Sololift2 C-3

Installation and operating instructions

be
think
innovate

GRUNDFOS

English (US) Installation and operating instructions

Original installation and operating instructions.

CONTENTS

		Page
1.	**Limited warranty**	**2**
2.	**Symbols used in this document**	**3**
3.	**General description**	**3**
4.	**Applications**	**3**
5.	**Pumped liquids**	**3**
6.	**Installation**	**3**
7.	**Electrical connection**	**4**
8.	**Service**	**4**
8.1	Service documentation	4
8.2	Maintenance	4
8.3	Service instructions	5
9.	**Technical data**	**6**
10.	**Fault finding**	**7**
11.	**Disposal**	**8**

Warning

Prior to installation, read these installation and operating instructions. Installation and operation must comply with national, state, and local regulations and accepted codes of good practice.

Warning

The use of this product requires experience with and knowledge of the product.
Persons with reduced physical, sensory or mental capabilities must not use this product, unless they are under supervision or have been instructed in the use of the product by a person responsible for their safety.
Children must not use or play with this product.

1. Limited warranty

Products manufactured by GRUNDFOS PUMPS CORPORATION (Grundfos) are warranted to the original user only to be free of defects in material and workmanship for a period of 24 months from date of installation, but not more than 30 months from date of manufacture. Grundfos' liability under this warranty shall be limited to repairing or replacing at Grundfos' option, without charge, FOB Grundfos' factory or authorized service station, any product of Grundfos' manufacture. Grundfos will not be liable for any costs of removal, installation, transportation, or any other charges which may arise in connection with a warranty claim. Products which are sold but not manufactured by Grundfos are subject to the warranty provided by the manufacturer of said products and not by Grundfos' warranty. Grundfos will not be liable for damage or wear to products caused by abnormal operating conditions, accident, abuse, misuse, unauthorized alteration or repair, or if the product was not installed in accordance with Grundfos' printed installation and operating instructions.

To obtain service under this warranty, the defective product must be returned to the distributor or dealer of Grundfos' products from which it was purchased together with proof of purchase and installation date, failure date, and supporting installation data. Unless otherwise provided, the distributor or dealer will contact Grundfos or an authorized service station for instructions.

Any defective product to be returned to Grundfos or a service station must be sent freight prepaid; documentation supporting the warranty claim and/or a Return Material Authorization must be included if so instructed.

GRUNDFOS WILL NOT BE LIABLE FOR ANY INCIDENTAL OR CONSEQUENTIAL DAMAGES, LOSSES, OR EXPENSES ARISING FROM INSTALLATION, USE, OR ANY OTHER CAUSES. THERE ARE NO EXPRESS OR IMPLIED WARRANTIES, INCLUDING MERCHANTABILITY OR FITNESS FOR A PARTICULAR PURPOSE, WHICH EXTEND BEYOND THOSE WARRANTIES DESCRIBED OR REFERRED TO ABOVE.

Some jurisdictions do not allow the exclusion or limitation of incidental or consequential damages and some jurisdictions do not allow limit actions on how long implied warranties may last. Therefore, the above limitations or exclusions may not apply to you. This warranty gives you specific legal rights and you may also have other rights which vary from jurisdiction to jurisdiction.

2. Symbols used in this document

Warning

If these safety instructions are not observed, it may result in personal injury.

Warning

The surface of the product may be so hot that it may cause burns or personal injury.

Caution

If these safety instructions are not observed, it may result in malfunction or damage to the equipment.

Note

Notes or instructions that make the job easier and ensure safe operation.

3. General description

The Sololift2 C-3 is a small, compact automatic lifting station suitable for pumping grey wastewater off places where it cannot be led directly to the sewer by means of a natural downward slope.

Caution

If you are away for a long period (e.g. holidays), we recommend that you turn off the water supply to the units served by the Sololift2 lifting station.

4. Applications

The product is suitable for pumping grey wastewater from a washing machine, dishwasher, kitchen sink, bath tub or shower.

Note

The product must be fastened to the floor to prevent uplift and turning.

5. Pumped liquids

Grey wastewater up to 194 °F (90 °C).

Ordinary liquids for cleaning of the appliances connected. pH value: 4-10.

Caution

The product must not pump harsh chemicals or solvents. See the Quick Guide.

6. Installation

Caution

Do not pull or lift the product by the power supply cable.

Note

We strongly recommend that you install an LC A2 alarm device (accessory) if a washing machine, dishwasher, bathtub and/or a shower are connected to the Sololift2 lifting station.

The LC A2 will emit an acoustic alarm and switch off the washing machine or dishwasher if the water level in the tank becomes too high.

Caution

We strongly recommend that you change the level switch for applications involving foaming wastewater. In this case please use the pressure switch with Grundfos product number 98144467.

Note

The product must be accessible for maintenance and repair.

The product must be placed in a frost-free room to prevent the pumped liquid from freezing.

Make sure that all external pipework is adequately insulated.

The discharge pipe must be made of rigid material, such as rigid PVC with solvent-welded joints, or copper.

To prevent the transmission of vibrations to buildings, make sure that the pipework is thoroughly fixed and that fittings cannot move and are not in contact with building parts.

7. Electrical connection

Make sure that the product is suitable for the power supply voltage and frequency available at the installation site.

The electrical connection must be carried out in accordance with local regulations.

Warning

The product must be grounded.

The installation must include an ELCB (Earth Leakage Circuit Breaker) for protection against ground fault currents. This will ensure protection when using a Schuko plug or another plug with grounding pin.

The product must be connected to a power supply switch with a minimum contact gap of 0.118 in. (3 mm) in all poles.

In case of overtemperature, a thermal switch cuts out the motor and cuts it in automatically when it has cooled sufficiently.

The required electrical connection is 115 V.

115 V

8. Service

Warning

The product must only be serviced by trained service personnel.

If the power supply cable is damaged, it must replaced by the manufacturer, the manufacturer's service partner or a similarly qualified person.

To ensure safe and reliable operation, always use original spare parts from Grundfos.

For service kits, see www.grundfos.us > Grundfos Product Center.

Note

The product must be thoroughly cleaned before it is returned for service. Otherwise the warranty will be void.

8.1 Service documentation

Service documentation is available at www.grundfos.us > Grundfos Product Center.

If you have any questions, please contact the nearest Grundfos company or service workshop.

8.2 Maintenance

The Sololift2 lifting station does not require any special maintenance, but we recommend that you check operation and pipe connections at least once a year.

Note

If the Sololift2 lifting station is connected to a washing machine or kitchen sink, we recommend that you check the float switch unit every six months for fibers and grease/fat.

Change the carbon filter once a year. See section *8.3 Service instructions*.

8.3 Service instructions

Thanks to the product design, service is easy in case of malfunction or blocked pump.

Digits in the following sections refer to the pictures in the Appendix at the end of this booklet.

Warning

The product may contain hot water.

The surface of the product may be so hot that it may cause burns or personal injury!

Warning

Before carrying out any service work, remove the fuse, pull out the plug, or switch off the power supply. Make sure that the power supply cannot be accidentally switched on.

All rotating parts must have stopped moving.

The product must only be serviced by trained service personnel.

Impeller stuck

1.1 Disconnect the power supply.

1.2 Unscrew the cover.

1.3 Turn the motor shaft to the right and left with a screwdriver inserted into the slot in the shaft end to free the impeller from dirt.

1.4 Fit the cover, and switch on the power supply to check if the impeller can rotate freely.

Operation by means of a power drill

2.1 If the product cannot be operated by electrical power, disconnect the power supply and empty the tank by means of a power drill.

Foreign body in tank

3.1 If the water level in the tank is above the motor flange, disconnect the power supply and drain the tank by means of the drain hose.

3.2 Unscrew the cover.

3.3 Remove the four screws of the motor flange.

3.4 Lift the motor flange to reduce the compression of the O-ring. Insert a screwdriver into the notch underneath the power supply cable and press it down.

3.5 Lift out the complete motor-pump unit by the handles.

Note ***Lift the unit vertically before tilting it!***

3.6 Check and clean the impeller, the protecting tube of the float switch and the tank.

Note ***Check that the float switch works properly before fitting the cover.***

Float switch pipe blocked

Note ***The float switch unit can be removed separately.***

If the water level in the tank is above the motor flange, disconnect the power supply and drain the tank by means of the drain hose. See Appendix 3.1.

- Unscrew the cover.
  - Turn the bayonet coupling 10 ° clockwise.
  - Pull out the float switch unit.
  - Press in the two tabs on the protecting tube.
  - Pull down the protecting tube.
- Check and clean the float switch pipe.

Note ***Check that the float switch works properly before fitting the cover.***

Note ***Lubricate the O-ring seat of the float switch in the motor flange for easier fitting.***

Carbon filter

Replace the carbon filter once a year to ensure sufficient filter function.

Note ***Instead of using a carbon filter, the Sololift2 can also be vented through a venting pipe. In this case a venting valve is needed. Grundfos product number: 98059587.***

9. Technical data

Power supply voltage
115 V, 60 Hz.

Power consumption
650 W.

Power factor
Cos φ 0.66 / 0.90.

Speed
3450 rpm.

Rated current
6.0 A.

Insulation class
F.

Noise level
< 70 dB(A) to 12050-2.

Flow rate
Max. 47 gpm (177 l/min).

System pressure
Max. pump head: 26.2 ft (8.0 m).
Max system head: 16.0 ft (5.0 m).

Note

The system pressure should not exceed 16.0 ft (5.0 m) head to guarantee a sufficient drain of the connected sanitary appliances.

Power supply cable
Power supply cable length 4.9 ft (1.5 m).
90 ° angle plug (115 V).

Net weight
14.5 lb (6.6 kg).

Start and stop levels
Start level 1: 2.5 in. (65 mm) above floor level.
Start level 2: 4.5 in. (115 mm) above floor level.
Stop level: 1.4 in. (35 mm) above floor level.

Liquid temperature
167 °F (75 °C) continuously.
194 °F (90 °C) for 30 min.

Ambient temperature
41 °F (5 °C) to 95 °F (35 °C).

Duty
S3 - 50 % - 1 min. (30 sec. on; 30 sec. off).

Marking

CE

Approvals

C US
MEETS UPC

10. Fault finding

Warning
Remove the fuse, pull out the plug, or switch off the power supply.
Make sure that the power supply cannot be accidentally switched on.
All rotating parts must have stopped moving.
The product must only be serviced by trained service personnel.

See also section *8.3 Service instructions*.

Fault	Cause	Remedy
1. Motor does not start when the level in the tank reaches the start level.	a) Power supply failure.	Reestablish the power supply.
	b) Fuse blown. If new fuse blows at once, either power supply cable or motor is faulty.	Replace the fuse. Measure the amp draw across the power supply cable and motor leads. If cable or motor is defective, replace the defective parts.
	c) Impeller stuck. Thermal switch tripped.	Free the impeller, and wait until the motor is cooled down and the thermal switch has reset.
	d) Float switch stuck.	Remove the float switch and clean the pipe.
2. Motor hums but does not operate.	a) Impeller stuck.	Free the impeller and check that it can rotate freely.
	b) Motor or capacitor defective.	Replace the motor or capacitor.
3. Motor runs continuously or at irregular intervals.	a) Water leaking from inlet into tank.	Check for leaking appliances.
	b) Water leaking back into tank from discharge pipe.	Check the non-return flap.
	c) Float switch defective or stuck.	Clean the float switch unit or replace it, if necessary.
4. Motor runs but does not evacuate water.	a) Pump or tank blocked.	Remove blockage.
	b) Air lock in pump or vent hole in pump housing blocked.	Check operation of vent valve in the tank. Check that the carbon filter is not wet. Check that the vent hole in the pump housing is not blocked.
	c) Discharge port or pipe blocked.	Remove blockage. Check the non-return flap.
5. The Sololift2 lifting station evacuates slowly.	a) Discharge pipe is too long or has an excessive number of bends.	Increase the discharge pipe size (maximum 1.5 in. (40 mm)). Change pipework to reduce number of bends. Change bends to soft bends.
	b) The pump housing is leaky.	Replace the pump housing (service part).
	c) Hydraulics blocked.	Check that the motor shaft can rotate freely. Remove the motor flange to clean the impeller.
6. Rattling noise from the Sololift2 lifting station, but water is evacuated.	a) Foreign body hitting the impeller.	Remove the foreign body.
7. Odor from the tank.	a) Carbon filter contaminated.	Replace the carbon filter.

Fault	Cause	Remedy
8. Water from shower or another appliance connected to the lower inlets drains off slowly. Backflow from the Sololift2 lifting station.	a) Hydraulics blocked.	Check that the motor shaft can rotate freely. Remove the motor flange to clean the impeller.
	b) The start level has changed.	Check and clean the float switch pipe.
	c) Inlet pipe diameter is too small.	Use a pipe with a larger diameter.

11. Disposal

This product or parts of it must be disposed of in an environmentally sound way:

1. Use the public or private waste collection service.
2. If this is not possible, contact the nearest Grundfos company or service workshop.

Subject to alterations.

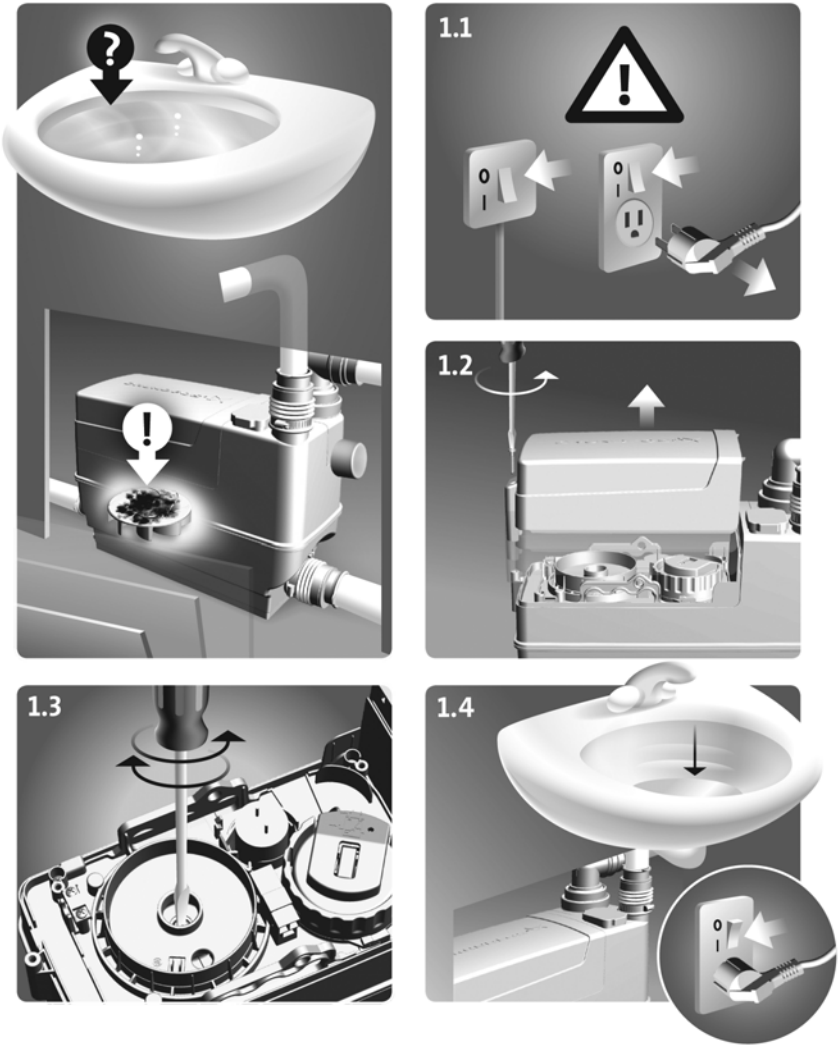
1.1
1.2
1.3
1.4

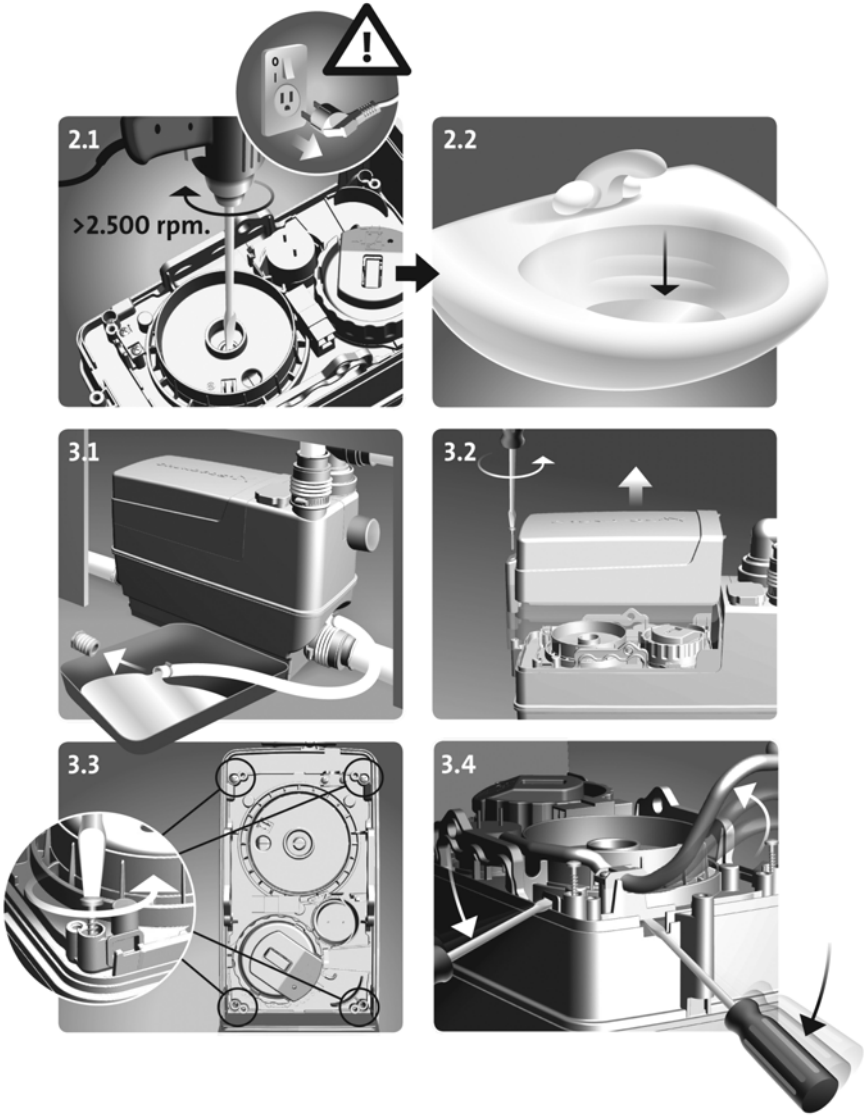
2.1
>2.500 rpm.
2.2
3.1
3.2
3.3
3.4

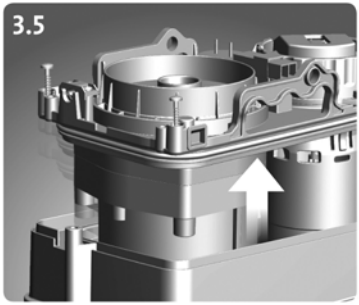
3.5

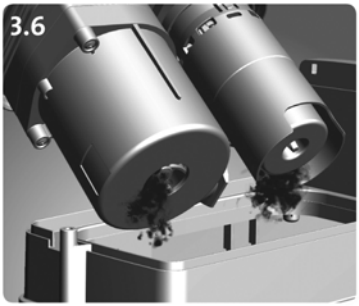
3.6

GRUNDFOS Kansas City
17100 West 118th Terrace
Olathe, Kansas 66061
Phone: (913) 227-3400
Fax: (913) 227-3500

www.grundfos.us

GRUNDFOS Canada
2941 Brighton Road
Oakville, Ontario L6H 6C9 Canada
Phone: +1-905 829 9533
Telefax: +1-905 829 9512

www.grundfos.ca

GRUNDFOS México
Boulevard TLC No. 15
Parque Industrial Stiva Aeropuerto
C.P. 66600 Apodaca, N.L. México
Phone: 011-52-81-8144 4000
Fax: 011-52-81-8144 4010

www.grundfos.mx

© Copyright Grundfos Holding A/S

The name Grundfos, the Grundfos logo, and **be think innovate** are registered trademarks owned by Grundfos Holding A/S or Grundfos A/S, Denmark. All rights reserved worldwide.

98870921 0715

ECM: 1162228