GRUNDFOS **INSTRUCTIONS**

Sololift2 WC-3

115V/60Hz

be think innovate

GRUNDFOS

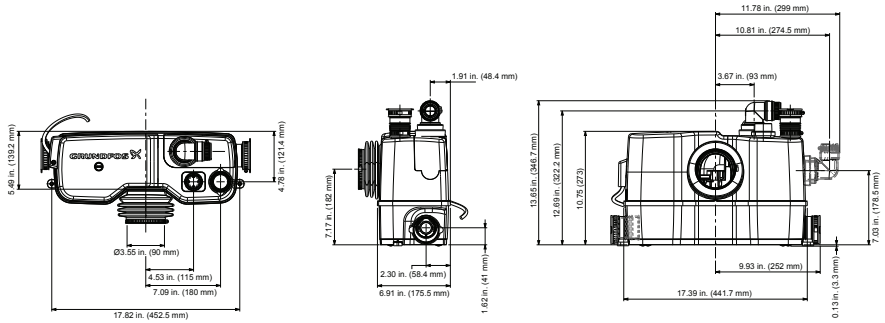
5.49 in. (139.2 mm)
4.78 in. (121.4 mm)
Ø3.55 in. (90 mm)
4.53 in. (115 mm)
7.09 in. (180 mm)
17.82 in. (452.5 mm)
1.91 in. (48.4 mm)
7.17 in. (182 mm)
2.30 in. (58.4 mm)
6.91 in. (175.5 mm)
1.62 in. (41 mm)
11.78 in. (299 mm)
10.81 in. (274.5 mm)
3.67 in. (93 mm)
13.65 in. (346.7 mm)
12.69 in. (322.2 mm)
10.75 (273)
9.93 in. (252 mm)
17.39 in. (441.7 mm)
0.13 in. (3.3 mm)
7.03 in. (178.5 mm)

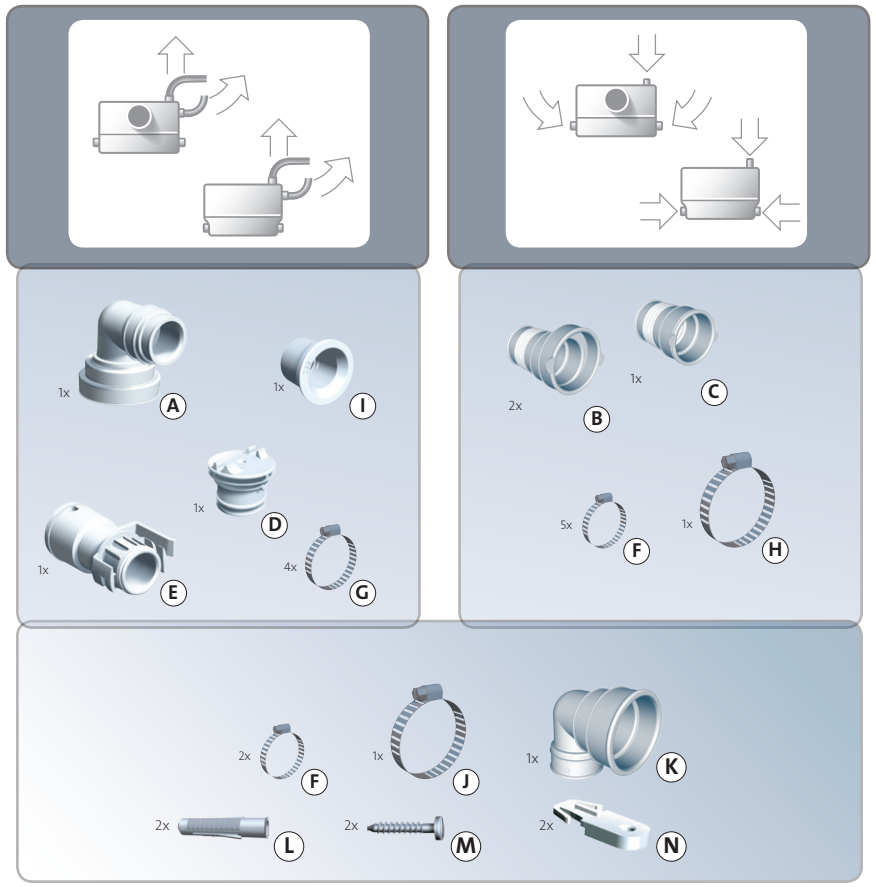
1x A
1x I
1x D
1x E
4x G
2x B
1x C
5x F
1x H
2x F
1x J
1x K
2x L
2x M
2x N

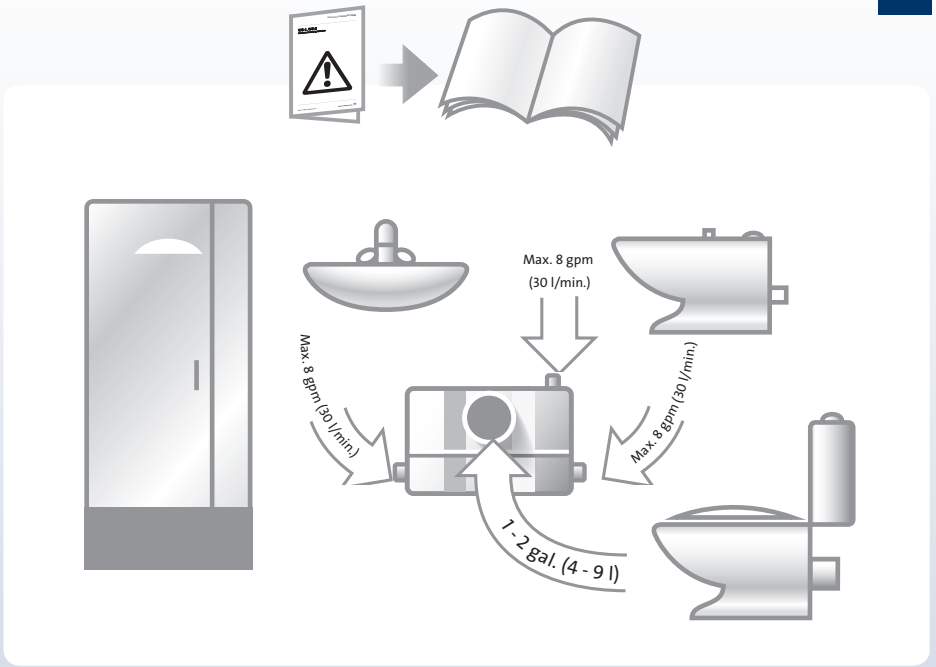
Max. 8 gpm
(30 l/min.)
Max. 8 gpm (30 l/min.)
Max. 8 gpm (30 l/min.)
1 - 2 gal. (4 - 9 l)

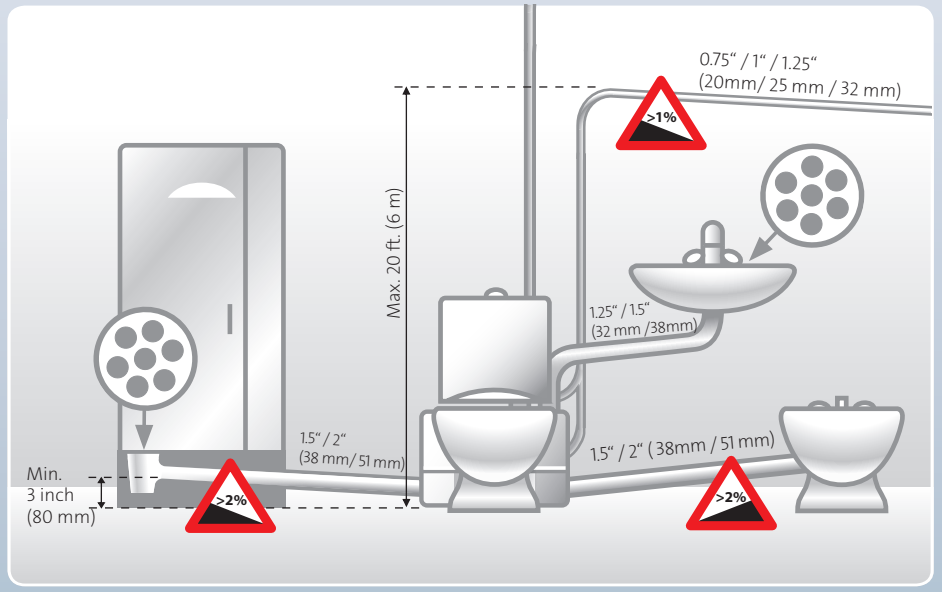
0.75" / 1" / 1.25"
(20mm/ 25 mm / 32 mm)
>1%
Max. 20 ft. (6 m)
1.25" / 1.5"
(32 mm /38mm)
1.5" / 2"
(38 mm/ 51 mm)
1.5" / 2" (38mm / 51 mm)
Min.
3 inch
(80 mm)
>2%
>2%

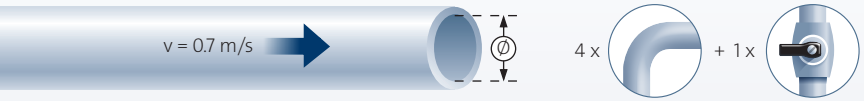

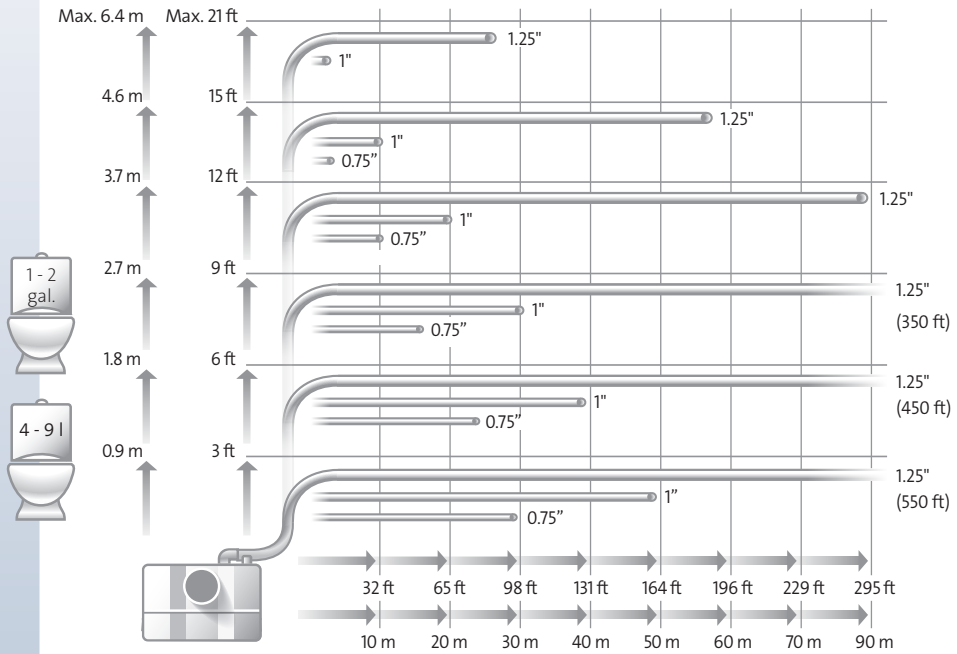

0.75"" inner-Ø 0.804 inch
1" inner-Ø 1.029 inch
1.25" inner-Ø 1.36 inch

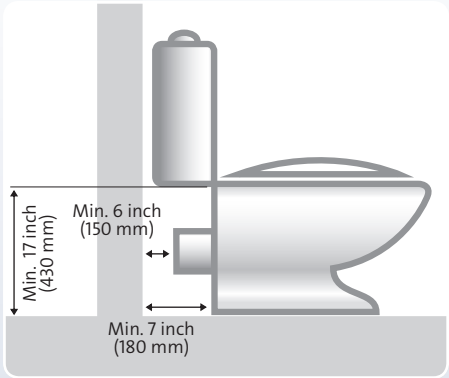

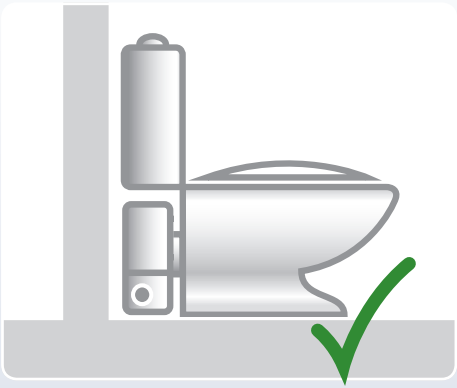

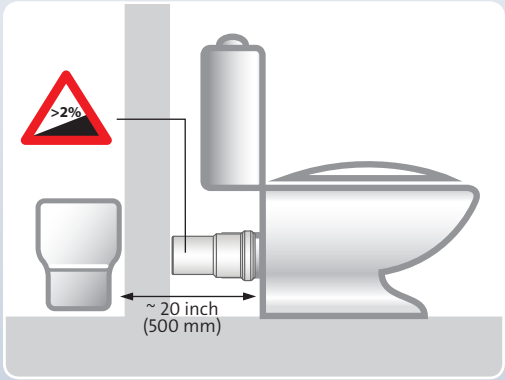

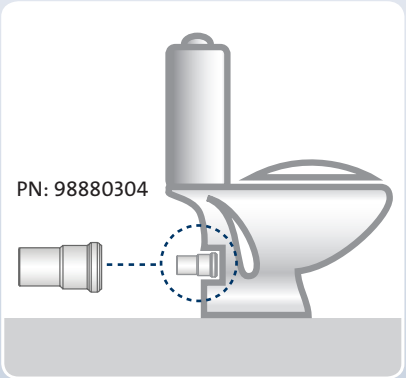

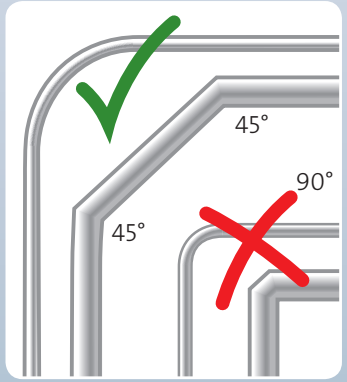

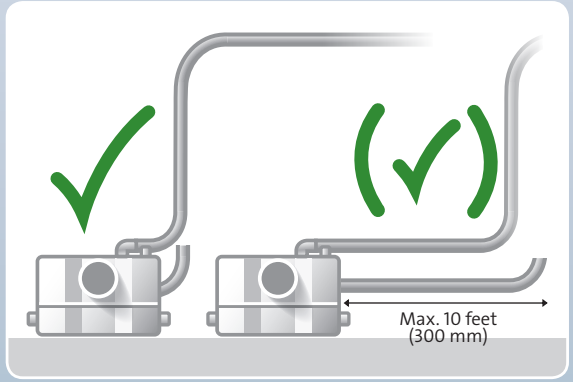

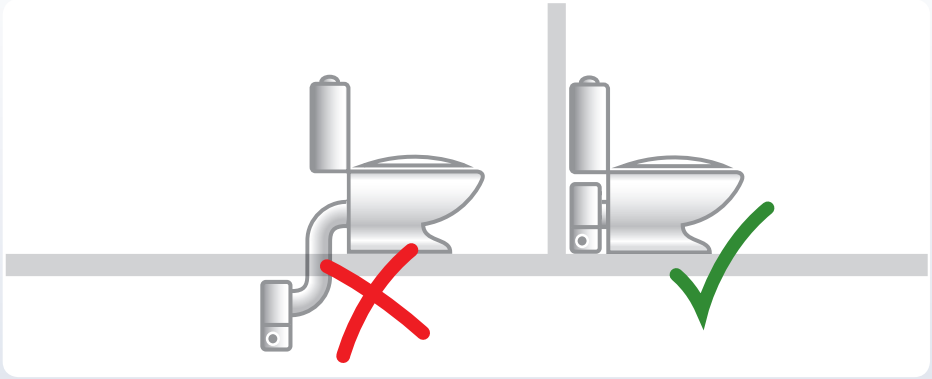

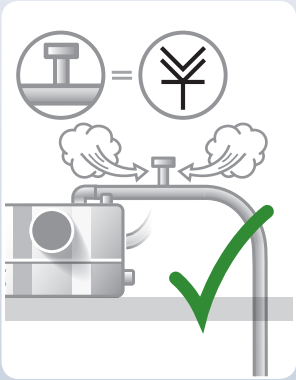

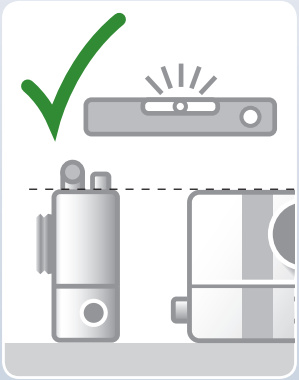

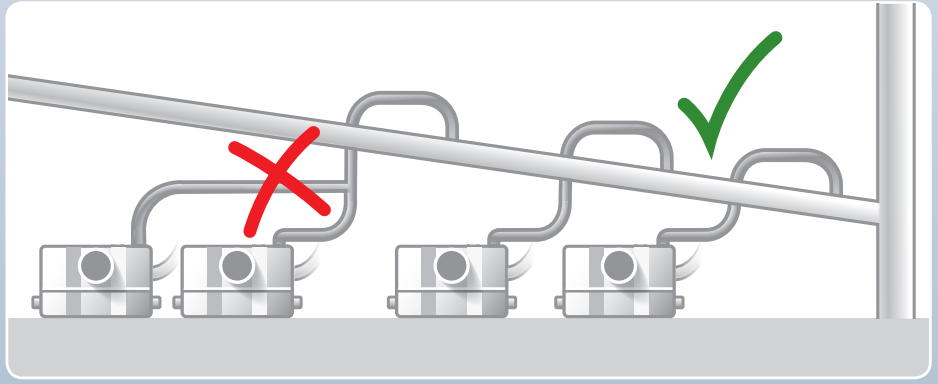

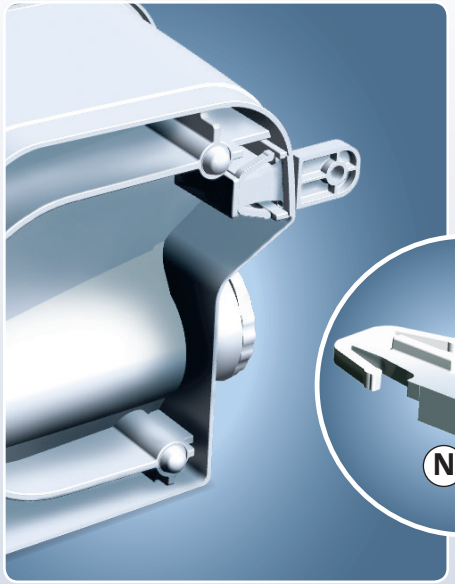

M
L
N

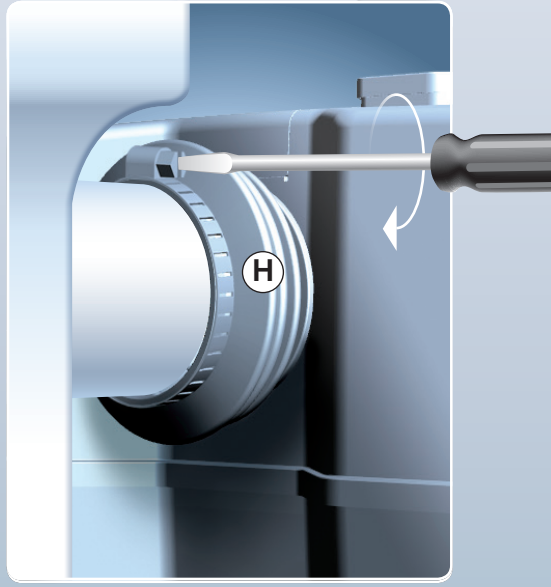
H

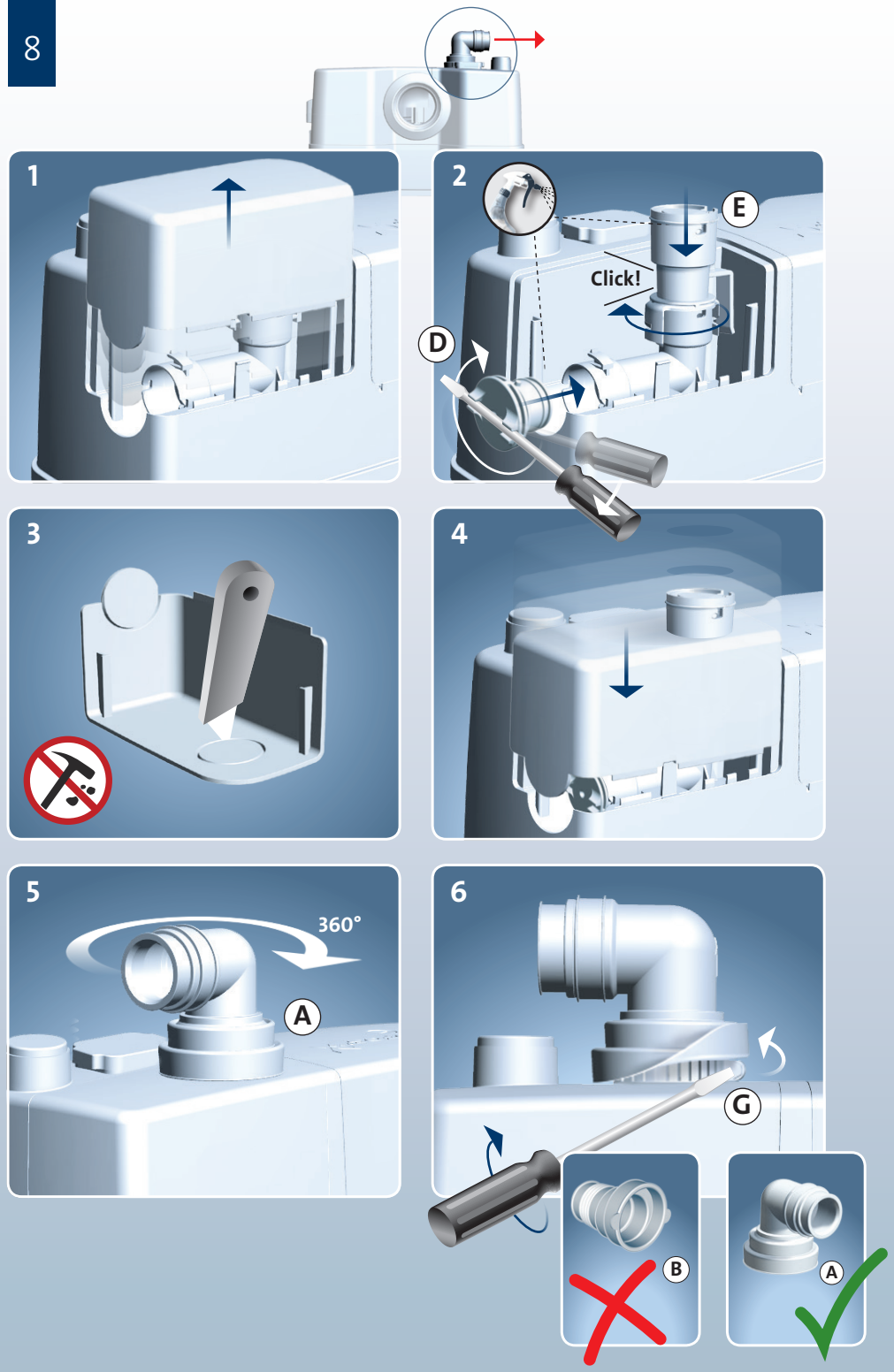
1
2
E
Click!
D
3
4
5
360°
A
6
G
B
A

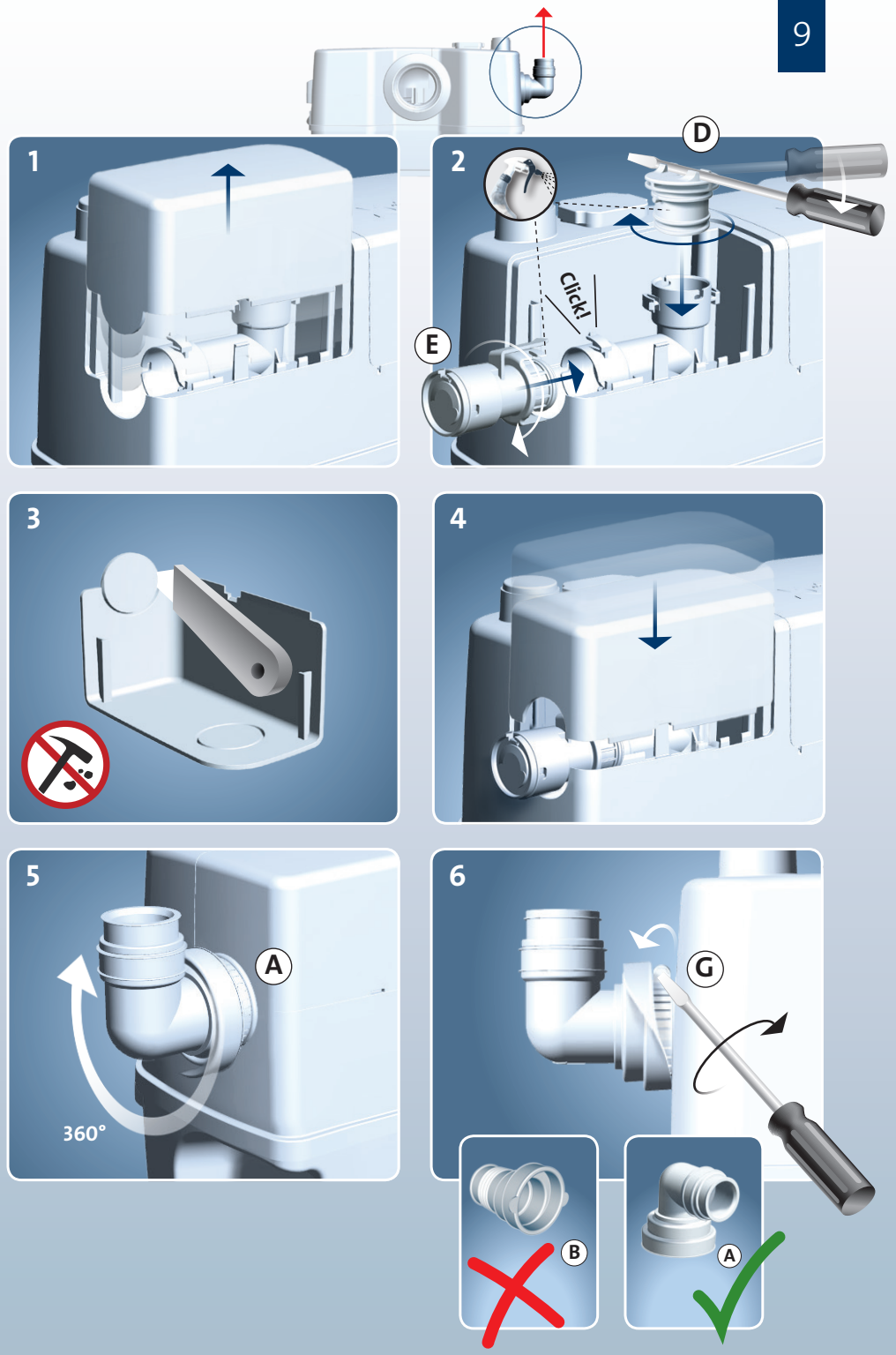
1
2
D
Click!
E
3
4
5
A
360°
6
G
B
A

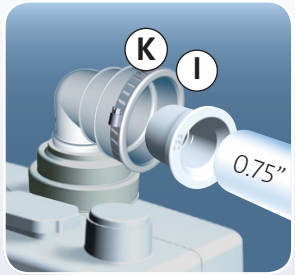
K
I
0.75”

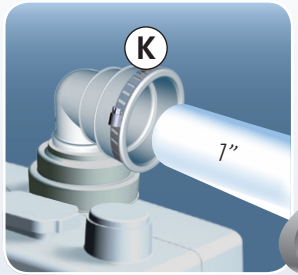
K
1”

K
1.25“

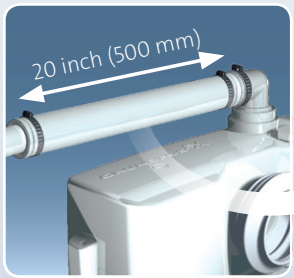
20 inch (500 mm)

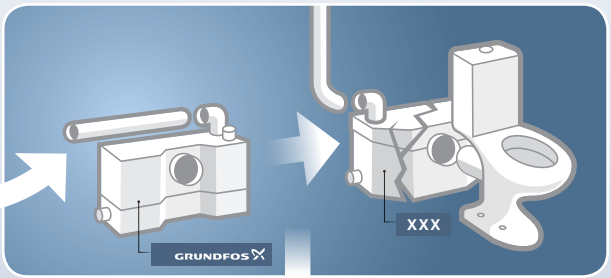
GRUNDFOS
XXX

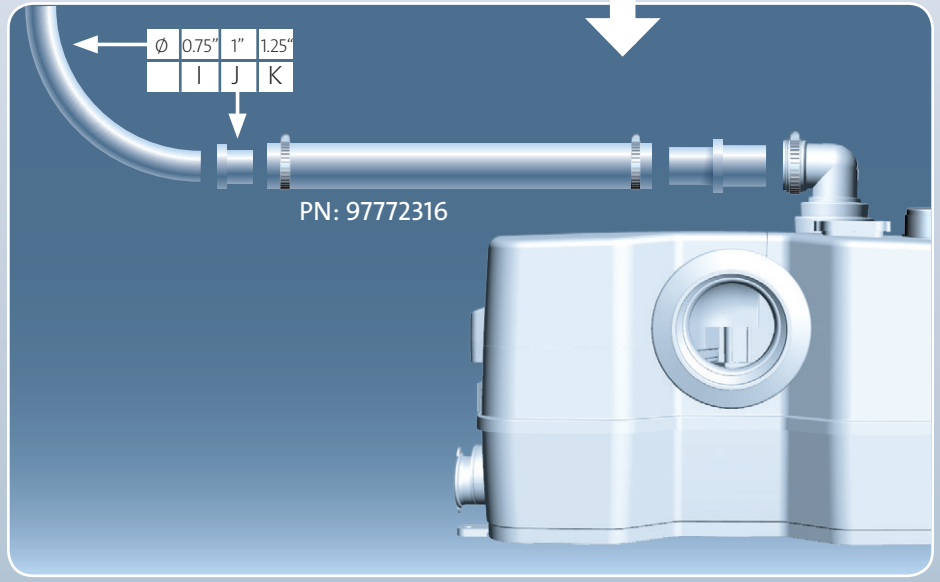
Ø
0.75”
1”
1.25”
I
J
K
PN: 97772316

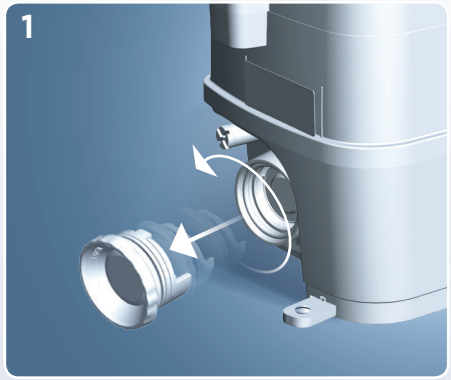
1

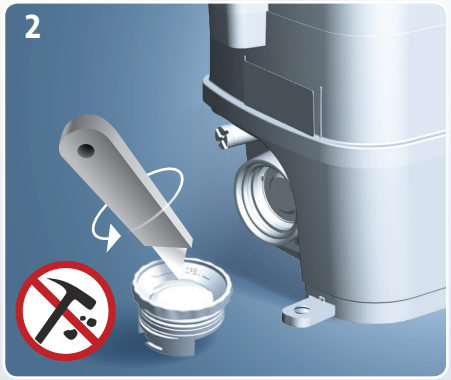
2

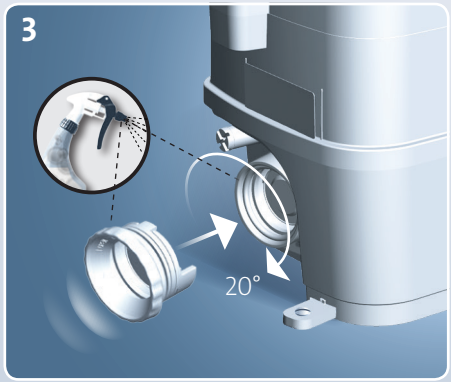
3
20°

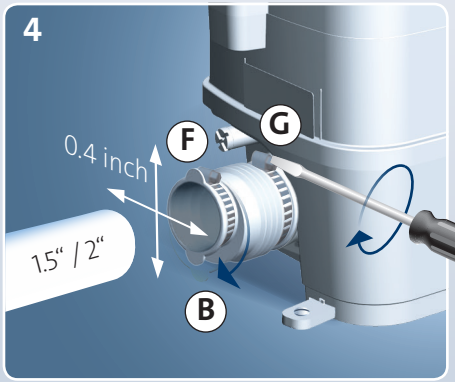
4
0.4 inch
F
G
1.5“ / 2“
B

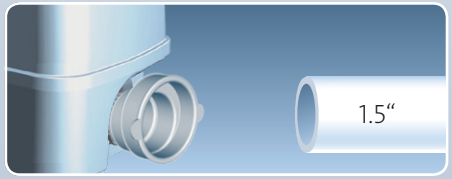
1.5“

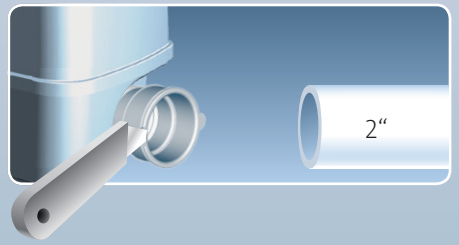
2“

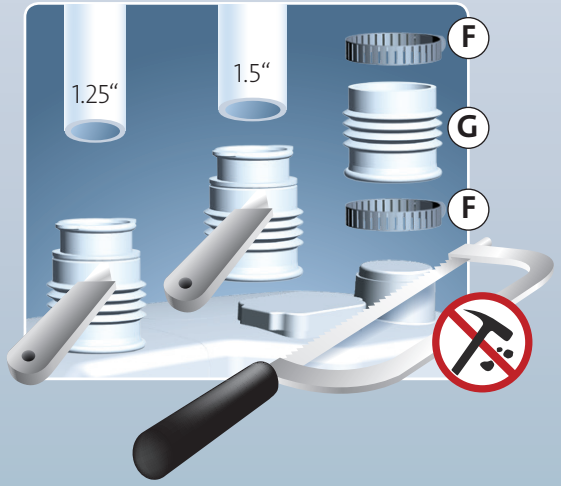
1.25“
1.5“
F
G
F

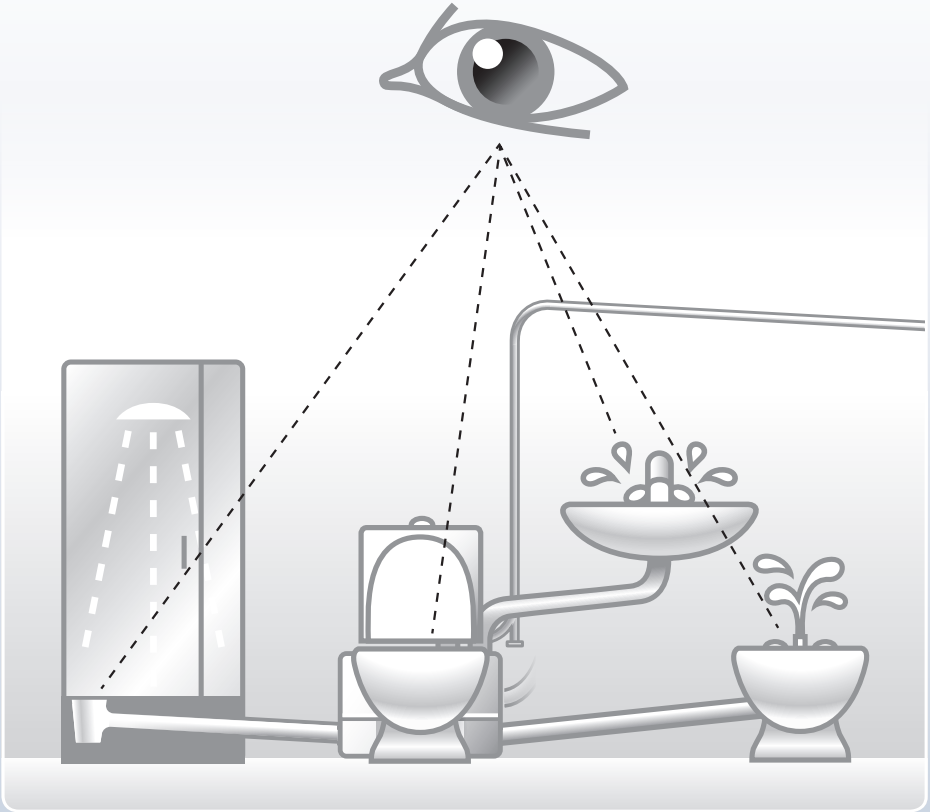

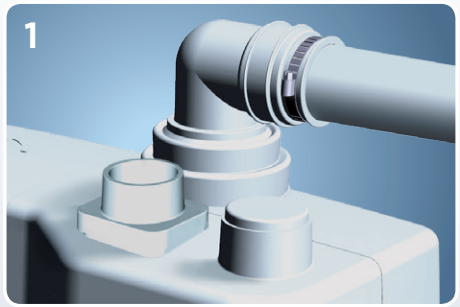
1

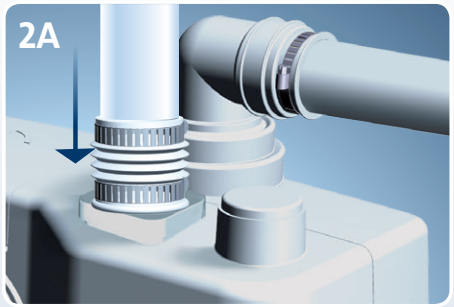
2A

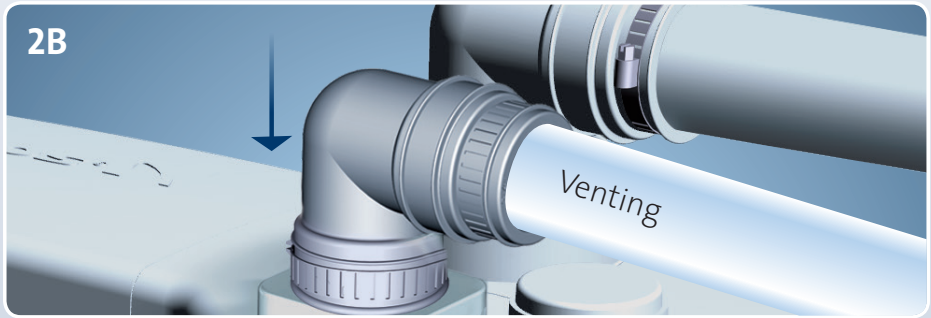
2B
Venting

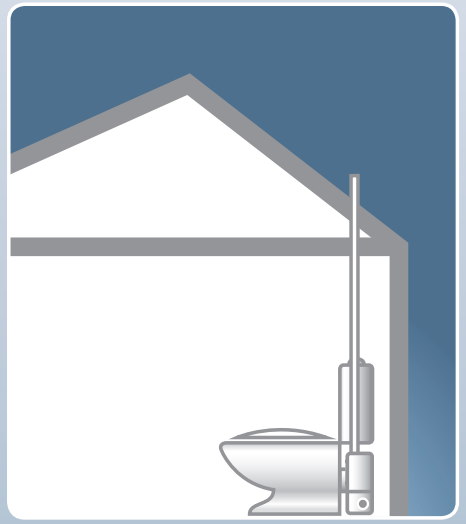

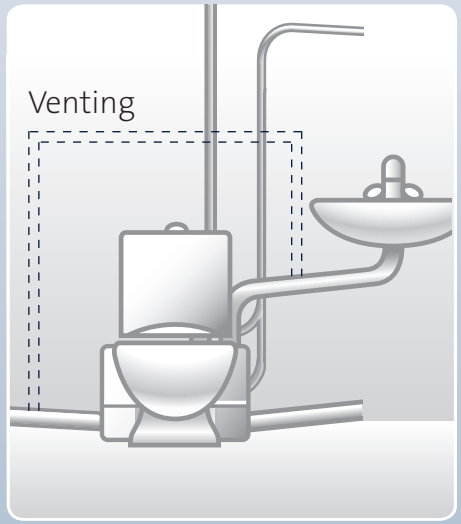
Venting

GRUNDFOS Kansas City
17100 West 118th Terrace
Olathe, Kansas 66061
Phone: (913) 227-3400
Fax: (913) 227-3500

www.grundfos.us

GRUNDFOS Canada
2941 Brighton Road
Oakville, Ontario L6H 6C9
Canada
Phone: +1-905 829 9533
Telefax: +1-905 829 9512

www.grundfos.ca

GRUNDFOS Mexico
Boulevard TLC No. 15
Parque Industrial Stiva
Aeropuerto
C.P. 66600 Apodaca, N.L. Mexico
Phone: 011-52-81-8144 4000
Fax: 011-52-81-8144 4010

www.grundfos.mx

98821871 0515

ECM: 1158378

The name Grundfos, the Grundfos logo, and the payoff Be–Think–Innovate are registrated trademarks owned by Grundfos Management A/S or Grundfos A/S, Denmark. All rights reserved worldwide.

be think innovate

GRUNDFOS