Polydos 412A

Polymer preparation systems

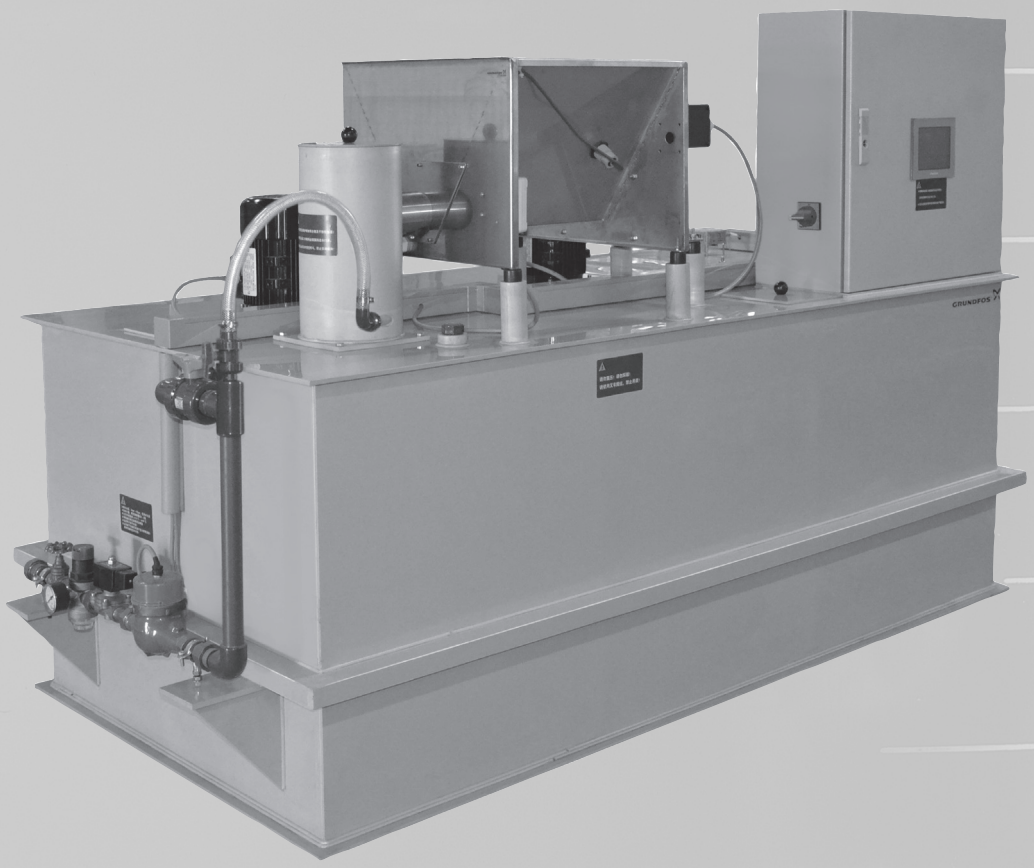

be
think
innovate

GRUNDFOS

Table of contents

1. General **3**
Drinking water treatment . . . 3
Applications . . . 3
Introduction . . . 4

2. Identification **5**
Type key . . . 5

3. Components **6**
Dry-material feeder . . . 6
Jet mixer . . . 6
Tank . . . 6
Stirrer . . . 6
Ultrasonic level sensor . . . 6
Control panel . . . 6
Water inlet . . . 6

4. Construction **7**

5. Function **8**
Functional principle . . . 8

6. Dimensions **9**
Connections . . . 9

7. Technical data **10**
Polydos 412A . . . 10
Dry-material feeder S423-2 . . . 10
Motor types for stirrers . . . 11
Control panel . . . 12
Water inlet . . . 12

8. Product selection **13**
Polydos 412A capacity range . . . 13
Polydos 412A-500 . . . 14
Polydos 412A-1000 . . . 15
Polydos 412A-2000 . . . 16
Polydos 412A-4000 . . . 17
Polydos 412A-6000 . . . 18
Poyldos 412A-10000 . . . 19

9. Accessories **20**
Post-dilution device . . . 20
Dosing skid . . . 21
Accessories for all installations . . . 22
Accessories for storage in silos . . . 22

10. Spare parts **23**

11. Grundfos Product Center **24**

1. General

Drinking water treatment

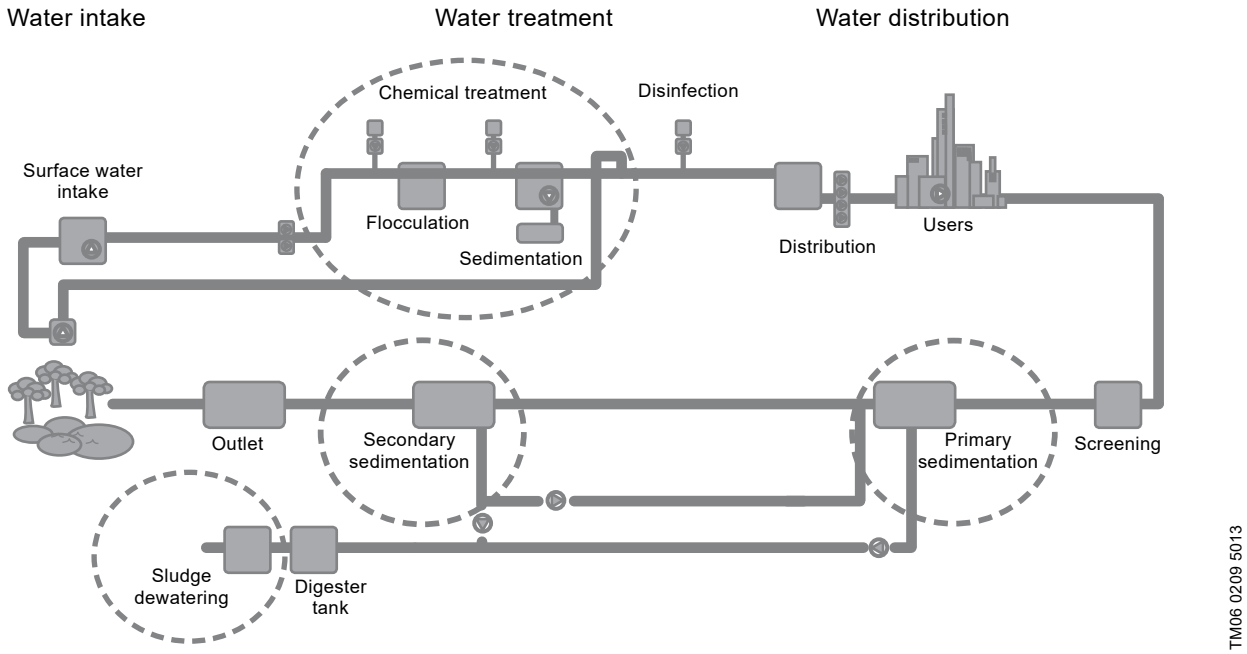

Fig. 1 Drinking water treatment

Polymer/PAM solution is used as flocculation and coagulation agent in industrial and municipal water treatment processes.

Polymers/PAM are usually provided as powder that needs to be prepared. Specifically, Polymers need time to unwind their chains, so they can "catch" more particles. The preparation process changes from one polymer to another and can take from 10 minutes to 2 hours.

Polydos 412A are fully automatic systems for the continuous preparation of dry polymer in a concentration set at the control panel.

A Polydos 412A system includes:

- Tank with 3 chambers separated by single walls: mixing, maturing and storage. Each chamber is fitted with an electric stirrer.
- Dry-material feeder and jetmixer
- Water inlet with shut-off valve, solenoid valve, pressure reducing valve and contact water meter
- Multilingual Siemens PLC with touch screen. Solutions from 0.05 % to 0.5 % and viscosities up to 2500 mPas can be prepared.

The Polydos 412A product range covers 288 variants to match the most usual needs and requirements. Grundfos is also capable of engineering special designs for our customers. If you have requirements that are not met by the standard range, please contact your local Grundfos representative to acquire engineered solutions.

Furthermore, Grundfos can supply solutions for the preparation of other dry chemicals for water treatment, such as lime and activated carbon. For more detailed information about these systems, please contact your local Grundfos representative.

Applications

- Drinking water treatment
- Waste water treatment
- Sludge treatment
- Process and circulation water treatment
- Pulp and paper
- Power plants.

Introduction

Polydos 412A are fully automatic systems for the continuous preparation of dry polymer in a concentration set at the control panel. The polymer/PAM has to be diluted with water in a concentration set at the control panel. The maturing time for a polymer/PAM solution depends on the extraction quantity and the capacity of the Polydos system.

Features and benefits

- Jet mixer with injector-effect: Perfectly homogeneous dilution of polymer/PAM powder
- Plug-flow operating principle: Continuous operation with a siphon lock - fresh polymer/PAM cannot flow directly into the storage chamber
- Flexibility in tank material: Design for application
- Broad accessory range: Design for application
- Flexibility of positioning: Flexible installation
- 7" true-colour touch screen with smart S7-200 PLC: Best accuracy in solution control
- Profibus-DP, Modbus, Ethernet: Flexible integration into central controls
- Contactless ultrasonic sensor for continuous level control in storage chamber: Reliable automatic process
- Perfect match with post-preparation equipment, e.g. dosing skid systems: Easy configuration and commissioning
- Ability to engineer-to-order: Customers get custom-tailored solutions
- Shaftless screw: robust and non-logging dry-material feeding.

2. Identification

Type key

Example: PD412A-500 PP-A-RML

Type	
PD412A-500 PP-A-RML	

Capacity level	
PD412A-**500** PP-A-RML	
500	500 l/h
1000	1000 l/h
2000	2000 l/h
4000	4000 l/h
6000	6000 l/h
10000	10000 l/h

Tank material	
PD412A-500 **PP**-A-RML	
SS	Stainless steel 304 (AISI)
PP	PPH

Power supply	
PD412A-500 PP-**A**-RML	
A	400 VAC, 50 Hz
C	460 VAC, 60 Hz

Position of control panel	
PD412A-500 PP-A-**R**ML	
R	Right side
L	Left side

Fieldbus support	
PD412A-500 PP-A-R**M**L	
M	Modbus RTU
I	Profibus-DP
E	Ethernet (Modbus TCP)

Type of loading	
PD412A-500 PP-A-RM**L**	
L	With lid, prepared for vacuum loader
G	Prepared for star-wheeled feeder

3. Components

The Polydos 412A system consists of a selected combination of these modules:

- Dry-material feeder
- Water inlet
- Jet mixer
- Tank
- Stirrers
- Ultrasonic level sensor
- Control panel
- Water inlet.

All components are pre-assembled. The motors and control panel comply with IP55 rating.

Dry-material feeder

The dry-material feeder can be operated with constant or varying quantities of powders. It is equipped with a 32 l hopper with shaftless screw for constant discharge, and a heating to avoid humidity lumps in the hopper .

- Power consumption: 250 W
- Material: stainless steel 304 (AISI).

Jet mixer

The jet mixer is specially designed to produce a depression during operation (injector effect). This optimises the suction of the dry polymer, prevents the obstruction of the jet mixer, and guarantees the best wetting of the polymer.

Tank

The tank has three chambers. In the mixing chamber (chamber I), the polymer is mixed with water. In the maturing chamber (chamber II), the polymer solution matures. In the storage chamber (chamber III), the polymer solution is stored before withdrawal.
The partition between chambers prevents the amalgamation of the different solution phases, enables a constant withdrawal and guarantees the homogeneity of the solution. In chamber III, the ultrasonic level sensor is installed to control the start and stop of the preparation process. A ball valve connects chamber II with chamber III. The overflow is connected to the draining pipe.

- Material: PPH or stainless steel 304 (AISI).

Stirrer

The Polydos 412A has three stirrers, one in each chamber. The stirrer shafts are made of stainless steel 304 (AISI).

Different motor types are available:

- Power consumption of 0.37 to 2.2 kW at 50 Hz
- Power consumption of 0.4255 to 2.5 kW at 60 Hz.

Ultrasonic level sensor

The contactless and maintenance-free ultrasonic sensor measures the solution level continuously to set the minimum and maximum thresholds for starting and stopping the automatic preparation process.

Power supply: 24 VDC

Signal output: 0-10 V mA

Measurement range: 60-2000 mm.

Control panel

The Polydos 412A has a control panel with these functions:

- 7-inch true-colour touch screen with smart S7-200 PLC
- Manual control override
- Remote on-off
- Emergency stop button
- Multilingual graphic interface
- Dry contact outputs for system fault, system operating status, lack of dry material and dry-run
- Communication platform of Modbus RTU, Profibus-DP or Ethernet
- Power supply for vacuum loader
- Operation languages: English, Chinese, Russian and Ukrainian

Water inlet

The water inlet is equipped with shut-off valve, pressure reducing valve with gauge, electric solenoid valve and flowmeter to supply the system with dissolving water. The pressure reducing valve is equipped with manometer and dirt trap. The solenoid valve automatically opens and closes the water inlet.

- Material of water inlet: uPVC and brass
- Pressure reducing valve: 1.5 up to 6 bar
- Electric solenoid valve: 24 VDC, 30 W
- Flow rate of flow meter range
  - Minimum: 100 l/h
  - Maximum: 30000 l/h.

4. Construction

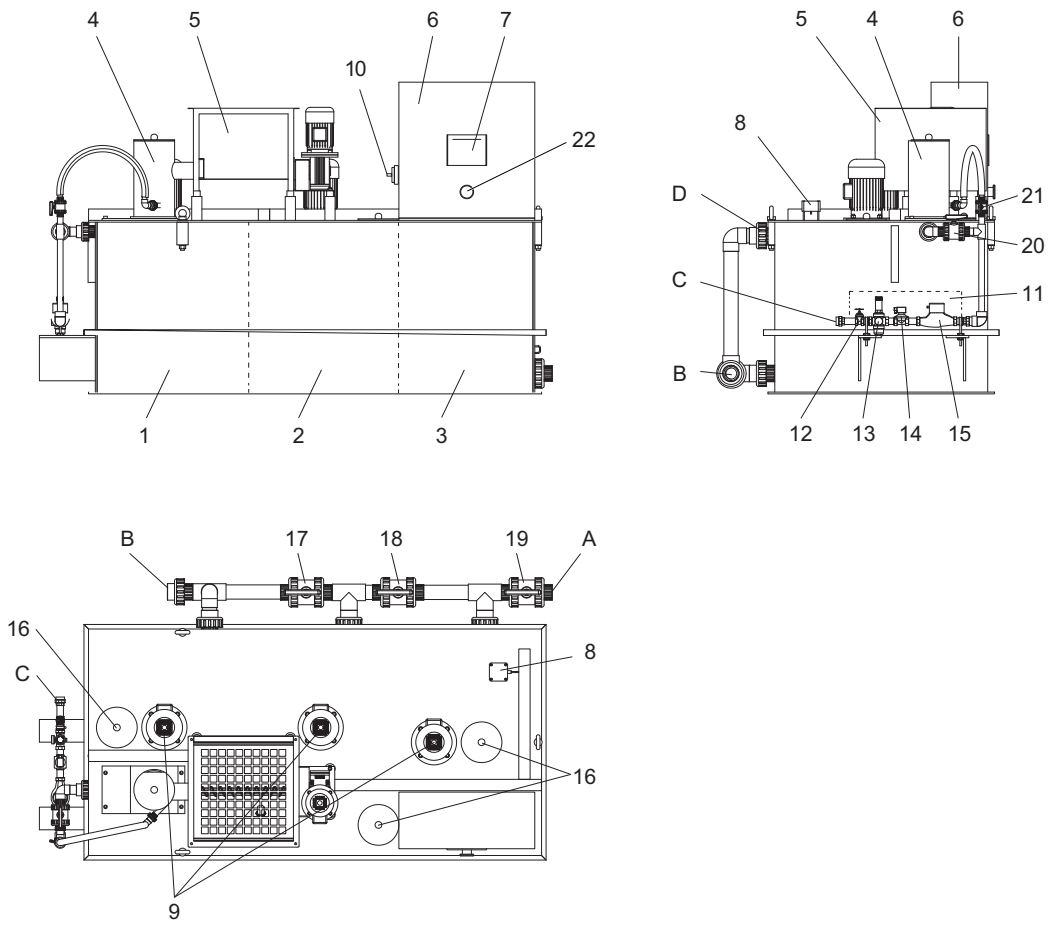

Fig. 2 Example: Polydos 412A-1000

Pos.	Description	Pos.	Description
1	Mixing chamber	15	Flowmeter
2	Maturing chamber	16	Inspection holes
3	Storage chamber	17	Ball valve
4	Jet mixer	18	Ball valve
5	Dry-material feeder	19	Ball valve
6	Control panel	20	Ball valve
7	Touch screen	21	Ball valve
8	Ultrasonic level sensor	22	Emergency stop
9	Stirrers		
10	Mains switch		
11	Water inlet	A	Withdrawal connection
12	Shut-off valve	B	Drain connection
13	Pressure reducing valve	C	Operation water connection
14	Solenoid valve	D	Overflow connection

5. Function

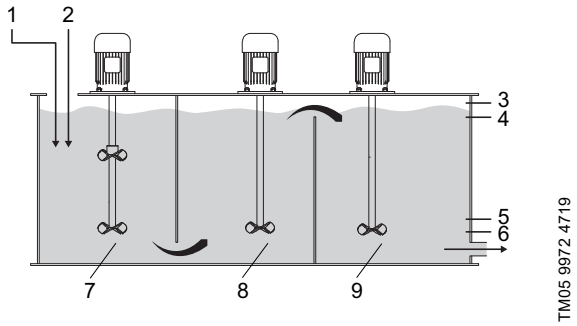

Fig. 3 Functional scheme

Pos.	Description
1	Polymer
2	Water
3	Max. level alarm
4	Max. level
5	Min. level
6	Min level alarm
7	Mixing chamber (chamber I)
8	Maturing chamber (chamber II)
9	Storage chamber (chamber III)

Functional principle

- The desired polymer concentration, the dry material quantity and the water flow are set at the control panel.
- When the minimum level in the storage chamber (chamber III) is reached, the level sensor sends a signal to the control panel.
- The solenoid valve is opened, water flows into the mixing chamber (chamber I).
- The dry-material feeder switches on. It conveys the set dry polymer quantity into the jet mixer, in proportion to the set water quantity.
- In the jet mixer, the polymer powder is wetted with water and sucked into the mixing chamber due to the injector effect.
- In the mixing chamber, the polymer is mixed with water by a stirrer.
- When a certain filling level is reached, the highly viscous mixture flows into the maturing chamber (chamber II), where it is mixed by a stirrer.
- The mature solution then flows into the storage chamber. In the storage chamber, the solution is mixed by a stirrer.
- When maximum level is reached in the storage chamber, the level sensor sends signal to the control panel. Then solenoid valve is closed and dry-material feeder switches off.

A downstream dosing station doses the polymer solution into the process.

6. Dimensions

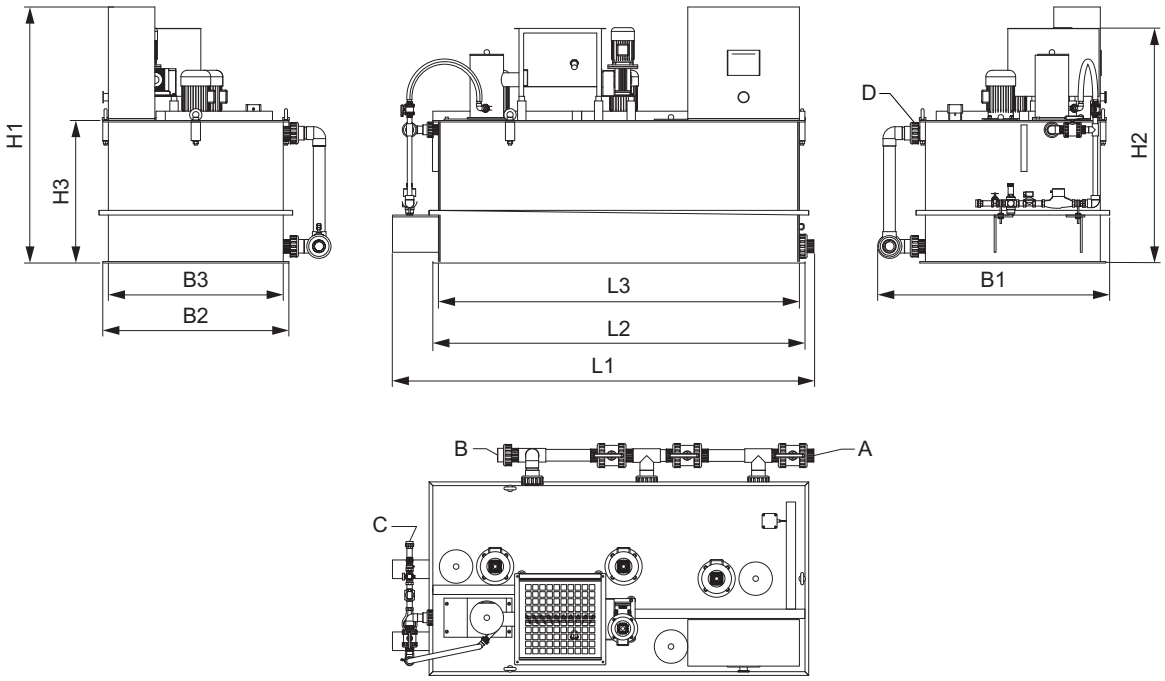

Fig. 4 Example: Polydos 412A-1000

Polydos	Measurements in mm								
	B1	B2	B3	H1	H2	H3	L1	L2	L3
412A-500	~915	750	690	~1376	~1306	766	~1747	1500	1450
412A-1000	~1247	1000	940	~1376	~1261	766	~2264	2000	1940
412A-2000	~1247	1000	940	~1776	~1661	1166	~2264	2000	1940
412A-4000	~1308	1000	940	~2130	~2015	1520	~3265	3000	2940
412A-6000	~1823	1500	1440	~2130	~2015	1520	~3265	3000	2940
412A-10000	~2182	1800	1740	~2130	~2015	1520	~4266	4000	3940

Connections

Polydos		412A-500	412A-1000	412A-2000	412A-4000	412A-6000	412A-10000
A	Withdrawal connection	DN 32	DN 50	DN 50	DN 65	DN 65	DN 80
B	Drain connection	DN 32	DN 50	DN 50	DN 65	DN 65	DN 80
C	Operation water connection	DN 20	DN 20	DN 25	DN 40	DN 40	DN 50
D	Overflow connection	DN 32	DN 50	DN 50	DN 65	DN 65	DN 80

7. Technical data

Polydos 412A

Polydos	Maturing time [min]	Maximum preparation capacity [l/h]	Weight [kg]	Power consumption [kW] 50 Hz	Power consumption [kW] 60 Hz
412A-500	45	700	220	1.2	1.4
	60	500			
412A-1000	45	1300	250	1.9	2.1
	60	900			
412A-2000	45	2100	330	1.9	2.1
	60	1600			
412A-4000	45	4000	520	2.1	2.5
	60	3000			
412A-6000	45	6200	610	4.9	5.7
	60	4700			
412A-10000	45	10000	820	6.7	8.3
	60	7500			

Dry-material feeder S423-2

- Dry-material feeder for constant dosing quantities
- Outlet nozzle with heating 115/230 V, 50 Hz, ca. 60 W.
- Motor type: MMG071MA-4, AC, 3-phase, 4-pole.
- Diameters of the metering screws: 30 mm. 40 mm, 60mm.

Fig. 5 Dry-material feeder

Dosing capacity	[kg/h]	5-750 (depending on material)
Accuracy	[%]	± 4
Content/hopper	[l]	32
Material		Shaftless screw and hopper: SS 304
Weight	[kg]	28

Shaftless screw including ejection pipe with calorific protection zone

- Diameter 40 mm
- Diameter 50 mm
- Diameter 70 mm

Gear step-down ratio

- i = 20:1
- i = 40:1
- i = 80:1

Technical data

Polydos	Power [kW]	Voltage/Current [V/A]	Frequency [Hz]	Speed [rpm]	Enclosure class	Standard	Capacity [kg/h]
412A-500	0.25	400/0.7	50	1380	IP54	IEC60034	10
	0.288	460/0.67	60	1680			12
412A-1000	0.25	400/0.7	50	1380	IP54	IEC60034	20
	0.288	460/0.67	60	1680			24
412A-2000	0.25	400/0.7	50	1380	IP54	IEC60034	40
	0.288	460/0.67	60	1680			48
412A-4000	0.25	400/0.7	50	1380	IP54	IEC60034	65
	0.288	460/0.67	60	1680			78
412A-6000	0.25	400/0.7	50	1380	IP54	IEC60034	128
	0.288	460/0.67	60	1680			154
412A-10000	0.25	400/0.7	50	1380	IP54	IEC60034	380
	0.288	460/0.67	60	1680			456

Motor types for stirrers

Motor type: 3-phase, 6-pole

Polydos	Motor type		
	Mixing chamber	Maturing chamber	Storage chamber
412A-500	MMG080MA-6	MMG080MA-6	MMG080MA-6
412A-1000	MMG080MB-6	MMG080MB-6	MMG080MB-6
412A-2000	MMG080MB-6	MMG080MB-6	MMG080MB-6
412A-4000	MMG100L-6	MMG080MB-6	MMG080MB-6
412A-6000	MMG100L-6	MMG100L-6	MMG100L-6
412A-10000	MMG112M-6	MMG100L-6	MMG100L-6

Technical data

Motor type	Power [kW]	Voltage/Current [V/A]	Frequency [Hz]	Speed [rpm]	Enclosure class	Standard
MMG080MA-6	0.37	400/1.1	50	910	IP55	IEC60034
	0.4255	460/1.1	60	1120		
MMG080MB-6	0.55	400/1.6	50	900	IP55	IEC60034
	0.6325	460/1.5	60	1110		
MMG100L-6	1.5	400/3.9	50	940	IP55	IEC60034
	1.73	460/3.73	60	1140		
MMG112M-6	2.2	400/5.8	50	970	IP55	IEC60034
	2.53	460/5.01	60	1170		

Control panel

TM06 0531 0414

Fig. 6 Control panel

Box	Powdercoating 600 x 600 x 250, IP54
Control	smart S7-200 PLC
	7 inch true colour touch screen
	Manual control override, remote on-off
	Multilingual graphic interface
	Emergency stop
	3 editable dry contact outputs: system fault, system operating, lack of dry material
	Modbus RTU slave

Water inlet

Position: on the left (the mirror is on the right)

Material: brass, uPVC

Consisting of: gate valve, pressure reducing valve with manometer and filter, solenoid valve, flow meter

TM06 0533 0414

Fig. 7 Water inlet

8. Product selection

Polydos 412A capacity range

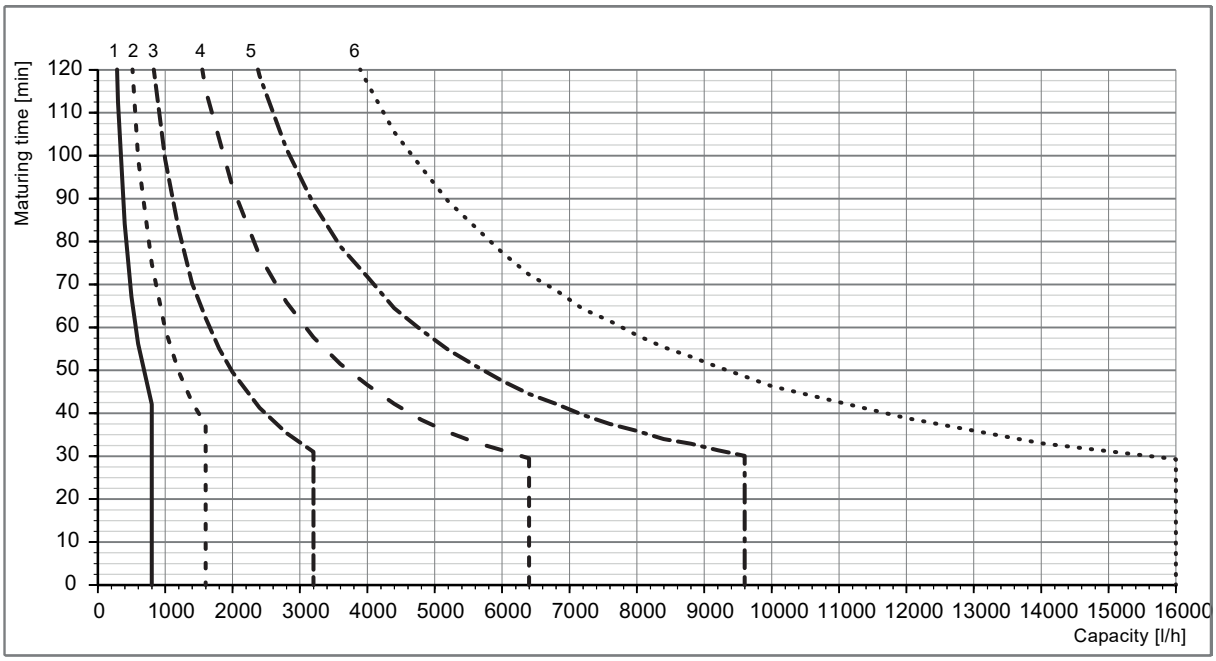

TM06 0212 5013

Fig. 8 Polydos 412A capacity range

Pos.	Description
1	Polydos 412A-500
2	Polydos 412A-1000
3	Polydos 412A-2000
4	Polydos 412A-4000
5	Polydos 412A-6000
6	Polydos 412A-10000

The capacity range graph can be used to determine the right Polydos variant size to apply. Select the desired discharge rate in l/h at the X-axis; select the desired average maturation time of the polymers in minutes at the y-axis. By combining these points, you can size the Polydos unit to fit your specific needs.

Polydos 412A-500

Capacity [l]	Material	Voltage [VAC/Hz]	Panel position	Fieldbus	Type of loading	Type key	Product number
500	PP	400/50	Right	Modbus RTU	Lid, prepared for vacuum loader	PD412A-500 PP-A-RML	98521336
					Star-wheeled feeder	PD412A-500 PP-A-RMG	98521338
				Profibus-DP	Lid, prepared for vacuum loader	PD412A-500 PP-A-RIL	98521339
					Star-wheeled feeder	PD412A-500 PP-A-RIG	98521351
				Ethernet (Modbus TCP/IP)	Lid, prepared for vacuum loader	PD412A-500 PP-A-REL	98521352
					Star-wheeled feeder	PD412A-500 PP-A-REG	98521354
			Left	Modbus RTU	Lid, prepared for vacuum loader	PD412A-500 PP-A-LML	98521355
					Star-wheeled feeder	PD412A-500 PP-A-LMG	98521357
				Profibus-DP	Lid, prepared for vacuum loader	PD412A-500 PP-A-LIL	98521358
					Star-wheeled feeder	PD412A-500 PP-A-LIG	98521360
				Ethernet (Modbus TCP/IP)	Lid, prepared for vacuum loader	PD412A-500 PP-A-LEL	98521361
					Star-wheeled feeder	PD412A-500 PP-A-LEG	98521363
		460/60	Right	Modbus RTU	Lid, prepared for vacuum loader	PD412A-500 PP-C-RML	98521364
					Star-wheeled feeder	PD412A-500 PP-C-RMG	98521366
				Profibus-DP	Lid, prepared for vacuum loader	PD412A-500 PP-C-RIL	98521367
					Star-wheeled feeder	PD412A-500 PP-C-RIG	98521369
				Ethernet (Modbus TCP/IP)	Lid, prepared for vacuum loader	PD412A-500 PP-C-REL	98521370
					Star-wheeled feeder	PD412A-500 PP-C-REG	98521372
			Left	Modbus RTU	Lid, prepared for vacuum loader	PD412A-500 PP-C-LML	98521373
					Star-wheeled feeder	PD412A-500 PP-C-LMG	98521375
				Profibus-DP	Lid, prepared for vacuum loader	PD412A-500 PP-C-LIL	98521376
					Star-wheeled feeder	PD412A-500 PP-C-LIG	98521378
				Ethernet (Modbus TCP/IP)	Lid, prepared for vacuum loader	PD412A-500 PP-C-LEL	98521379
					Star-wheeled feeder	PD412A-500 PP-C-LEG	98521381
	SS 304	400/50	Right	Modbus RTU	Lid, prepared for vacuum loader	PD412A-500 SS-A-RML	98521382
					Star-wheeled feeder	PD412A-500 SS-A-RMG	98521384
				Profibus-DP	Lid, prepared for vacuum loader	PD412A-500 SS-A-RIL	98521385
					Star-wheeled feeder	PD412A-500 SS-A-RIG	98521387
				Ethernet (Modbus TCP/IP)	Lid, prepared for vacuum loader	PD412A-500 SS-A-REL	98521388
					Star-wheeled feeder	PD412A-500 SS-A-REG	98521390
			Left	Modbus RTU	Lid, prepared for vacuum loader	PD412A-500 SS-A-LML	98521391
					Star-wheeled feeder	PD412A-500 SS-A-LMG	98521393
				Profibus-DP	Lid, prepared for vacuum loader	PD412A-500 SS-A-LIL	98521394
					Star-wheeled feeder	PD412A-500 SS-A-LIG	98521396
				Ethernet (Modbus TCP/IP)	Lid, prepared for vacuum loader	PD412A-500 SS-A-LEL	98521397
					Star-wheeled feeder	PD412A-500 SS-A-LEG	98521399
		460/60	Right	Modbus RTU	Lid, prepared for vacuum loader	PD412A-500 SS-C-RML	98521400
					Star-wheeled feeder	PD412A-500 SS-C-RMG	98521402
				Profibus-DP	Lid, prepared for vacuum loader	PD412A-500 SS-C-RIL	98521403
					Star-wheeled feeder	PD412A-500 SS-C-RIG	98521405
				Ethernet (Modbus TCP/IP)	Lid, prepared for vacuum loader	PD412A-500 SS-C-REL	98521406
					Star-wheeled feeder	PD412A-500 SS-C-REG	98521408
			Left	Modbus RTU	Lid, prepared for vacuum loader	PD412A-500 SS-C-LML	98521409
					Star-wheeled feeder	PD412A-500 SS-C-LMG	98521411
				Profibus-DP	Lid, prepared for vacuum loader	PD412A-500 SS-C-LIL	98521412
					Star-wheeled feeder	PD412A-500 SS-C-LIG	98521414
				Ethernet (Modbus TCP/IP)	Lid, prepared for vacuum loader	PD412A-500 SS-C-LEL	98521415
					Star-wheeled feeder	PD412A-500 SS-C-LEG	98521417

Polydos 412A-1000

Capacity [l]	Material	Voltage [VAC/Hz]	Panel position	Fieldbus	Type of loading	Type key	Product number
1000	PP	400/50	Right	Modbus RTU	Lid, prepared for vacuum loader	PD412A-1000 PP-A-RML	98521418
					Star-wheeled feeder	PD412A-1000 PP-A-RMG	98521420
				Profibus-DP	Lid, prepared for vacuum loader	PD412A-1000 PP-A-RIL	98521421
					Star-wheeled feeder	PD412A-1000 PP-A-RIG	98521423
				Ethernet (Modbus TCP/IP)	Lid, prepared for vacuum loader	PD412A-1000 PP-A-REL	98521424
					Star-wheeled feeder	PD412A-1000 PP-A-REG	98521426
			Left	Modbus RTU	Lid, prepared for vacuum loader	PD412A-1000 PP-A-LML	98521427
					Star-wheeled feeder	PD412A-1000 PP-A-LMG	98521429
				Profibus-DP	Lid, prepared for vacuum loader	PD412A-1000 PP-A-LIL	98521430
					Star-wheeled feeder	PD412A-1000 PP-A-LIG	98521432
				Ethernet (Modbus TCP/IP)	Lid, prepared for vacuum loader	PD412A-1000 PP-A-LEL	98521433
					Star-wheeled feeder	PD412A-1000 PP-A-LEG	98521435
		460/60	Right	Modbus RTU	Lid, prepared for vacuum loader	PD412A-1000 PP-C-RML	98521436
					Star-wheeled feeder	PD412A-1000 PP-C-RMG	98521438
				Profibus-DP	Lid, prepared for vacuum loader	PD412A-1000 PP-C-RIL	98521439
					Star-wheeled feeder	PD412A-1000 PP-C-RIG	98521441
				Ethernet (Modbus TCP/IP)	Lid, prepared for vacuum loader	PD412A-1000 PP-C-REL	98521442
					Star-wheeled feeder	PD412A-1000 PP-C-REG	98521444
			Left	Modbus RTU	Lid, prepared for vacuum loader	PD412A-1000 PP-C-LML	98521445
					Star-wheeled feeder	PD412A-1000 PP-C-LMG	98521447
				Profibus-DP	Lid, prepared for vacuum loader	PD412A-1000 PP-C-LIL	98521448
					Star-wheeled feeder	PD412A-1000 PP-C-LIG	98521450
				Ethernet (Modbus TCP/IP)	Lid, prepared for vacuum loader	PD412A-1000 PP-C-LEL	98521451
					Star-wheeled feeder	PD412A-1000 PP-C-LEG	98521453
	SS	400/50	Right	Modbus RTU	Lid, prepared for vacuum loader	PD412A-1000 SS-A-RML	98521454
					Star-wheeled feeder	PD412A-1000 SS-A-RMG	98521456
				Profibus-DP	Lid, prepared for vacuum loader	PD412A-1000 SS-A-RIL	98521457
					Star-wheeled feeder	PD412A-1000 SS-A-RIG	98521459
				Ethernet (Modbus TCP/IP)	Lid, prepared for vacuum loader	PD412A-1000 SS-A-REL	98521460
					Star-wheeled feeder	PD412A-1000 SS-A-REG	98521462
			Left	Modbus RTU	Lid, prepared for vacuum loader	PD412A-1000 SS-A-LML	98521463
					Star-wheeled feeder	PD412A-1000 SS-A-LMG	98521465
				Profibus-DP	Lid, prepared for vacuum loader	PD412A-1000 SS-A-LIL	98521466
					Star-wheeled feeder	PD412A-1000 SS-A-LIG	98521468
				Ethernet (Modbus TCP/IP)	Lid, prepared for vacuum loader	PD412A-1000 SS-A-LEL	98521469
					Star-wheeled feeder	PD412A-1000 SS-A-LEG	98521471
		460/60	Right	Modbus RTU	Lid, prepared for vacuum loader	PD412A-1000 SS-C-RML	98521472
					Star-wheeled feeder	PD412A-1000 SS-C-RMG	98521474
				Profibus-DP	Lid, prepared for vacuum loader	PD412A-1000 SS-C-RIL	98521475
					Star-wheeled feeder	PD412A-1000 SS-C-RIG	98521477
				Ethernet (Modbus TCP/IP)	Lid, prepared for vacuum loader	PD412A-1000 SS-C-REL	98521478
					Star-wheeled feeder	PD412A-1000 SS-C-REG	98521480
			Left	Modbus RTU	Lid, prepared for vacuum loader	PD412A-1000 SS-C-LML	98521481
					Star-wheeled feeder	PD412A-1000 SS-C-LMG	98521483
				Profibus-DP	Lid, prepared for vacuum loader	PD412A-1000 SS-C-LIL	98521484
					Star-wheeled feeder	PD412A-1000 SS-C-LIG	98521486
				Ethernet (Modbus TCP/IP)	Lid, prepared for vacuum loader	PD412A-1000 SS-C-LEL	98521487
					Star-wheeled feeder	PD412A-1000 SS-C-LEG	98521489

Polydos 412A-2000

Capacity [l]	Material	Voltage [VAC/Hz]	Panel position	Fieldbus	Type of loading	Type key	Product number
2000	PP	400/50	Right	Modbus RTU	Lid, prepared for vacuum loader	PD412A-2000 PP-A-RML	98521490
					Star-wheeled feeder	PD412A-2000 PP-A-RMG	98521492
				Profibus-DP	Lid, prepared for vacuum loader	PD412A-2000 PP-A-RIL	98521493
					Star-wheeled feeder	PD412A-2000 PP-A-RIG	98521495
				Ethernet (Modbus TCP/IP)	Lid, prepared for vacuum loader	PD412A-2000 PP-A-REL	98521496
					Star-wheeled feeder	PD412A-2000 PP-A-REG	98521498
			Left	Modbus RTU	Lid, prepared for vacuum loader	PD412A-2000 PP-A-LML	98521499
					Star-wheeled feeder	PD412A-2000 PP-A-LMG	98521501
				Profibus-DP	Lid, prepared for vacuum loader	PD412A-2000 PP-A-LIL	98521502
					Star-wheeled feeder	PD412A-2000 PP-A-LIG	98521504
				Ethernet (Modbus TCP/IP)	Lid, prepared for vacuum loader	PD412A-2000 PP-A-LEL	98521505
					Star-wheeled feeder	PD412A-2000 PP-A-LEG	98521507
		460/60	Right	Modbus RTU	Lid, prepared for vacuum loader	PD412A-2000 PP-C-RML	98521508
					Star-wheeled feeder	PD412A-2000 PP-C-RMG	98521510
				Profibus-DP	Lid, prepared for vacuum loader	PD412A-2000 PP-C-RIL	98521511
					Star-wheeled feeder	PD412A-2000 PP-C-RIG	98521513
				Ethernet (Modbus TCP/IP)	Lid, prepared for vacuum loader	PD412A-2000 PP-C-REL	98521514
					Star-wheeled feeder	PD412A-2000 PP-C-REG	98521516
			Left	Modbus RTU	Lid, prepared for vacuum loader	PD412A-2000 PP-C-LML	98521517
					Star-wheeled feeder	PD412A-2000 PP-C-LMG	98521519
				Profibus-DP	Lid, prepared for vacuum loader	PD412A-2000 PP-C-LIL	98521520
					Star-wheeled feeder	PD412A-2000 PP-C-LIG	98521522
				Ethernet (Modbus TCP/IP)	Lid, prepared for vacuum loader	PD412A-2000 PP-C-LEL	98521523
					Star-wheeled feeder	PD412A-2000 PP-C-LEG	98521525
	SS	400/50	Right	Modbus RTU	Lid, prepared for vacuum loader	PD412A-2000 SS-A-RML	98521526
					Star-wheeled feeder	PD412A-2000 SS-A-RMG	98521528
				Profibus-DP	Lid, prepared for vacuum loader	PD412A-2000 SS-A-RIL	98521529
					Star-wheeled feeder	PD412A-2000 SS-A-RIG	98521531
				Ethernet (Modbus TCP/IP)	Lid, prepared for vacuum loader	PD412A-2000 SS-A-REL	98521532
					Star-wheeled feeder	PD412A-2000 SS-A-REG	98521534
			Left	Modbus RTU	Lid, prepared for vacuum loader	PD412A-2000 SS-A-LML	98521535
					Star-wheeled feeder	PD412A-2000 SS-A-LMG	98521537
				Profibus-DP	Lid, prepared for vacuum loader	PD412A-2000 SS-A-LIL	98521538
					Star-wheeled feeder	PD412A-2000 SS-A-LIG	98521540
				Ethernet (Modbus TCP/IP)	Lid, prepared for vacuum loader	PD412A-2000 SS-A-LEL	98521541
					Star-wheeled feeder	PD412A-2000 SS-A-LEG	98521543
		460/60	Right	Modbus RTU	Lid, prepared for vacuum loader	PD412A-2000 SS-C-RML	98521544
					Star-wheeled feeder	PD412A-2000 SS-C-RMG	98521546
				Profibus-DP	Lid, prepared for vacuum loader	PD412A-2000 SS-C-RIL	98521547
					Star-wheeled feeder	PD412A-2000 SS-C-RIG	98521549
				Ethernet (Modbus TCP/IP)	Lid, prepared for vacuum loader	PD412A-2000 SS-C-REL	98521550
					Star-wheeled feeder	PD412A-2000 SS-C-REG	98521552
			Left	Modbus RTU	Lid, prepared for vacuum loader	PD412A-2000 SS-C-LML	98521553
					Star-wheeled feeder	PD412A-2000 SS-C-LMG	98521555
				Profibus-DP	Lid, prepared for vacuum loader	PD412A-2000 SS-C-LIL	98521556
					Star-wheeled feeder	PD412A-2000 SS-C-LIG	98521558
				Ethernet (Modbus TCP/IP)	Lid, prepared for vacuum loader	PD412A-2000 SS-C-LEL	98521559
					Star-wheeled feeder	PD412A-2000 SS-C-LEG	98521561

Polydos 412A-4000

Capacity [l]	Material	Voltage [VAC/Hz]	Panel position	Fieldbus	Type of loading	Type key	Product number
4000	PP	400/50	Right	Modbus RTU	Lid, prepared for vacuum loader	PD412A-4000 PP-A-RML	98521562
					Star-wheeled feeder	PD412A-4000 PP-A-RMG	98521564
				Profibus-DP	Lid, prepared for vacuum loader	PD412A-4000 PP-A-RIL	98521565
					Star-wheeled feeder	PD412A-4000 PP-A-RIG	98521567
				Ethernet (Modbus TCP/IP)	Lid, prepared for vacuum loader	PD412A-4000 PP-A-REL	98521568
					Star-wheeled feeder	PD412A-4000 PP-A-REG	98521570
			Left	Modbus RTU	Lid, prepared for vacuum loader	PD412A-4000 PP-A-LML	98521571
					Star-wheeled feeder	PD412A-4000 PP-A-LMG	98521573
				Profibus-DP	Lid, prepared for vacuum loader	PD412A-4000 PP-A-LIL	98521574
					Star-wheeled feeder	PD412A-4000 PP-A-LIG	98521576
				Ethernet (Modbus TCP/IP)	Lid, prepared for vacuum loader	PD412A-4000 PP-A-LEL	98521577
					Star-wheeled feeder	PD412A-4000 PP-A-LEG	98521579
		460/60	Right	Modbus RTU	Lid, prepared for vacuum loader	PD412A-4000 PP-C-RML	98521580
					Star-wheeled feeder	PD412A-4000 PP-C-RMG	98521582
				Profibus-DP	Lid, prepared for vacuum loader	PD412A-4000 PP-C-RIL	98521583
					Star-wheeled feeder	PD412A-4000 PP-C-RIG	98521585
				Ethernet (Modbus TCP/IP)	Lid, prepared for vacuum loader	PD412A-4000 PP-C-REL	98521586
					Star-wheeled feeder	PD412A-4000 PP-C-REG	98521588
			Left	Modbus RTU	Lid, prepared for vacuum loader	PD412A-4000 PP-C-LML	98521589
					Star-wheeled feeder	PD412A-4000 PP-C-LMG	98521591
				Profibus-DP	Lid, prepared for vacuum loader	PD412A-4000 PP-C-LIL	98521592
					Star-wheeled feeder	PD412A-4000 PP-C-LIG	98521594
				Ethernet (Modbus TCP/IP)	Lid, prepared for vacuum loader	PD412A-4000 PP-C-LEL	98521595
					Star-wheeled feeder	PD412A-4000 PP-C-LEG	98521597
	SS	400/50	Right	Modbus RTU	Lid, prepared for vacuum loader	PD412A-4000 SS-A-RML	98521598
					Star-wheeled feeder	PD412A-4000 SS-A-RMG	98521600
				Profibus-DP	Lid, prepared for vacuum loader	PD412A-4000 SS-A-RIL	98521601
					Star-wheeled feeder	PD412A-4000 SS-A-RIG	98521603
				Ethernet (Modbus TCP/IP)	Lid, prepared for vacuum loader	PD412A-4000 SS-A-REL	98521604
					Star-wheeled feeder	PD412A-4000 SS-A-REG	98521606
			Left	Modbus RTU	Lid, prepared for vacuum loader	PD412A-4000 SS-A-LML	98521607
					Star-wheeled feeder	PD412A-4000 SS-A-LMG	98521609
				Profibus-DP	Lid, prepared for vacuum loader	PD412A-4000 SS-A-LIL	98521610
					Star-wheeled feeder	PD412A-4000 SS-A-LIG	98521612
				Ethernet (Modbus TCP/IP)	Lid, prepared for vacuum loader	PD412A-4000 SS-A-LEL	98521613
					Star-wheeled feeder	PD412A-4000 SS-A-LEG	98521615
		460/60	Right	Modbus RTU	Lid, prepared for vacuum loader	PD412A-4000 SS-C-RML	98521616
					Star-wheeled feeder	PD412A-4000 SS-C-RMG	98521618
				Profibus-DP	Lid, prepared for vacuum loader	PD412A-4000 SS-C-RIL	98521619
					Star-wheeled feeder	PD412A-4000 SS-C-RIG	98521621
				Ethernet (Modbus TCP/IP)	Lid, prepared for vacuum loader	PD412A-4000 SS-C-REL	98521622
					Star-wheeled feeder	PD412A-4000 SS-C-REG	98521624
			Left	Modbus RTU	Lid, prepared for vacuum loader	PD412A-4000 SS-C-LML	98521625
					Star-wheeled feeder	PD412A-4000 SS-C-LMG	98521627
				Profibus-DP	Lid, prepared for vacuum loader	PD412A-4000 SS-C-LIL	98521628
					Star-wheeled feeder	PD412A-4000 SS-C-LIG	98521630
				Ethernet (Modbus TCP/IP)	Lid, prepared for vacuum loader	PD412A-4000 SS-C-LEL	98521631
					Star-wheeled feeder	PD412A-4000 SS-C-LEG	98521633

Polydos 412A-6000

Capacity [l]	Material	Voltage [VAC/Hz]	Panel position	Fieldbus	Type of loading	Type key	Product number
6000	PP	400/50	Right	Modbus RTU	Lid, prepared for vacuum loader	PD412A-6000 PP-A-RML	98521634
					Star-wheeled feeder	PD412A-6000 PP-A-RMG	98521636
				Profibus-DP	Lid, prepared for vacuum loader	PD412A-6000 PP-A-RIL	98521637
					Star-wheeled feeder	PD412A-6000 PP-A-RIG	98521639
				Ethernet (Modbus TCP/IP)	Lid, prepared for vacuum loader	PD412A-6000 PP-A-REL	98521640
					Star-wheeled feeder	PD412A-6000 PP-A-REG	98521642
			Left	Modbus RTU	Lid, prepared for vacuum loader	PD412A-6000 PP-A-LML	98521643
					Star-wheeled feeder	PD412A-6000 PP-A-LMG	98521645
				Profibus-DP	Lid, prepared for vacuum loader	PD412A-6000 PP-A-LIL	98521646
					Star-wheeled feeder	PD412A-6000 PP-A-LIG	98521648
				Ethernet (Modbus TCP/IP)	Lid, prepared for vacuum loader	PD412A-6000 PP-A-LEL	98521649
					Star-wheeled feeder	PD412A-6000 PP-A-LEG	98521651
		460/60	Right	Modbus RTU	Lid, prepared for vacuum loader	PD412A-6000 PP-C-RML	98521652
					Star-wheeled feeder	PD412A-6000 PP-C-RMG	98521654
				Profibus-DP	Lid, prepared for vacuum loader	PD412A-6000 PP-C-RIL	98521655
					Star-wheeled feeder	PD412A-6000 PP-C-RIG	98521657
				Ethernet (Modbus TCP/IP)	Lid, prepared for vacuum loader	PD412A-6000 PP-C-REL	98521658
					Star-wheeled feeder	PD412A-6000 PP-C-REG	98521660
			Left	Modbus RTU	Lid, prepared for vacuum loader	PD412A-6000 PP-C-LML	98521661
					Star-wheeled feeder	PD412A-6000 PP-C-LMG	98521663
				Profibus-DP	Lid, prepared for vacuum loader	PD412A-6000 PP-C-LIL	98521664
					Star-wheeled feeder	PD412A-6000 PP-C-LIG	98521666
				Ethernet (Modbus TCP/IP)	Lid, prepared for vacuum loader	PD412A-6000 PP-C-LEL	98521667
					Star-wheeled feeder	PD412A-6000 PP-C-LEG	98521669
	SS	400/50	Right	Modbus RTU	Lid, prepared for vacuum loader	PD412A-6000 SS-A-RML	98521670
					Star-wheeled feeder	PD412A-6000 SS-A-RMG	98521672
				Profibus-DP	Lid, prepared for vacuum loader	PD412A-6000 SS-A-RIL	98521673
					Star-wheeled feeder	PD412A-6000 SS-A-RIG	98521675
				Ethernet (Modbus TCP/IP)	Lid, prepared for vacuum loader	PD412A-6000 SS-A-REL	98521676
					Star-wheeled feeder	PD412A-6000 SS-A-REG	98521678
			Left	Modbus RTU	Lid, prepared for vacuum loader	PD412A-6000 SS-A-LML	98521679
					Star-wheeled feeder	PD412A-6000 SS-A-LMG	98521681
				Profibus-DP	Lid, prepared for vacuum loader	PD412A-6000 SS-A-LIL	98521682
					Star-wheeled feeder	PD412A-6000 SS-A-LIG	98521684
				Ethernet (Modbus TCP/IP)	Lid, prepared for vacuum loader	PD412A-6000 SS-A-LEL	98521685
					Star-wheeled feeder	PD412A-6000 SS-A-LEG	98521687
		460/60	Right	Modbus RTU	Lid, prepared for vacuum loader	PD412A-6000 SS-C-RML	98521688
					Star-wheeled feeder	PD412A-6000 SS-C-RMG	98521690
				Profibus-DP	Lid, prepared for vacuum loader	PD412A-6000 SS-C-RIL	98521691
					Star-wheeled feeder	PD412A-6000 SS-C-RIG	98521693
				Ethernet (Modbus TCP/IP)	Lid, prepared for vacuum loader	PD412A-6000 SS-C-REL	98521694
					Star-wheeled feeder	PD412A-6000 SS-C-REG	98521696
			Left	Modbus RTU	Lid, prepared for vacuum loader	PD412A-6000 SS-C-LML	98521697
					Star-wheeled feeder	PD412A-6000 SS-C-LMG	98521699
				Profibus-DP	Lid, prepared for vacuum loader	PD412A-6000 SS-C-LIL	98521700
					Star-wheeled feeder	PD412A-6000 SS-C-LIG	98521702
				Ethernet (Modbus TCP/IP)	Lid, prepared for vacuum loader	PD412A-6000 SS-C-LEL	98521703
					Star-wheeled feeder	PD412A-6000 SS-C-LEG	98521705

Poyldos 412A-10000

Capacity [l]	Material	Voltage [VAC/Hz]	Panel position	Fieldbus	Type of loading	Type key	Product number
10000	PP	400/50	Right	Modbus RTU	Lid, prepared for vacuum loader	PD412A-10000 PP-A-RML	98521706
					Star-wheeled feeder	PD412A-10000 PP-A-RMG	98521708
				Profibus-DP	Lid, prepared for vacuum loader	PD412A-10000 PP-A-RIL	98521710
					Star-wheeled feeder	PD412A-10000 PP-A-RIG	98521712
				Ethernet (Modbus TCP/IP)	Lid, prepared for vacuum loader	PD412A-10000 PP-A-REL	98521713
					Star-wheeled feeder	PD412A-10000 PP-A-REG	98521715
			Left	Modbus RTU	Lid, prepared for vacuum loader	PD412A-10000 PP-A-LML	98521716
					Star-wheeled feeder	PD412A-10000 PP-A-LMG	98521718
				Profibus-DP	Lid, prepared for vacuum loader	PD412A-10000 PP-A-LIL	98521719
					Star-wheeled feeder	PD412A-10000 PP-A-LIG	98521721
				Ethernet (Modbus TCP/IP)	Lid, prepared for vacuum loader	PD412A-10000 PP-A-LEL	98521722
					Star-wheeled feeder	PD412A-10000 PP-A-LEG	98521724
		460/60	Right	Modbus RTU	Lid, prepared for vacuum loader	PD412A-10000 PP-C-RML	98521725
					Star-wheeled feeder	PD412A-10000 PP-C-RMG	98521727
				Profibus-DP	Lid, prepared for vacuum loader	PD412A-10000 PP-C-RIL	98521728
					Star-wheeled feeder	PD412A-10000 PP-C-RIG	98521730
				Ethernet (Modbus TCP/IP)	Lid, prepared for vacuum loader	PD412A-10000 PP-C-REL	98521731
					Star-wheeled feeder	PD412A-10000 PP-C-REG	98521733
			Left	Modbus RTU	Lid, prepared for vacuum loader	PD412A-10000 PP-C-LML	98521734
					Star-wheeled feeder	PD412A-10000 PP-C-LMG	98521736
				Profibus-DP	Lid, prepared for vacuum loader	PD412A-10000 PP-C-LIL	98521737
					Star-wheeled feeder	PD412A-10000 PP-C-LIG	98521739
				Ethernet (Modbus TCP/IP)	Lid, prepared for vacuum loader	PD412A-10000 PP-C-LEL	98521740
					Star-wheeled feeder	PD412A-10000 PP-C-LEG	98521742
	SS	400/50	Right	Modbus RTU	Lid, prepared for vacuum loader	PD412A-10000 SS-A-RML	98521743
					Star-wheeled feeder	PD412A-10000 SS-A-RMG	98521745
				Profibus-DP	Lid, prepared for vacuum loader	PD412A-10000 SS-A-RIL	98521746
					Star-wheeled feeder	PD412A-10000 SS-A-RIG	98521748
				Ethernet (Modbus TCP/IP)	Lid, prepared for vacuum loader	PD412A-10000 SS-A-REL	98521749
					Star-wheeled feeder	PD412A-10000 SS-A-REG	98521751
			Left	Modbus RTU	Lid, prepared for vacuum loader	PD412A-10000 SS-A-LML	98521752
					Star-wheeled feeder	PD412A-10000 SS-A-LMG	98521754
				Profibus-DP	Lid, prepared for vacuum loader	PD412A-10000 SS-A-LIL	98521755
					Star-wheeled feeder	PD412A-10000 SS-A-LIG	98521757
				Ethernet (Modbus TCP/IP)	Lid, prepared for vacuum loader	PD412A-10000 SS-A-LEL	98521758
					Star-wheeled feeder	PD412A-10000 SS-A-LEG	98521760
		460/60	Right	Modbus RTU	Lid, prepared for vacuum loader	PD412A-10000 SS-C-RML	98521761
					Star-wheeled feeder	PD412A-10000 SS-C-RMG	98521763
				Profibus-DP	Lid, prepared for vacuum loader	PD412A-10000 SS-C-RIL	98521764
					Star-wheeled feeder	PD412A-10000 SS-C-RIG	98521766
				Ethernet (Modbus TCP/IP)	Lid, prepared for vacuum loader	PD412A-10000 SS-C-REL	98521767
					Star-wheeled feeder	PD412A-10000 SS-C-REG	98521769
			Left	Modbus RTU	Lid, prepared for vacuum loader	PD412A-10000 SS-C-LML	98521770
					Star-wheeled feeder	PD412A-10000 SS-C-LMG	98521772
				Profibus-DP	Lid, prepared for vacuum loader	PD412A-10000 SS-C-LIL	98521773
					Star-wheeled feeder	PD412A-10000 SS-C-LIG	98521775
				Ethernet (Modbus TCP/IP)	Lid, prepared for vacuum loader	PD412A-10000 SS-C-LEL	98521776
					Star-wheeled feeder	PD412A-10000 SS-C-LEG	98521778

9. Accessories

Post-dilution device

The post-dilution device is mounted on a PPH base plate. It is equipped with:

- Shut-off valve, dirt trap, check valve and pressure reducing valve (brass)
- Flowmeter with MIN contact
- Static mixer (uPVC)
- Solenoid valve, 230 V or 24 VDC (brass).

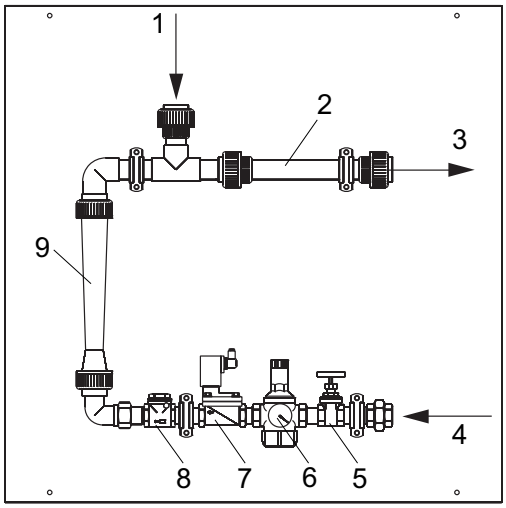

TM06 0213 5013

Fig. 9 Post-dilution device

Pos.	Description
1	Medium inlet
2	Static mixer
3	Medium outlet
4	Dilution water inlet
5	Gate valve
6	Pressure reducing valve
7	Solenoid valve
8	Check valve
9	Flow meter

Dimensions

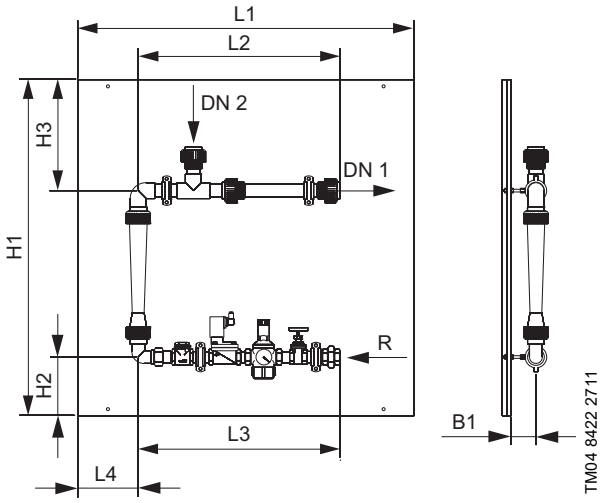

Fig. 10 Post-dilution device

Capacity	Measurements in mm											Product number	
[l/h]	R	DN 1	DN 2	L1	L2	L3	L4	H1	H2	H3	B1	Without flow control	With flow control
2500	1"	32	32	990	600	640	180	990	175	330	60	95706295	98421976
4000	1 1/4"	40	32	990	710	710	140	990	160	230	70	95705192	98421977
6000	1 1/2"	50	32	990	750	750	85	990	190	220	75	95715515	98421978
10000	1 1/2"	50	32	990	750	810	55	990	190	220	55	95714424	98421979
25000	1 1/2"	65	50	990	800	1990	50	990	190	220	75	98421975	98421980

Dosing skid

The polymer dosing skid includes for example:

- 2 screw pumps (120 l/h, 6 bar)
  - Capacity: 120 l/h
  - Pressure: 6 bar
  - Motor: 3-phase, 380 VAC / 10~60 Hz, 0.75 kW, IP55, F, SEW
  - Inlet and outlet connection: G 1 1/4 flange
  - Rotator material: DIN 1.4571
  - Stator material: SBBPF
  - Type of installation: Horizontal.
- 1 post-dilution device of 1000 l/h
- 1 electromagnetic flow meter
- 1 control panel for 4-20 mA signal to control the pump running via a VFD automatically, with manual override
- Solenoid valves/safety valves/pressure-reducing valve and filter/manual valves/pressure gauges
- Skid frame and piping.

Accessories for all installations

Vacuum loader

- Modular and compact design
- Transparent hopper
- Integrated AC current blower
- Cleaning of filter element by reversed airflows
- With plate or bag-type compensating filter
- Operator-friendly µP-controller
- Programmable control functions for:
  – Conveying
  – Filter cleaning
  – Proportioning/dosing valve
  – Purging valve.
- Operating status indicated by LEDs
- End of conveying cycle via time or level
- Connection possibilities for external:
  – Level switch
  – Start/stop switch
  – Alarm.
- Low-noise operation
- Options:
  – Volume extension
  – Proportioning attachment.

TM06 0532 0414

Fig. 11 Vacuum loader

Description	Product number
Vacuum loader	98717335

Technical data

Diameter of conveying line	[mm]	38
Material type		Dry material
Particle size of material	[µm]	> 5
Conveying capacity[1)]	[kg/h]	70
Power Supply		1-phase, AC, 50 Hz 220-240 V
Filter element		PET, needled felt 0.2 m^2
A. C. Blower	[W]	650
Noise emissions	[dB(A)]	< 80
Weight	[kg]	12.2

1) Example for conveying of PE powder over a distance of 15 m, of which 4 m are vertical.

Extension hopper

Description	Product number
Extension hopper, 50 l, for installation on the dry-material feeder, stainless steel	95719002
Extension hopper, 100 l, for installation on the dry-material feeder, stainless steel	95720127
Extension hopper, 200 l, for installation on the dry-material feeder, stainless steel	95736039

Accessories for storage in silos

Star-wheeled feeder

Star-wheeled feeder with connecting flanges DN 150, star-wheel with 6 cubicles and 6 replaceable rubber gaskets, motor: 230/400 V, 50 Hz, 0.18 kW, 5.5 1/min, capacity: 4.5 l per revolution, IP54

Description	Product number
Star-wheeled feeder	98585757

Gate valve

Gate valve with connecting flange DN 150 with stuffing box and hand wheel, constructional steel

Description	Product number
Gate valve	98585758

10. Spare parts

Polydos 412A-500

Product	Replacement interval	Product number
Metering screw	2 years	98502332
Solenoid valve	2 years	95706390
Water flow meter	3-5 years	99623054
Reducing valve	3-5 years	95734792
Stirrer on chamber I		98421991
Stirrer on chamber II/III		98421990

Polydos 412A-1000

Product	Replacement interval	Product number
Metering screw	2 years	98502332
Solenoid valve	2 years	95706390
Water flow meter	3-5 years	99623054
Reducing valve	3-5 years	95734792
Stirrer on chamber I		95716817
Stirrer on chamber II/III		95716818

Polydos 412A-2000

Product	Replacement interval	Product number
Metering screw	2 years	98502332
Solenoid valve	2 years	95706391
Water flow meter	3-5 years	99623056
Reducing valve	3-5 years	98421613
Stirrer on chamber I		95716820
Stirrer on chamber II/III		95716821

Polydos 412A-4000

Product	Replacement interval	Product number
Metering screw	2 years	98503705
Solenoid valve	2 years	95710313
Water flow meter	3-5 years	99623058
Reducing valve	3-5 years	95719774
Stirrer on chamber I		95716824
Stirrer on chamber II/III		95716825

Polydos 412A-6000

Product	Replacement interval	Product number
Metering screw	2 years	98503705
Solenoid valve	2 years	95710313
Water flow meter	2 years	99623058
Reducing valve	3-5 years	95719774
Stirrer on chamber I		95716824
Stirrer on chamber II/III		95716827

Polydos 412A-10000

Product	Replacement interval	Product number
Metering screw	2 years	98503704
Solenoid valve	2 years	98421611
Water flow meter	2 years	99623058
Reducing valve	3-5 years	98421615
Stirrer on chamber I		95716829
Stirrer on chamber II/III		95716827

11. Grundfos Product Center

Online search and sizing tool to help you make the right choice.
http://product-selection.grundfos.com

All the information you need in one place

Performance curves, technical specifications, pictures, dimensional drawings, motor curves, wiring diagrams, spare parts, service kits, 3D drawings, documents, system parts. The Product Center displays any recent and saved items - including complete projects - right on the main page.

Downloads

On the product pages, you can download installation and operating instructions, data booklets, service instructions, etc. in PDF format.

TM07 2384

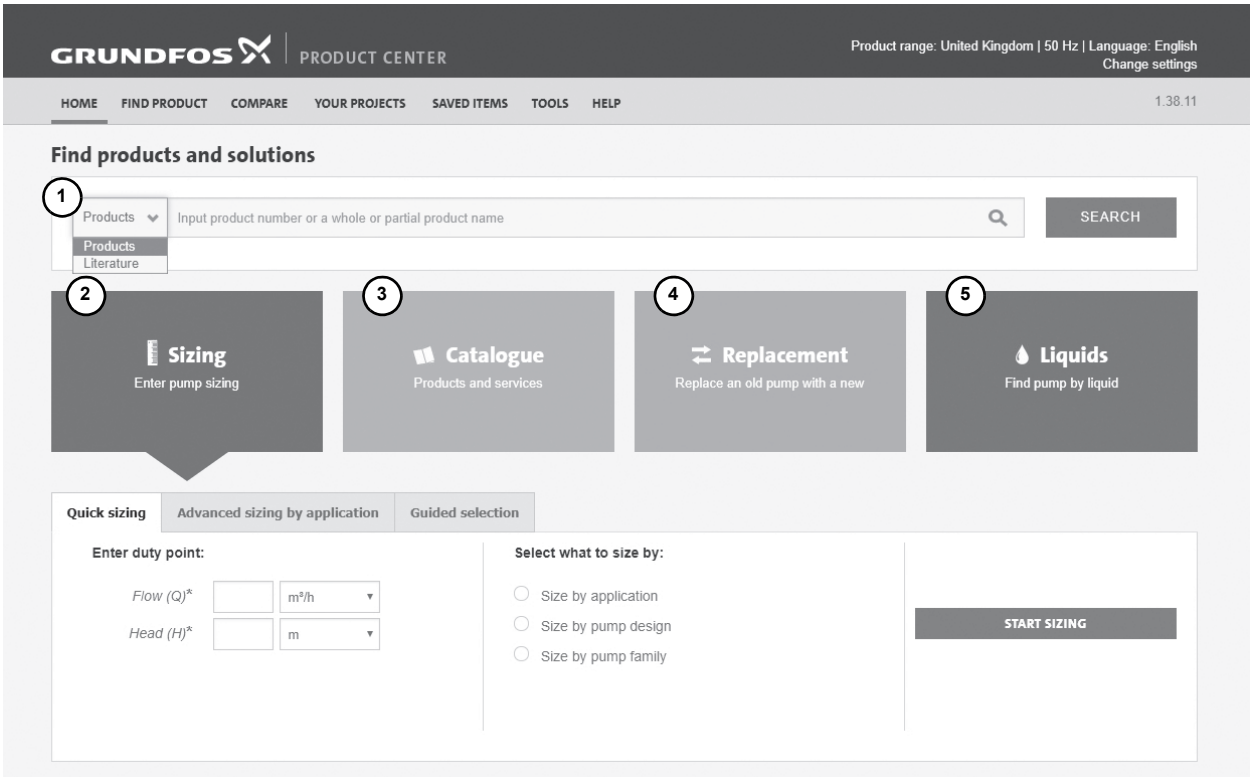

TM07 2383

Pos.	Description
1	This drop-down menu enables you to set the search function to "Products" or "Literature".
2	**SIZING** enables you to size a pump based on entered data and selection choices.
3	**CATALOGUE** gives you access to the Grundfos product catalogue.
4	**REPLACEMENT** enables you to find a replacement product. Search results will include information on the lowest purchase price the lowest energy consumption the lowest total life cycle cost.
5	**LIQUIDS** enables you to find pumps designed for aggressive, flammable or other special liquids.

© 2020 Grundfos Holding A/S, all rights reserved.

Trademarks displayed in this material, including but not limited to Grundfos, the Grundfos logo and "be think innovate" are registered trademarks owned by The Grundfos Group. All rights reserved.

98573856 0320

ECM: 1273726

GRUNDFOS A/S
DK-8850 Bjerringbro . Denmark
Telephone: +45 87 50 14 00
www.grundfos.com

GRUNDFOS