CR, CRI, CRN

Double shaft seal (back-to-back)

Service instructions

be
think
innovate

GRUNDFOS

Original service instructions.

CONTENTS

		Page
1.	**Symbols used in this document**	**2**
2.	**General information**	**2**
3.	**Torques**	**3**
4.	**Lubricants**	**3**
5.	**Service tools**	**4**
6.	**CR, CRI, CRN 1, 3, 5**	**5**
6.1	Dismantling	5
6.2	Assembly	5
6.3	Fitting the lower shaft seal	5
7.	**CR, CRI, CRN 10, 15, 20**	**6**
7.1	Dismantling	6
7.2	Assembly	6
8.	**CR, CRN 32, 45, 64, 90**	**7**
8.1	Dismantling	7
8.2	Assembly	7
8.3	Fitting the lower shaft seal	8
9.	**CR, CRN 120, 150**	**9**
9.1	Dismantling	9
9.2	Assembly	9
10.	**Exploded views**	**11**

Warning

Prior to service work, read these service instructions carefully. Installation and service work must comply with local regulations and accepted codes of good practice.

Observe the safety instructions in the installation and operating instructions for the product.

1. Symbols used in this document

Warning

If these safety instructions are not observed, it may result in personal injury.

Warning

If these instructions are not observed, it may lead to electric shock with consequent risk of serious personal injury or death.

Caution ***If these safety instructions are not observed, it may result in malfunction or damage to the equipment.***

Note ***Notes or instructions that make the job easier and ensure safe operation.***

2. General information

Position numbers of parts (digits) refer to drawings and parts lists; position numbers of tools (letters) refer to section *5. Service tools*.

Warning

Use personal protective equipment if there is a risk of getting into contact with the pumped liquid.

Observe local regulations.

Before dismantling

Warning

Switch off the power supply and make sure that it cannot be accidentally switched on.

Check that other pumps or sources do not force flow through the pump even if the pump is stopped. This will cause the motor to act like a generator, resulting in voltage on the pump.

- Close the isolating valves, if fitted, and make sure that they cannot be accidentally opened.
- Before starting work on the product, let the product and pumped liquid cool off.

Before assembly

- Clean and check all parts.
- Replace defective parts with new parts.
- Always replace gaskets and O-rings.

During assembly

- Tighten screws and nuts according to section *3. Torques*.
- Lubricate rings and screws according to section *4. Lubricants*.

After assembly

- If analog or digital inputs, the relay output or the CIM module has been removed from the pump, you must check the communication with external units after service.

3. Torques

Pos.	Description	Pump	Dimensions	Torque
9	Coupling screws	1, 3, 5, 10, 15, 20	M6	13
			M8	31
			M10	62
		32, 45, 64, 90	-	85
		120, 150	M10	85
			M16	100
7a	Coupling guard screws	32, 45, 64, 90, 120, 150	-	6
18, 18a, 18b	Air vent screws	1, 3, 5, 10, 15, 20, 32, 45, 64, 90, 120, 150	-	35
23, 23a, 23b, 23c	Drain plugs			
28	Motor stool screws	1, 3, 5	M10	23
		1, 3, 5, 10, 15, 20	M6	10
			M8	12
			3/8" UNC	23
			M12	40
			1/2" UNC	40
		32, 45, 64, 90, 120, 150	-	62
36	Pump head nuts	CR 1, 3, 5	-	40
		CRI 1, 3, 5	-	50
		CRN 1, 3, 5	-	60
		CR, CRI 10, 15, 20	-	80
		CRN 10, 15, 20	-	100
		32, 45, 64, 90	-	100
		120, 150 (11-45 kW)	-	120
		120, 150 (55-75 kW)	-	80
58 a, 53d	Seal carrier screws	32, 45, 64, 90, 120, 150	-	62
105, 105b	Shaft seal	1, 3, 5, 10, 15, 20	-	35
106	Shaft seal nut	32, 45, 64, 90		30
113	Shaft seal set screws	1, 3, 5, 10, 15, 20	-	2,5
		32, 45, 64, 90, 120, 150	-	6

4. Lubricants

Pos.	Designation	Product No
9	THREAD-EZE	00SV9997
28, 28a		
58a, 58c, 58d		
51	Soapy Water	-
105, 105a, 105b		
37a, 37b, 37c	Rocol Sapphire Aqua-Sil	00RM2924
109, 109a, 109b		
110		

5. Service tools

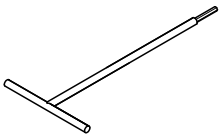
A

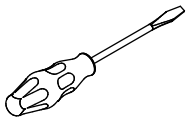
B

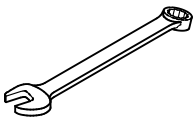
C

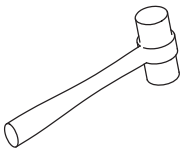
D

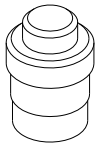
E

F

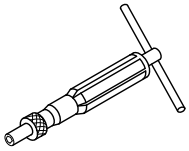
G

H

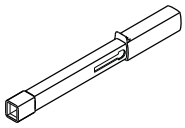
I

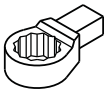
J

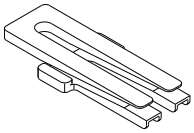
K

L

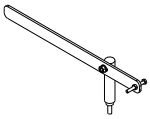
M

N

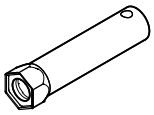
O

Pos.	Designation	For pos.	CR, CRI, CRN	Tool size	Product No
A	Tee Screwdriver	113	1, 3, 5, 10, 15, 20	2.5	-
			120, 150	3	SV0153
B	Slot screwdriver	7a	1, 3, 5, 10, 15, 20	1.4	-
C	Ring/open-end spanner	18, 18a, 23a, 23b	1, 3, 5, 10, 15, 20, 32, 45, 64, 90, 120, 150	24	SV0122
		28	1, 3, 5, 10, 15, 20	10 13 19	SV0083 SV0055 SV0054
			32, 45, 64, 90, 120, 150	8	SV0273
		36	1, 3, 5	19	SV0054
			10, 15, 20, 32, 45, 64, 90, 120, 150	24	SV0122
E	Rubber hammer				SV0349
F	Punch	105b	32, 45, 64, 90		SV0015
D	Hexagon key	9	1, 3, 5, 10, 15, 20	5 6 8	SV0196 SV0032
			32, 45, 64, 90	8	SV0032
			120, 150	8 10	SV0032 SV0033
		113	1, 3, 5, 10, 15, 20	2.5	SV0277
			32, 45, 64, 90, 120, 150	3	-
		28	32, 45, 64, 90, 120, 150	8	SV0032
		58a	32, 45, 64, 90, 120, 150	8	SV0032
G	Torque screwdriver	113, 7a	1, 3, 5, 10, 15, 20, 32, 45, 64, 90, 120, 150	1-6 Nm	SV0435 SV0438
H	Hexagon bit	9	1, 3, 5, 10, 15, 20	5 6 8	SV0010
			32, 45, 64, 90	8	SV0010
			120, 150	8 10	SV0010
		113	1, 3, 5, 10, 15, 20	2.5	SV0012
			120, 150	3	
		28	32, 45, 64, 90, 120, 150	8	SV0010
I	Torque wrench	28	1, 3, 5, 10, 15, 20	4-20 Nm	SV0092
		9, 18, 23,28, 36, 58	1, 3, 5, 10, 15, 20,32, 45, 64, 90, 120, 150	20-100 Nm	SV0269
		36	120, 150	40-200 Nm	SV0400
J	Ring insert tool	18, 18a, 23a, 23b	1, 3, 5, 10, 15, 20,32, 45, 64, 90, 120, 150	24	SV0524
		28	1, 3, 5, 10, 15, 20	10 13 19	SV0310 SV0513 SV0519
			32, 45, 64, 90, 120, 150	8	SV0411
		36	1, 3, 5	19	SV0519
			10, 15, 20, 32, 45, 64, 90, 120, 150	24	SV0524
K	Sliding guide	8	120, 150		-
L	Adjusting fork	105	10,15, 20		96483950
			32, 45, 64 90, 120, 150	22	985924
			120,150	32	96731316
M	Lifting tool	51	120,150		97536386
N	Eye bolt	28b	32, 45, 64 90, 120, 150		ID2779
O	Tabular box spanner	105, 105b	1, 3, 5, 10,15,20	36	SV2007

6. CR, CRI, CRN 1, 3, 5

6.1 Dismantling

1. Remove screws (pos. 7a) and coupling guards (pos. 7).
2. Remove screws (pos. 9), coupling (pos. 8) and shaft pin (pos. 10a).
3. Remove screws (pos. 28) and the motor.
4. Slacken socket screws (pos. 113) and remove shaft seal (pos. 105).
5. Remove nuts (pos. 36).
6. CR: Remove motor stool (pos. 2) and O-ring (pos. 37b).
   CRI, CRN: Remove motor stool (pos. 2), pump head cover (pos. 77) and O-ring (pos. 37b).
7. Slacken socket screws (pos. 113) and remove lower shaft seal parts (pos. 105b).
8. Remove cover (pos. 77a).
9. Continue the dismantling according to the instructions for dismantling of the standard CR pump.

6.2 Assembly

1. Fit O-ring (pos. 37a) and rubber spring (pos. 60) in cover (pos. 77a), and fit the cover on outer sleeve (pos. 55).
2. Fit the lower shaft seal according to *6.3 Fitting the lower shaft seal*.
3. CR: Fit O-ring (pos. 37b) in motor stool (pos. 2), and fit the stool on the cover.
   CRI, CRN: Fit O-ring (pos. 37b) in pump head cover (pos. 77), and fit the pump head cover and the motor stool on the cover.

Note ***Make sure that air vent screws (pos. 18 and 18a) are not positioned on the same side of the pump.***

4. Fit washer (pos. 66a) and cross-tighten nuts (pos. 36) on the staybolts.
5. Lubricate the shaft. Fit and tighten upper shaft seal (pos. 105) in motor stool (pos. 2) or pump head cover (pos. 77).
6. Press the pump shaft home, then lift it half way up. Hold it and tighten set screws (pos. 113).
7. Fit the motor and tighten screws (pos. 28).
8. Fit shaft pin (pos. 10a) in the shaft, coupling (pos. 8) and screws (pos. 9). See fig. 1.

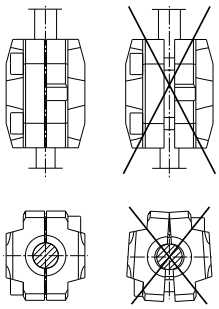

Fig. 1 Fitting the coupling

9. Check that the pump shaft can rotate freely.
10. Fit coupling guards (pos. 7), and tighten screws (pos. 7a).

6.3 Fitting the lower shaft seal

1. Lubricate the shaft. Fit the stationary part of the seal on the shaft, and tighten it to cover (pos. 77a).
2. Fit the other components one by one according to fig. 2.

Caution ***Do not touch the seal ring faces with the fingers or any greasy tool.***
Make sure that the polished face of the rotating seal ring faces downwards.

3. Press the cover down using a flat iron bar. See fig. 3.
4. Press the pump shaft down, and adjust the distance between driver tab (pos. 112b) and the top of the shaft according to fig. 2.
5. Tighten set screws (pos. 113).

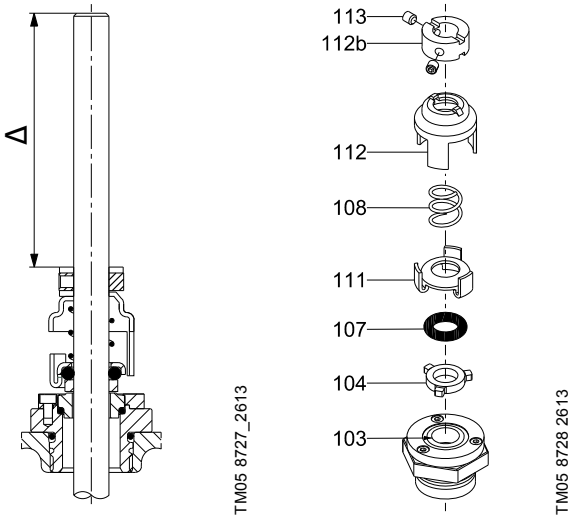

Fig. 2 Fitting the lower shaft seal

Pos.	Distance
Δ	86 mm

Pos.	Description
113	Socket screws
112b	Seal driver tab
112	Upper seal driver
111	Lower seal driver
108	Spring
107	O-ring
104	Rotating seal ring
103	Stationary seal ring

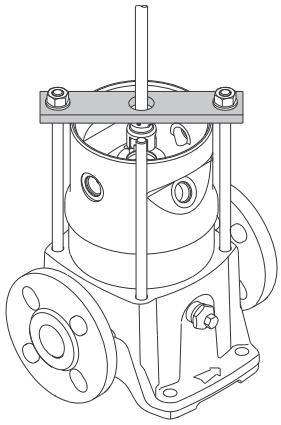

Fig. 3 Pressing the outer sleeve down

7. CR, CRI, CRN 10, 15, 20

7.1 Dismantling

1. Remove screws (pos. 7a) and coupling guards (pos. 7).
2. Remove screws (pos. 9), coupling (pos. 8) and shaft pin (pos. 10a).
3. Remove screws (pos. 28) and the motor.
4. Slacken socket screws (pos. 113), and remove upper shaft seal (pos. 105).
5. Remove air vent screw (pos. 18a) incover (pos. 77a).
6. Slacken set screws (pos. 113) of lower shaft seal (pos. 105b) through the hole for air vent screw (pos. 18a).
7. Remove nuts (pos. 36).
8. CR: Remove motor stool (pos. 2) and O-ring (pos. 37b).
   CRI, CRN: Remove motor stool (pos. 2), pump head cover (pos. 77) and O-ring (pos. 37b).
9. Remove cover (pos. 77a).
10. Remove lower shaft seal (pos. 105b).
11. Continue the dismantling according to the instructions for dismantling of the standard CR pump.

7.2 Assembly

1. Fit and tighten lower shaft seal (pos. 105b) in cover (pos. 77), from underneath.
2. Place O-ring (pos. 37a) and rubber springs (pos. 60) in cover (pos. 77a).
3. Lubricate the shaft and fit the cover on outer sleeve (pos. 55).
4. CR: Fit O-ring (pos. 37b) in motor stool (pos. 2), and fit the stool on the cover.
   CRI, CRN: Fit O-ring (pos. 37b) in pump head cover (pos. 2), and fit the pump head cover and the motor stool on the cover.

Note ***Make sure that air vent screws (pos. 18 and 18a) are not positioned on the same side of the pump.***

5. Fit washer (pos. 66a) and cross-tighten nuts (pos. 36).
6. Lubricate the shaft. Fit and tighten upper shaft seal (pos. 105) in stool (pos. 2) or pump head cover (pos. 77).
7. Press the shaft home, and tighten the socket screws of upper shaft seal (pos. 105).
8. Lift the shaft, and insert the adjusting fork under the shaft seal driver. See fig. 4.

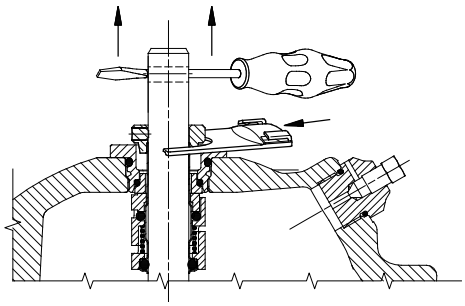

Fig. 4 Fitting the adjusting fork

9. Tighten the socket screws of lower shaft seal (pos. 105b) through the hole for air vent screw (pos. 18a).
10. Fit the motor and tighten screws (pos. 28).
11. Fit shaft pin (pos. 10a) in the shaft, coupling (pos. 8) and screws (pos. 9). See fig. 5.

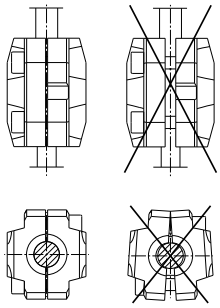

Fig. 5 Fitting the coupling

12. Remove the adjusting fork, and place it on the inside of one of the coupling guards (pos. 7).
13. Check that the pump shaft can rotate freely.
14. Fit coupling guards (pos. 7) and screws (pos. 7a).

8. CR, CRN 32, 45, 64, 90

8.1 Dismantling

1. Remove screws (pos. 7a) and coupling guards (pos. 7).
2. Remove screws (pos. 9) and coupling (pos. 8).
3. Attach the lifting device to eyebolts (pos. 28b).
4. Remove screws (pos. 28). Lift and remove the motor and motor stool (pos. 1a).

Caution ***To prevent the motor from tipping over, hold it straight when using a lifting device.***

5. Remove screws (pos. 58a) and retainer (pos. 58).
6. Clean the shaft end.
7. Slacken the three screws (pos. 113) of shaft seal (pos. 105).
8. Press shaft seal (pos. 105) out of upper secondary pump head (pos. 2a) using two slot screwdrivers (pos. B), and pull it off the shaft. See fig. 6.

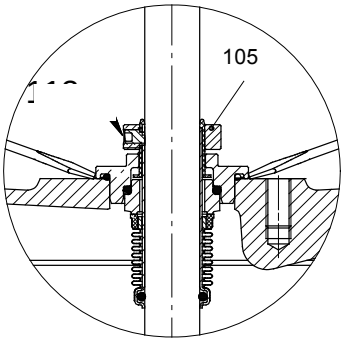

TM01 2027 0998

Fig. 6 Removing the upper shaft seal

9. Remove nuts (pos. 36).
10. Remove upper pump head (pos. 2a) and outer sleeve (pos. 55a). It may be necessary to loosen the upper pump head with a rubber hammer.
11. Slacken screws (pos. 113) of lower shaft seal (pos. 105b).
12. Pull rotating shaft seal part (pos. 108a) off the shaft.
13. Remove nut (pos. 106) of the lower shaft seal.
14. Remove washer (pos. 107).
15. Remove lower secondary pump head (pos. 2b). It may be necessary to loosen it with a rubber mallet.
16. Remove screws (pos. 58d) and retainer (pos. 58c).
17. Pull connecting pipe (pos. 149) and stationary shaft seal ring (pos. 108b) off the shaft.
18. Pull the stationary seal ring and O-rings (pos. 109a and 109b) out of the connecting pipe.
19. Remove spacing ring (pos.116) and pump head (pos. 2).
20. Remove O-ring (pos. 37) and rubber springs (pos. 60) from the pump head.
21. Continue the dismantling according to the instructions for dismantling of the standard CR pump.

8.2 Assembly

1. Fit rubber springs (pos. 60) and O-ring (pos. 37) in pump head (pos. 2).
2. Fit the pump head on outer sleeve (pos. 55).
3. Fit O-rings (pos. 109a and 109b) in connecting pipe (pos. 149).
4. Fit the connecting pipe and retainer (pos. 58c) in pump head (pos. 2). Fit and cross-tighten screws (pos. 58d).
5. Fit lower secondary pump head (pos. 2b) and outer sleeve (pos. 55a).
6. Fit the lower shaft seal in the connecting pipe according to *8.3 Fitting the lower shaft seal*.
7. Fit upper secondary pump head (pos. 2a).
8. Fit washers (pos. 66a) and cross-tighten nuts (pos. 36).
9. Lubricate the pump shaft and fit upper shaft seal (pos. 105) in upper secondary pump head (pos. 2a).
10. Fit retainer (pos. 58). Cross-tighten screws (pos. 58a).
11. Press the pump shaft home and tighten socket set screws (pos. 113) of the upper shaft seal.
12. Lift the pump shaft, and fit the adjusting fork. See fig. 7.

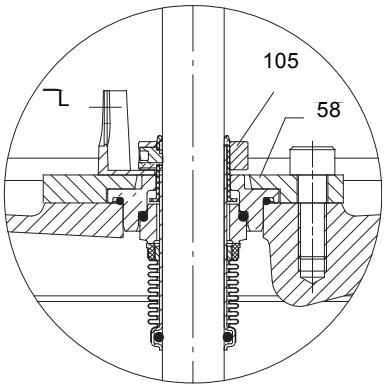

TM01 1927 0698

Fig. 7 Fitting the adjusting fork

13. Attach the lifting device to the eyebolts. Lift and fit the motor and motor stool on upper pump head (pos. 2a). Cross-tighten screws (pos. 28).

Caution ***To prevent the motor from tipping over, hold it straight when using a lifting device.***

14. Fit coupling (pos. 8) and tighten screws (pos. 9). See figures 8 and 9.

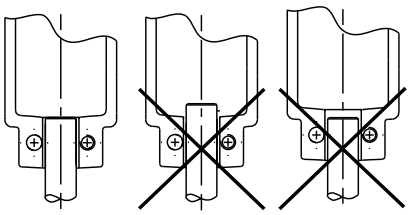

TM05 7578 1213

Fig. 8 Fitting the coupling

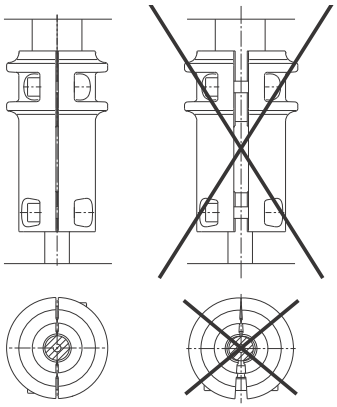

TM03 9607 4207

Fig. 9 Adjusting the coupling

15. Remove the adjusting fork, and place it under one of the screws (pos. 58).
16. Check that the pump shaft can rotate freely.
17. Fit coupling guards (pos. 7) and screws (pos. 7a).

8.3 Fitting the lower shaft seal

Caution ***Do not touch the seal faces with your fingers or any greasy tool. Use a punch to press the parts down along the shaft.***

1. Fit stationary seal ring (pos. 108b) in connecting pipe (pos. 149).
2. Fit washer (pos. 107) and tighten nut (pos. 106) to the connecting pipe.
3. Fit rotating shaft seal part (pos. 108a). Press it home until it makes contact with the stationary seal face.
4. Press the pump shaft home and tighten socket screws (pos. 113).
5. Press pump head (pos. 2) down and press the pump shaft home.
6. Press the rotating shaft seal part down, leave the distance (Δ) between the driver tab and the nut, and tighten socket screws (pos. 113). See fig. 10.

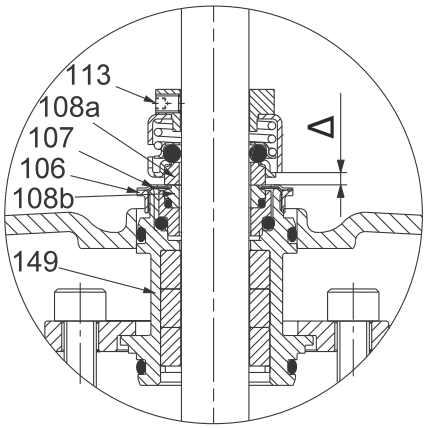

TM03 8403 1307

Fig. 10 Fitting the lower shaft seal

Pos.	Distance
Δ	2.5 mm

Pos.	Description
106	Nut
107	Washer
108a	Rotating shaft seal part
108b	Stationary seal ring
113	Socket screws
149	Connecting pipe

9. CR, CRN 120, 150

9.1 Dismantling

1. Remove screws (pos. 7a) and coupling guards (pos. 7).
2. Remove screws (pos. 9) and coupling (pos. 8).
3. Attach the lifting device to eyebolts (pos. 28b).
4. Remove hexagon socket screws (pos. 28).
5. 55-75 kW: Remove washers (pos. 66a) and nuts (pos. 36) from the motor stool.
6. Lift and remove the motor and motor stool (pos. 1a).

Caution ***To prevent the motor from tipping over, hold it straight when using a lifting device.***

7. Remove screws (pos. 58a)
8. 11-45 kW: Remove retainer (pos. 58).
9. Clean shaft (pos. 51), and slacken by 1/2 turn the socket screws (pos. 113) of shaft seal (pos. 105a).

Note ***Slacken the screws only so much that the shaft seal can be removed from the shaft.***

10. Pull upper shaft seal (pos. 105a) off pump head (pos. 2) using two slot screwdrivers. See fig. 11.

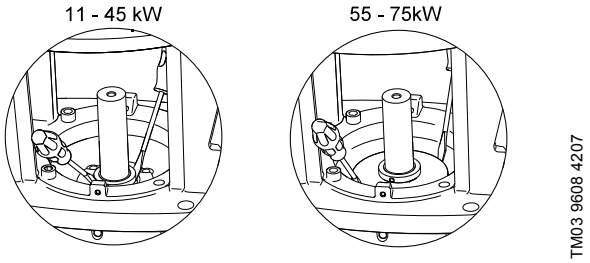

Fig. 11 Removing the upper shaft seal

11. Remove one of the lower air vent screws (pos. 18b) or drain plugs (pos. 23b) from lower pump head (pos. 2b).
12. Rotate the shaft until one of the socket screws (pos. 113) of lower shaft seal (pos. 105b) faces the hole. Slacken socket screw (pos. 113), using the tee key.
    Repeat this sequence for the two other socket screws.
    See fig. 12.

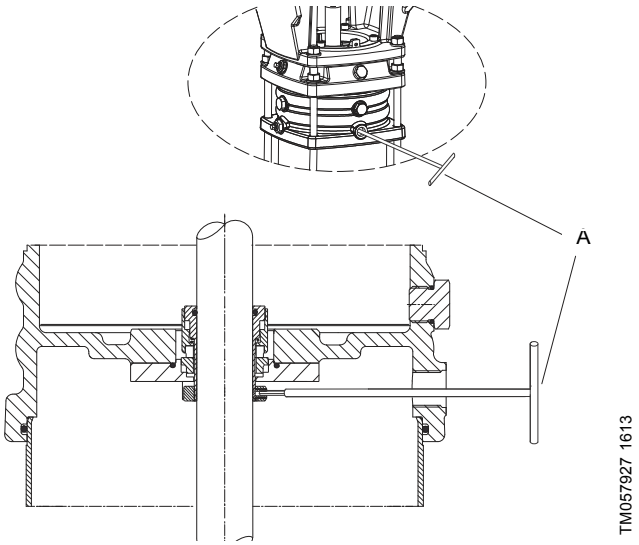

Fig. 12 Slackening the screws of the lower shaft seal

13. Remove nuts (pos. 36) and washer (pos. 66a) from upper pump head (pos. 2).
14. Remove upper pump head (pos. 2); it may be necessary to loosen it with a rubber hammer.
15. Clean the shaft above lower shaft seal (pos. 105b) and remove lower pump head (pos. 2b) with the shaft seal. It may be necessary to loosen it with a rubber hammer.
16. Remove screws (pos. 58c).
17. 11-45 kW: Remove retainer (pos. 58b).
18. Pull lower shaft seal (pos. 105b) off lower pump head (pos. 2b) using two slot screwdrivers.
19. Continue the dismantling according to the instructions for dismantling of the standard CR pump.

9.2 Assembly

1. Lubricate the pump shaft.
2. Fit lower shaft seal (pos. 105b) in position in lower pump head (pos. 2b).
3. 11-45 kW: Fit retainer (pos. 58b).
4. Cross-tighten screws (pos. 58c).
5. Fit O-ring (pos. 37a) in lower pump head (pos. 2b).
6. Carefully fit and press lower pump head (pos. 2b) down on the shaft. Press it with even force on outer sleeve (pos. 55).

Caution ***Be sure not to damage the lower shaft seal when fitting the lower pump head.***

7. Fit O-ring (pos. 37b) in upper pump head (pos. 2) and the upper pump head on to lower pump head (pos. 2b).

Note ***Make sure that upper and lower air vent screws (pos. 18 and 18a) are positioned on the same side.***

8. Fit washers (pos. 66a) and cross-tighten nuts (pos. 36).
9. Fit upper shaft seal (pos. 105a).
10. Remove excess grease from shaft end (pos. 51) using a cloth.
11. 11-45 kW: Fit retainer (pos. 58).
12. Cross-tighten screws (pos. 58a).
13. Press the shaft home, and tighten socket screws (pos. 113) of upper shaft seal (pos. 105a).
14. Attach the lifting device to eyebolt (pos. 28b). Carefully lift the motor with the stool, and fit it on pump head (pos.2).

Caution ***To prevent the motor from tipping over, hold it straight when using a lifting device.***

15. Turn the motor and motor stool (pos. 1a) to the required terminal box position, according to the installation instructions.
16. Cross-tighten screws (pos. 28).
17. 55-75 kW: Fit washers (pos. 66a) and cross-tighten nuts (pos. 36).
18. Lift the pump shaft with the lifting tool. See fig. 13.

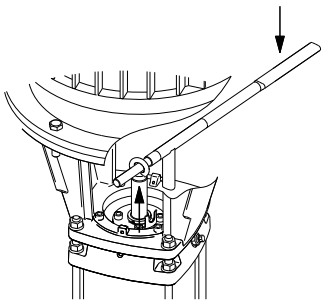

TM03 9609 4207

Fig. 13 Lifting the pump shaft

19. Insert two adjusting forks between the shaft seal driver and its retainer. See fig. 14.

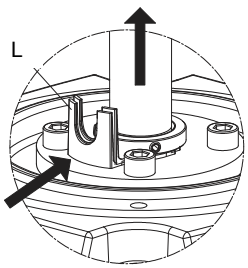

TM04 5027 2409

Fig. 14 Inserting the adjusting forks

20. Tighten socket screws (pos. 113) of lower shaft seal (pos. 105b) through one of the holes of the air vent screw or drain plugs, using a torque screwdriver. See fig. 15.

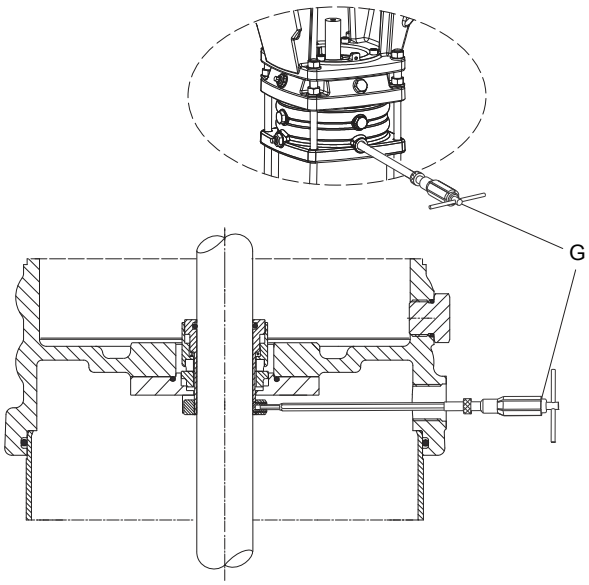

TM04 5033 2409

Fig. 15 Tightening the screws of the lower shaft seal.

21. Remove one of the adjusting forks, and place it under one of the screws (pos. 58a). See fig. 16.

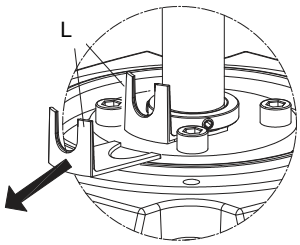

TM04 5020 2409

Fig. 16 Removing one of the adjusting forks and storing it under one of the screws

22. Fit coupling (pos. 8) on the shaft using the sliding guide or with your hand, depending on the coupling size. The top of pump shaft (pos. 51) must be flush with the bottom of the coupling clearance chamber. See figures 17 and 18.

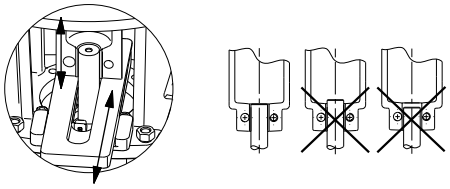

TM03 9607 4207

Fig. 17 Fitting the coupling

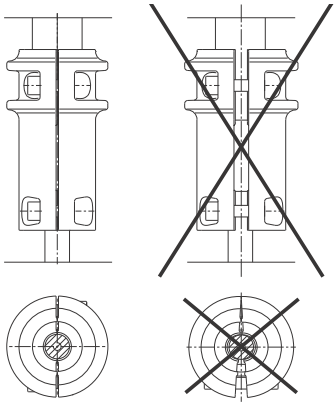

TM03 9607 4207

Fig. 18 Adjusting the coupling

23. Tighten screws (pos. 9), but leave them loose.
24. Make sure that the gaps on either side of the coupling halves are equal and tighten screws (pos. 9) two and two, one side at a time.
25. Remove the last adjusting fork, and place it under one of the other screws (pos. 58a).
26. Check that the pump shaft can rotate freely.
27. Fit coupling guards (pos. 7) and screws (pos. 7a).

10. Exploded views

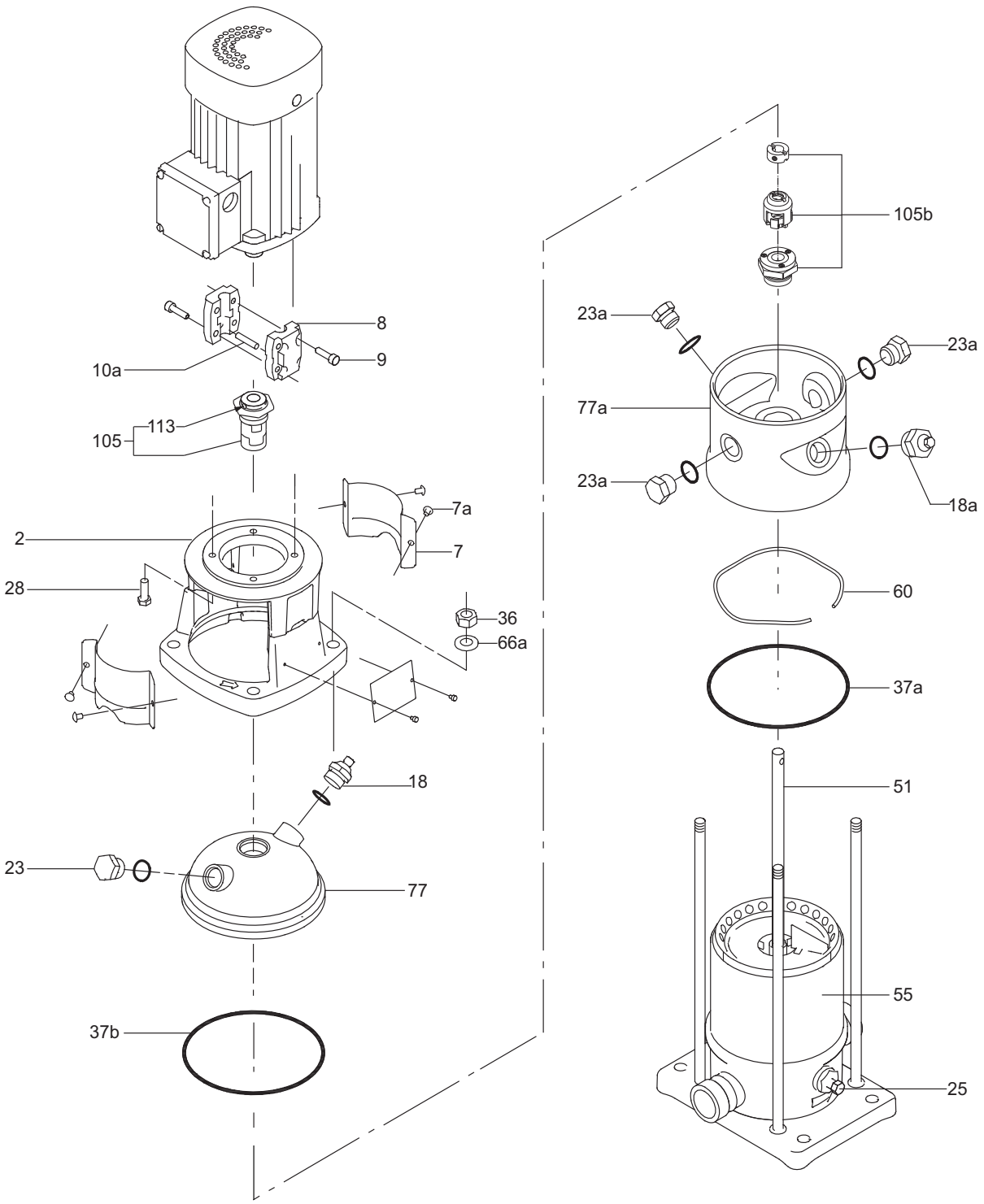

Fig. 19 Exploded view, CR, CRI, CRN 1, 3, 5

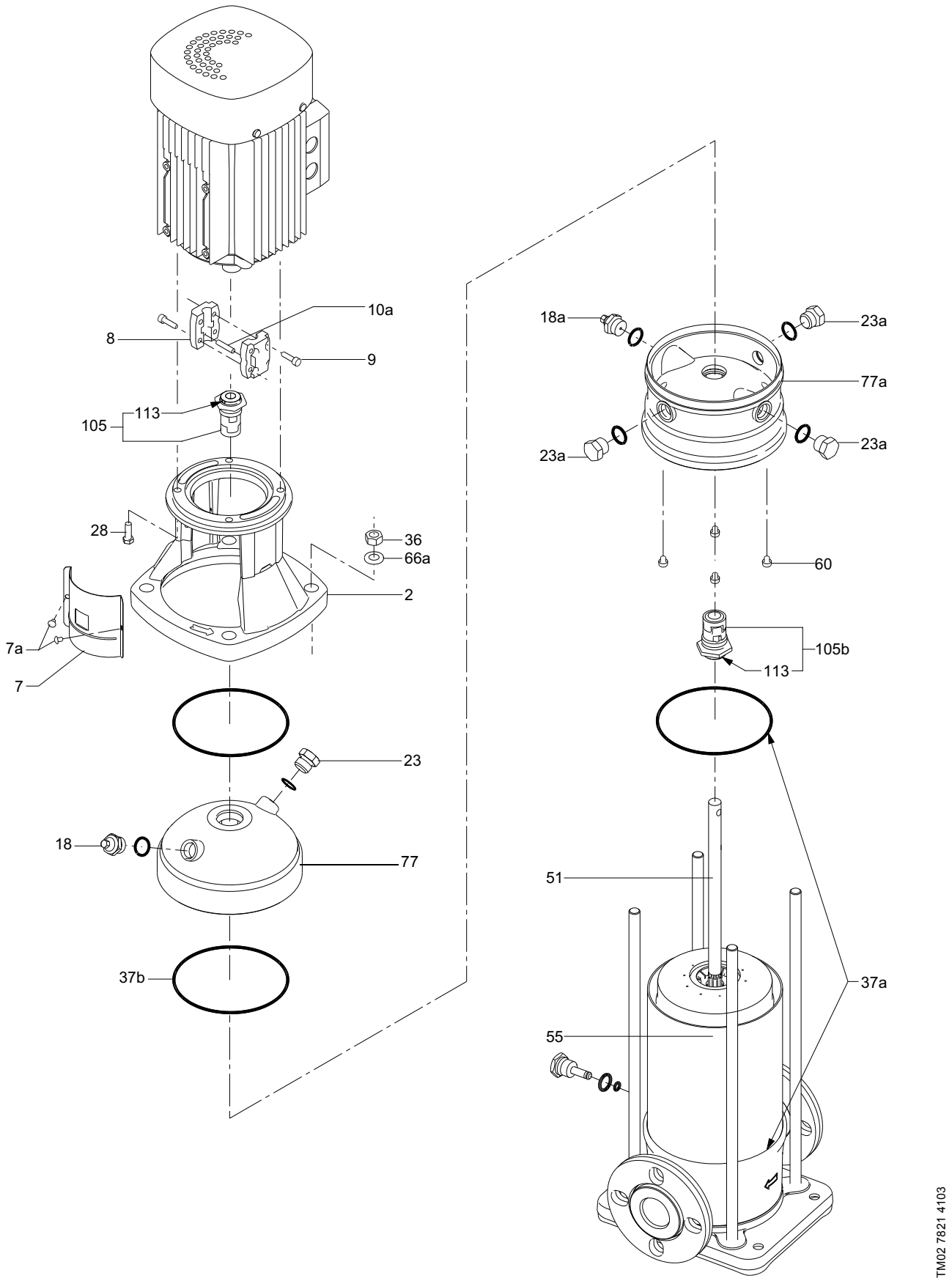

Fig. 20 Exploded view, CR, CRI, CRN 10, 15, 20

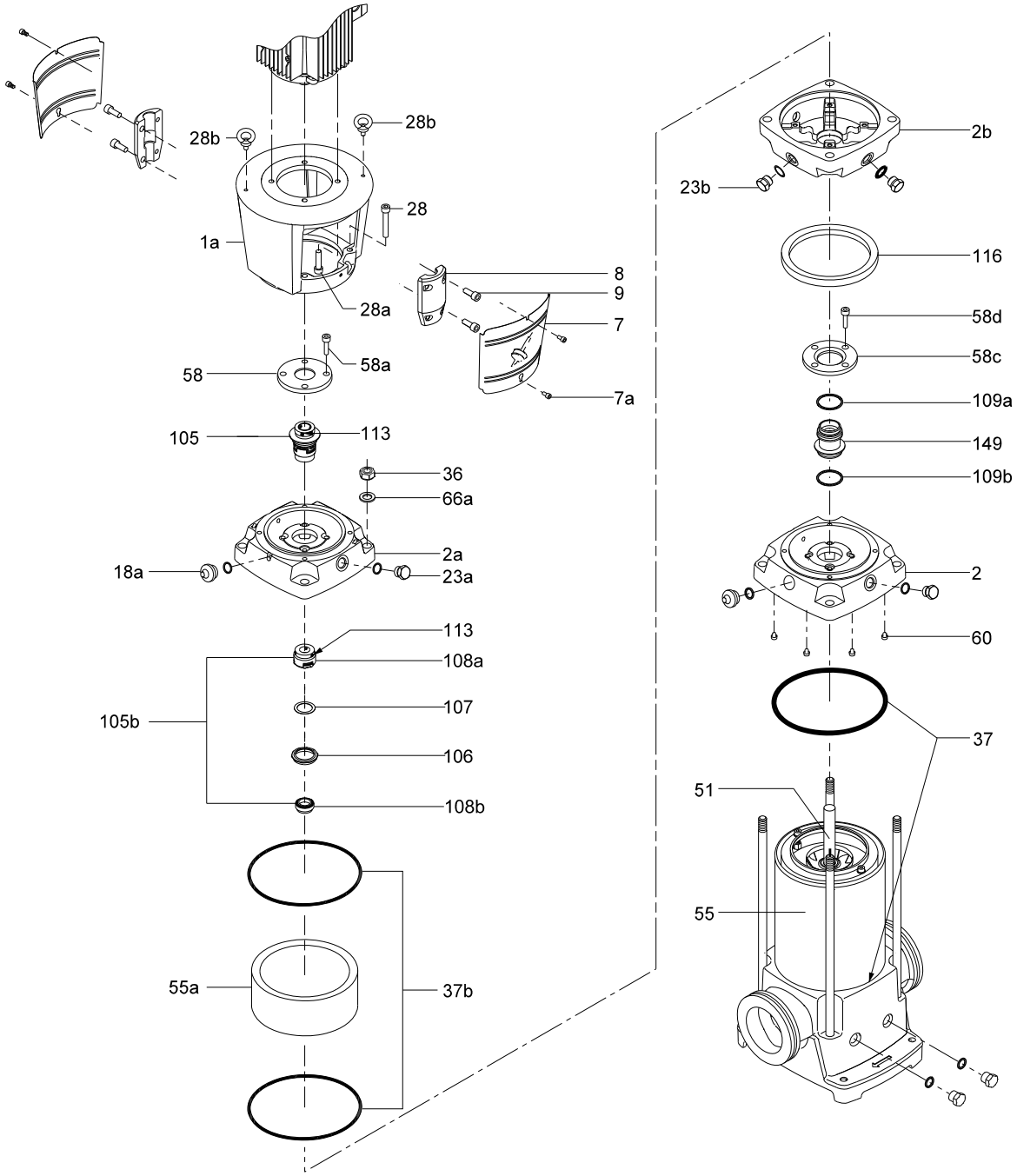

Fig. 21 Exploded view, CR, CRN 32, 45, 64, 90

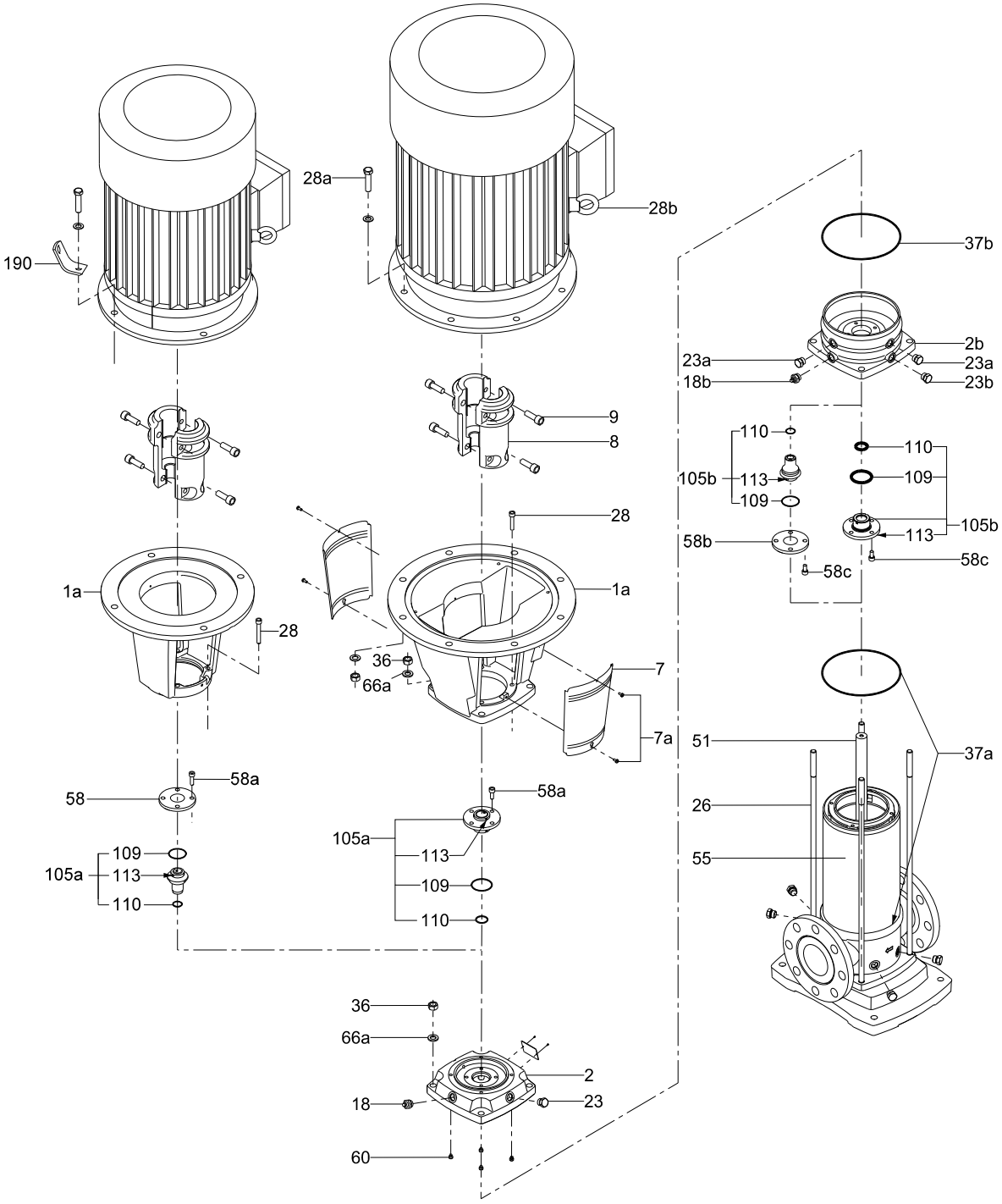

Fig. 22 Exploded view, CR, CRN 120, 150

Argentina
Bombas GRUNDFOS de Argentina S.A.
Ruta Panamericana km. 37.500 Centro Industrial Garin
1619 Garín Pcia. de B.A.
Phone: +54-3327 414 444
Telefax: +54-3327 45 3190

Australia
GRUNDFOS Pumps Pty. Ltd.
P.O. Box 2040
Regency Park
South Australia 5942
Phone: +61-8-8461-4611
Telefax: +61-8-8340 0155

Austria
GRUNDFOS Pumpen Vertrieb Ges.m.b.H.
Grundfosstraße 2
A-5082 Grödig/Salzburg
Tel.: +43-6246-883-0
Telefax: +43-6246-883-30

Belgium
N.V. GRUNDFOS Bellux S.A.
Boomsesteenweg 81-83
B-2630 Aartselaar
Tél.: +32-3-870 7300
Télécopie: +32-3-870 7301

Belarus
Представительство ГРУНДФОС в Минске
220125, Минск
ул. Шафарнянская, 11, оф. 56, БЦ «Порт»
Тел.: +7 (375 17) 286 39 72/73
Факс: +7 (375 17) 286 39 71
E-mail: minsk@grundfos.com

Bosnia/Herzegovina
GRUNDFOS Sarajevo
Trg Heroja 16,
BiH-71000 Sarajevo
Phone: +387 33 713 290
Telefax: +387 33 659 079
e-mail: grundfos@bih.net.ba

Brazil
BOMBAS GRUNDFOS DO BRASIL
Av. Humberto de Alencar Castelo Branco, 630
CEP 09850 - 300
São Bernardo do Campo - SP
Phone: +55-11 4393 5533
Telefax: +55-11 4343 5015

Bulgaria
Grundfos Bulgaria EOOD
Slatina District
Iztochna Tangenta street no. 100
BG - 1592 Sofia
Tel. +359 2 49 22 200
Fax. +359 2 49 22 201
email: bulgaria@grundfos.bg

Canada
GRUNDFOS Canada Inc.
2941 Brighton Road
Oakville, Ontario
L6H 6C9
Phone: +1-905 829 9533
Telefax: +1-905 829 9512

China
GRUNDFOS Pumps (Shanghai) Co. Ltd.
50/F Maxdo Center No. 8 XingYi Rd.
Hongqiao development Zone
Shanghai 200336
PRC
Phone: +86 21 612 252 22
Telefax: +86 21 612 253 33

Croatia
GRUNDFOS CROATIA d.o.o.
Cebini 37, Buzin
HR-10010 Zagreb
Phone: +385 1 6595 400
Telefax: +385 1 6595 499
www.grundfos.hr

Czech Republic
GRUNDFOS s.r.o.
Čajkovského 21
779 00 Olomouc
Phone: +420-585-716 111
Telefax: +420-585-716 299

Denmark
GRUNDFOS DK A/S
Martin Bachs Vej 3
DK-8850 Bjerringbro
Tlf.: +45-87 50 50 50
Telefax: +45-87 50 51 51
E-mail: info_GDK@grundfos.com
www.grundfos.com/DK

Estonia
GRUNDFOS Pumps Eesti OÜ
Peterburi tee 92G
11415 Tallinn
Tel: + 372 606 1690
Fax: + 372 606 1691

Finland
OY GRUNDFOS Pumput AB
Mestarintie 11
FIN-01730 Vantaa
Phone: +358-(0)207 889 900
Telefax: +358-(0)207 889 550

France
Pompes GRUNDFOS Distribution S.A.
Parc d'Activités de Chesnes
57, rue de Malacombe
F-38290 St. Quentin Fallavier (Lyon)
Tél.: +33-4 74 82 15 15
Télécopie: +33-4 74 94 10 51

Germany
GRUNDFOS GMBH
Schlüterstr. 33
40699 Erkrath
Tel.: +49-(0) 211 929 69-0
Telefax: +49-(0) 211 929 69-3799
e-mail: infoservice@grundfos.de
Service in Deutschland:
e-mail: kundendienst@grundfos.de

HILGE GmbH & Co. KG
Hilgestrasse 37-47
55292 Bodenheim/Rhein
Germany
Tel.: +49 6135 75-0
Telefax: +49 6135 1737
e-mail: hilge@hilge.de

Greece
GRUNDFOS Hellas A.E.B.E.
20th km. Athinon-Markopoulou Av.
P.O. Box 71
GR-19002 Peania
Phone: +0030-210-66 83 400
Telefax: +0030-210-66 46 273

Hong Kong
GRUNDFOS Pumps (Hong Kong) Ltd.
Unit 1, Ground floor
Siu Wai Industrial Centre
29-33 Wing Hong Street &
68 King Lam Street, Cheung Sha Wan
Kowloon
Phone: +852-27861706 / 27861741
Telefax: +852-27858664

Hungary
GRUNDFOS Hungária Kft.
Park u. 8
H-2045 Törökbálint,
Phone: +36-23 511 110
Telefax: +36-23 511 111

India
GRUNDFOS Pumps India Private Limited
118 Old Mahabalipuram Road
Thoraipakkam
Chennai 600 096
Phone: +91-44 2496 6800

Indonesia
PT GRUNDFOS Pompa
Jl. Rawa Sumur III, Blok III / CC-1
Kawasan Industri, Pulogadung
Jakarta 13930
Phone: +62-21-460 6909
Telefax: +62-21-460 6910 / 460 6901

Ireland
GRUNDFOS (Ireland) Ltd.
Unit A, Merrywell Business Park
Ballymount Road Lower
Dublin 12
Phone: +353-1-4089 800
Telefax: +353-1-4089 830

Italy
GRUNDFOS Pompe Italia S.r.l.
Via Gran Sasso 4
I-20060 Truccazzano (Milano)
Tel.: +39-02-95838112
Telefax: +39-02-95309290 / 95838461

Japan
GRUNDFOS Pumps K.K.
Gotanda Metalion Bldg., 5F,
5-21-15, Higashi-gotanda
Shiagawa-ku, Tokyo
141-0022 Japan
Phone: +81 35 448 1391
Telefax: +81 35 448 9619

Korea
GRUNDFOS Pumps Korea Ltd.
6th Floor, Aju Building 679-5
Yeoksam-dong, Kangnam-ku, 135-916
Seoul, Korea
Phone: +82-2-5317 600
Telefax: +82-2-5633 725

Latvia
SIA GRUNDFOS Pumps Latvia
Deglava biznesa centrs
Augusta Deglava ielā 60, LV-1035, Rīga,
Tālr.: + 371 714 9640, 7 149 641
Fakss: + 371 914 9646

Lithuania
GRUNDFOS Pumps UAB
Smolensko g. 6
LT-03201 Vilnius
Tel: + 370 52 395 430
Fax: + 370 52 395 431

Malaysia
GRUNDFOS Pumps Sdn. Bhd.
7 Jalan Peguam U1/25
Glenmarie Industrial Park
40150 Shah Alam
Selangor
Phone: +60-3-5569 2922
Telefax: +60-3-5569 2866

Mexico
Bombas GRUNDFOS de México S.A. de C.V.
Boulevard TLC No. 15
Parque Industrial Stiva Aeropuerto
Apodaca, N.L. 66600
Phone: +52-81-8144 4000
Telefax: +52-81-8144 4010

Netherlands
GRUNDFOS Netherlands
Veluwezoom 35
1326 AE Almere
Postbus 22015
1302 CA ALMERE
Tel.: +31-88-478 6336
Telefax: +31-88-478 6332
E-mail: info_gnl@grundfos.com

New Zealand
GRUNDFOS Pumps NZ Ltd.
17 Beatrice Tinsley Crescent
North Harbour Industrial Estate
Albany, Auckland
Phone: +64-9-415 3240
Telefax: +64-9-415 3250

Norway
GRUNDFOS Pumper A/S
Strømsveien 344
Postboks 235, Leirdal
N-1011 Oslo
Tlf.: +47-22 90 47 00
Telefax: +47-22 32 21 50

Poland
GRUNDFOS Pompy Sp. z o.o.
ul. Klonowa 23
Baranowo k. Poznania
PL-62-081 Przeźmierowo
Tel: (+48-61) 650 13 00
Fax: (+48-61) 650 13 50

Portugal
Bombas GRUNDFOS Portugal, S.A.
Rua Calvet de Magalhães, 241
Apartado 1079
P-2770-153 Paço de Arcos
Tel.: +351-21-440 76 00
Telefax: +351-21-440 76 90

Romania
GRUNDFOS Pompe România SRL
Bd. Biruintei, nr 103
Pantelimon county Ilfov
Phone: +40 21 200 4100
Telefax: +40 21 200 4101
E-mail: romania@grundfos.ro

Russia
ООО Грундфос Россия
109544, г. Москва, ул. Школьная, 39-41, стр. 1
Тел. (+7) 495 564-88-00 (495) 737-30-00
Факс (+7) 495 564 88 11
E-mail grundfos.moscow@grundfos.com

Serbia
GRUNDFOS Predstavništvo Beograd
Dr. Milutina Ivkovića 2a/29
YU-11000 Beograd
Phone: +381 11 26 47 877 / 11 26 47 496
Telefax: +381 11 26 48 340

Singapore
GRUNDFOS (Singapore) Pte. Ltd.
25 Jalan Tukang
Singapore 619264
Phone: +65-6681 9688
Telefax: +65-6681 9689

Slovenia
GRUNDFOS d.o.o.
Šlandrova 8b, SI-1231 Ljubljana-Črnuče
Phone: +386 1 568 0610
Telefax: +386 1 568 0619
E-mail: slovenia@grundfos.si

South Africa
GRUNDFOS (PTY) LTD
Corner Mountjoy and George Allen Roads
Wilbart Ext. 2
Bedfordview 2008
Phone: (+27) 11 579 4800
Fax: (+27) 11 455 6066
E-mail: lsmart@grundfos.com

Spain
Bombas GRUNDFOS España S.A.
Camino de la Fuentecilla, s/n
E-28110 Algete (Madrid)
Tel.: +34-91-848 8800
Telefax: +34-91-628 0465

Sweden
GRUNDFOS AB
Box 333 (Lunnagårdsgatan 6)
431 24 Mölndal
Tel.: +46 31 332 23 000
Telefax: +46 31 331 94 60

Switzerland
GRUNDFOS Pumpen AG
Bruggacherstrasse 10
CH-8117 Fällanden/ZH
Tel.: +41-1-806 8111
Telefax: +41-1-806 8115

Taiwan
GRUNDFOS Pumps (Taiwan) Ltd.
7 Floor, 219 Min-Chuan Road
Taichung, Taiwan, R.O.C.
Phone: +886-4-2305 0868
Telefax: +886-4-2305 0878

Thailand
GRUNDFOS (Thailand) Ltd.
92 Chaloem Phrakiat Rama 9 Road,
Dokmai, Pravej, Bangkok 10250
Phone: +66-2-725 8999
Telefax: +66-2-725 8998

Turkey
GRUNDFOS POMPA San. ve Tic. Ltd. Sti.
Gebze Organize Sanayi Bölgesi
Ihsan dede Caddesi,
2. yol 200. Sokak No. 204
41490 Gebze/ Kocaeli
Phone: +90 - 262-679 7979
Telefax: +90 - 262-679 7905
E-mail: satis@grundfos.com

Ukraine
ТОВ ГРУНДФОС УКРАЇНА
01010 Київ, Вул. Московська 8б,
Тел.:(+38 044) 390 40 50
Фах.: (+38 044) 390 40 59
E-mail: ukraine@grundfos.com

United Arab Emirates
GRUNDFOS Gulf Distribution
P.O. Box 16768
Jebel Ali Free Zone
Dubai
Phone: +971 4 8815 166
Telefax: +971 4 8815 136

United Kingdom
GRUNDFOS Pumps Ltd.
Grovebury Road
Leighton Buzzard/Beds. LU7 4TL
Phone: +44-1525-850000
Telefax: +44-1525-850011

U.S.A.
GRUNDFOS Pumps Corporation
17100 West 118th Terrace
Olathe, Kansas 66061
Phone: +1-913-227-3400
Telefax: +1-913-227-3500

Uzbekistan
Grundfos Tashkent, Uzbekistan The Representative Office of Grundfos Kazakhstan in Uzbekistan
38a, Oybek street, Tashkent
Телефон: (+998) 71 150 3290 / 71 150 3291
Факс: (+998) 71 150 3292

Addresses Revised 24.10.2013

© Copyright Grundfos Holding A/S

The name Grundfos, the Grundfos logo, and **be think innovate** are registered trademarks owned by Grundfos Holding A/S or Grundfos A/S, Denmark. All rights reserved worldwide.

96531033 1113

ECM: 1123001