Hydro Solo-E and Hydro Solo-E Optimum

Complete Booster Systems 50/60 Hz

GRUNDFOS

Table of contents

1. Product introduction 3
Features and benefits 3
Applications 3
Construction. 3
Performance range 4
Identification. 6

2. Installation and operation 7
Mechanical installation. 7
Electrical connection 8
Reset after water shortage 9
Control of CRE pumps. 10

3. Hydro Solo-E Optimum 11
Features and benefits of Optimum range 12
Protection features 12
Operating panel 13
Performance curves 14
Technical data 15

4. Hydro Solo-E 17
Features and benefits 17
Protection features 17
Operating panel 18
Technical data 18

5. Accessories 29
Fieldbus communication interfaces 29
Grundfos GO 29
Float switch 29
EMC filter. 29

6. Product numbers 30

7. Grundfos Product Center 32

8. Document quality feedback. 33

1. Product introduction

TM076248

Left to right: Hydro Solo-E Optimum, Hydro Solo-E

Hydro Solo-E Optimum

Hydro Solo-E Optimum is a fully-optimised package with constant-pressure control, flow estimation and plug-and-pump installation for immediate, always-optimised operation. The built-in display provides a real-time overview of booster set performance.

Hydro Solo-E

The Hydro Solo-E booster system is a turnkey solution enabling you to keep a constant pressure in your system at all times. Hydro Solo-E consists of a Grundfos CRE pump fitted with isolating valve, non-return valve, outlet pipe, pressure transmitter, pressure gauge and pressure tank. Hydro Solo-E is ready for operation on delivery.

Features and benefits

- Easy installation
- constant pressure
- speed-controlled pump
- low energy consumption
- no need for motor protection
- compact design.

Applications

Hydro Solo-E is designed for systems where it is crucial to keep a constant pressure. This makes Hydro Solo-E suitable for these applications:

- Cluster homes
- blocks of flats
- schools
- hotels or guest houses
- office buildings
- industrial water supply systems
- water treatment systems
- water filtration systems
- small industries
- washing and cleaning systems.

Construction

	Hydro Solo-E	Hydro Solo-E Optimum
Pump	CRE	CRIE
Inlet manifold	-	✓
Outlet manifold	✓	✓
Dry-running protection	- [1]	✓
Base plate	-	✓
Vibration dampers	-	✓
Non-return valve	✓	✓
Isolating valve	✓	✓
Pressure transmitter	✓	✓
Pressure gauge	✓	-
Pressure tank with Flowjet	✓	✓
Display	-	✓

1) Dry-running protection can be added to Hydro Solo-E variants as an accessory.

Performance range

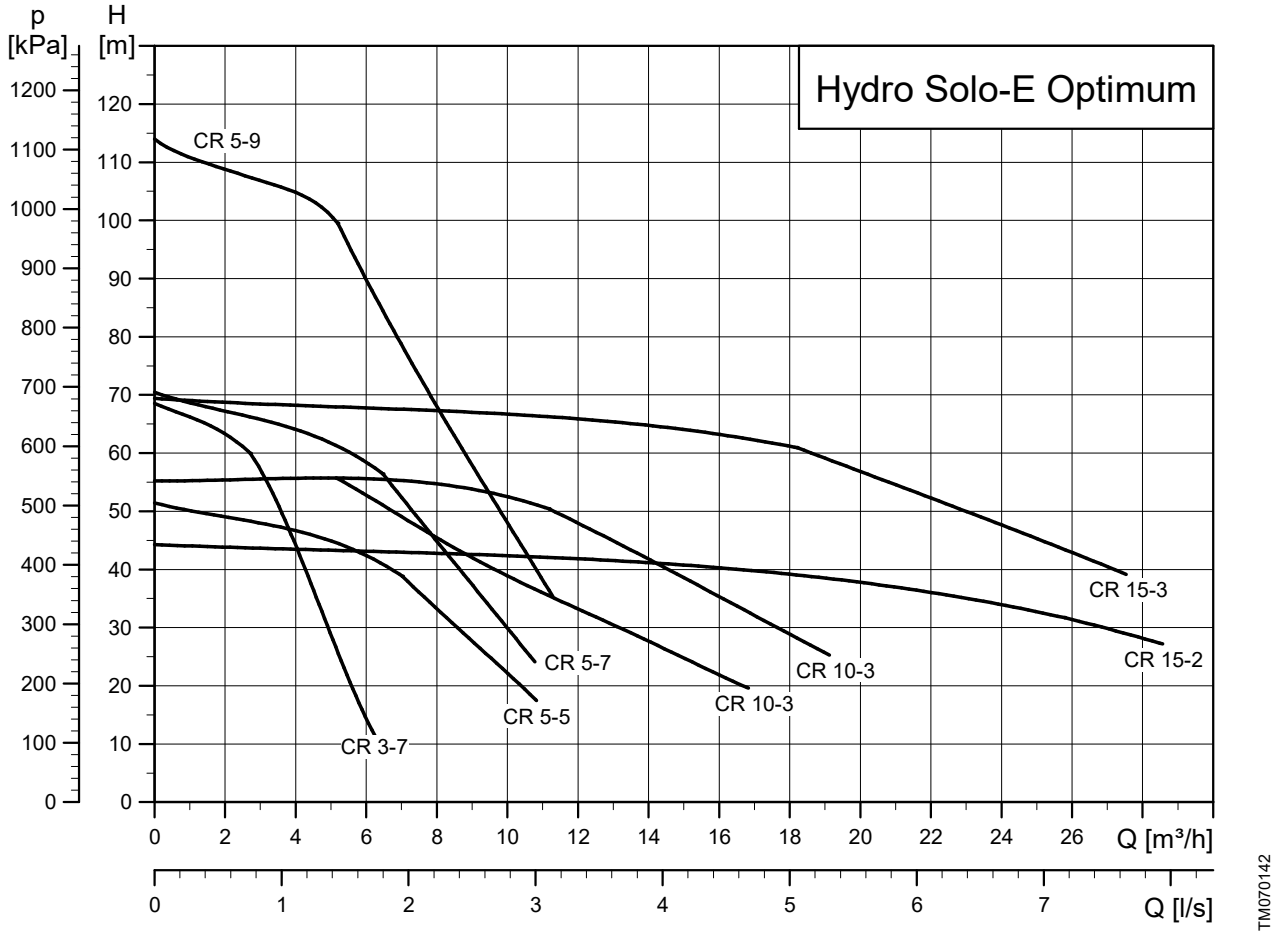

Hydro Solo-E Optimum performance range

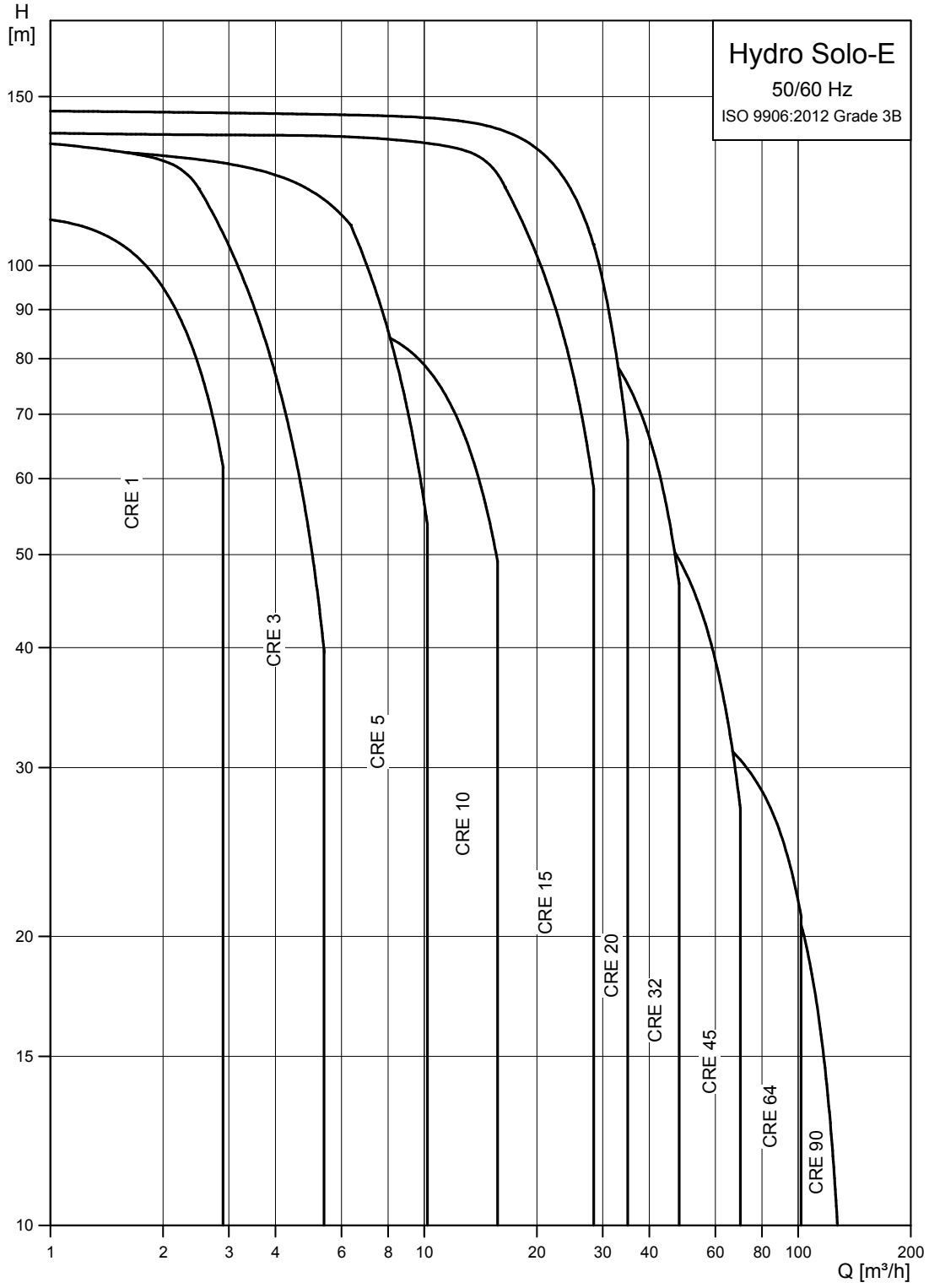

TM059028

Hydro Solo-E performance range

Identification

Type key

Example: Hydro Solo-E CRE 15-3 U8 A- A- A- A- ABCDE

Code	Explanation	Designation
Hydro Solo		Product name
E	E: The motor has a built-in frequency converter.	System type
CRE X-Y CRIE X-Y	CRE: Cast-iron and stainless-steel materials CRIE: Stainless-steel materials only X: Flow rate m^3/h Y: Number of impellers	Pump model
UM	3 × 380 - 500 V, PE, 50/60 Hz	Supply voltage
U2	3 × 380 - 415 V, PE, 50/60 Hz	
U7	1 × 200 - 240 V, PE, 50/60 Hz	
U8	1 × 200 - 240 V, N, PE, 50/60 Hz	
UX	Custom voltage rating (CSU variant)	
A	Standard range	Pump design
C	Optimum	
A	Electronic (frequency converter)	Starting method
A	Stainless-steel outlet manifold	Material combination
B	Stainless-steel outlet manifold and stainless steel inlet manifold	
C	Galvanised-steel manifold	
D	Galvanised-steel manifold and base frame	
X	Customised	
A	ACS-approved components	Drinking water approvals
B	Belgaqua-approved components	
D	DVGW-approved components	
K	KIWA-approved components	
N	NFS-approved components	
V	WRAS-approved components	
Y	No special approval	
A	Standard hydraulics	Option
B	Base frame	
C	Base frame with machine shoes	
D	Sensor as dry-running protection	
E	Pressure switch as dry-running protection	
F	Level switch for dry-running protection	
G	CIM included	
H	Without non-return valve	
L	Non-return valve on the inlet side	
M	Pressure gauge on the inlet side	
S	CSU variant	
U	Undersized motor	
X	More than five options	

2. Installation and operation

Mechanical installation

Location

The booster system is not designed for outdoor installation and must not be exposed to direct sunlight. Allow sufficient clearance around the booster system to enable the operator to work freely.

Enclosure class	Pump: IP55 Sensor: IP44
Insulation class	F

Install the booster system in a well-ventilated room to ensure sufficient cooling of the pump.

Pipes

The system in which Hydro Solo-E is incorporated must be designed for the maximum pump pressure. The pipes connected to the booster system must be of adequate size. To avoid resonance, expansion joints (1) must be fitted both in the outlet and inlet pipes. Connect the pipes to the outlet pipe and the pump inlet port.

Tighten the booster system before startup. We recommend fitting pipe supports (2) on the inlet and outlet side.

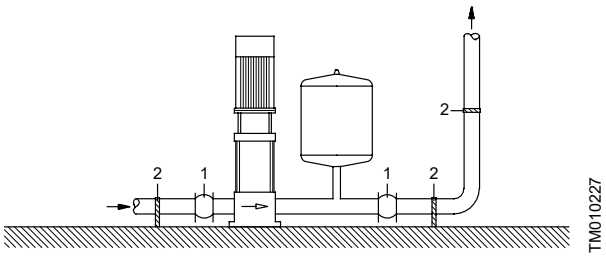

Pipes

Foundation

Position the booster system on an even and solid surface, such as a concrete floor or foundation. If the booster system is not fitted with vibration dampers, bolt it to the floor or foundation.

Pressure tank

The pressure tank is precharged to 1.9 bar. A new precharge pressure must be calculated to obtain the optimum duty.

Calculation of precharge pressure: precharge pressure is equal to 0.7 × setpoint. Measure the precharge pressure of the pressure tank in a pressureless system.

We recommend that you refill the tank with nitrogen.

Electrical connection

The 4.0 - 7.5 kW motors must be connected to especially reliable and sturdy earth connections due to an earth leakage current above 3.5 mA. Do not switch the power on/off more than four times a day.

The electrical connection and protection must be carried out in accordance with local regulations.

- The pump must always be correctly earthed.
- The pump requires no external motor protection. The motor incorporates thermal protection against slow overloading and blocking.

Additional protection

Connecting the pump to an electric installation with an earth leakage circuit breaker (ELCB) is not a requirement. However, if you choose to use this additional protection, the earth leakage circuit breakers must be marked with the following symbols:

Single-phase

TM072868

The earth leakage circuit breakers must trip out when earth fault currents with DC content (pulsating DC) occur.

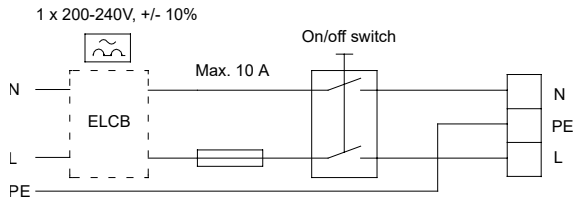

TM020792

Wiring diagram, single-phase

Three-phase

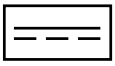

TM072869

The earth leakage circuit breakers must trip out when earth fault currents with DC content (pulsating DC) and smooth DC earth fault currents occur.

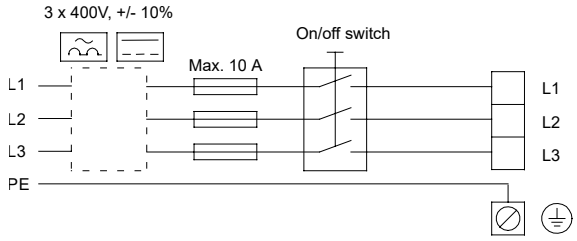

TM009270

Wiring diagram, three-phase, 2.2-7.5 kW

Float switch

It is optional to add a float or level switch to Hydro Solo-E and Hydro Solo-E Optimum systems.

Hydro Solo-E Optimum

For more information on adding the float or level switch to Hydro Solo-E Optimum and to access the wiring diagram, scan the QR code to access the quick guide:

net.grundfos.com/qr/i/99838821

Hydro Solo-E

For more information on adding the float or level switch to Hydro Solo-E and to access the wiring diagram, scan the QR code to access the quick guide:

net.grundfos.com/qr/i/98475844

Reset after water shortage

Automatic reset

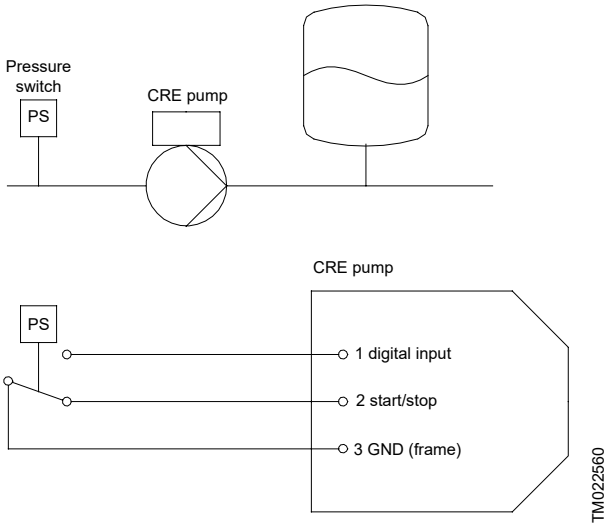

Automatic reset with pressure switch

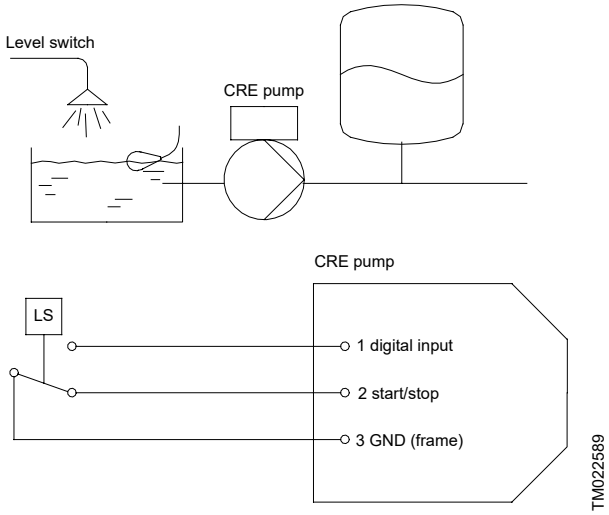

Automatic reset with float/level switch

Manual reset

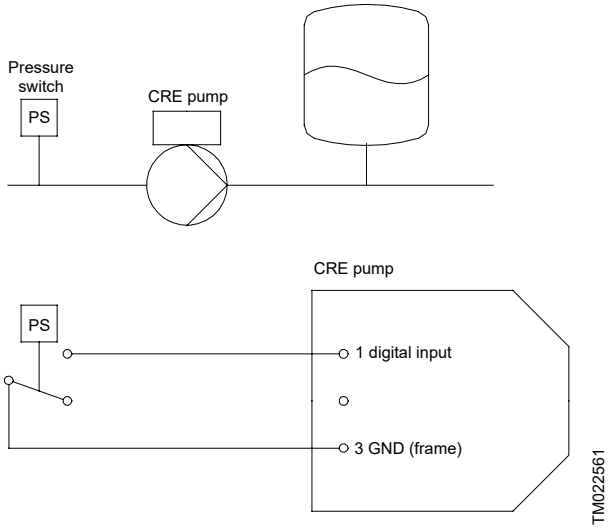

Manual reset with pressure switch

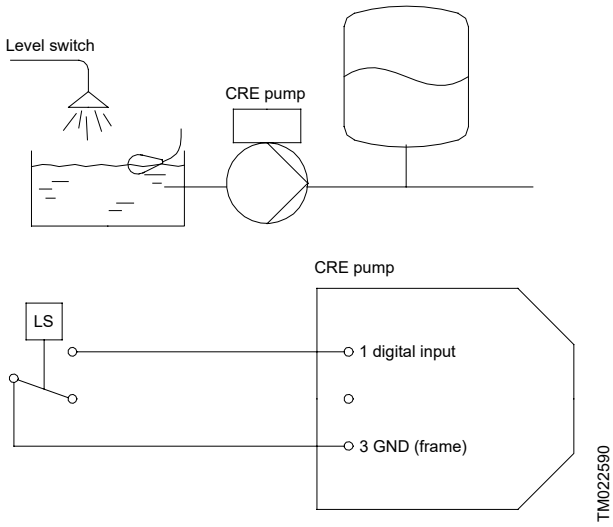

Manual reset with float/level switch

Control of CRE pumps

Communication with CRE pumps

Communication with CRE pumps is possible via:

- A central building management system
- Grundfos GO
- an operating panel.

Central building management system

The operator can communicate with a CRE pump at a distance. Communication can take place via a central building management system allowing the operator to monitor and change control modes and setpoint settings.

The communication interface between the CRE pump and central building management systems varies depending on the pump size.

net.grundfos.com/qr/i/98358864

Grundfos GO support

With the Grundfos GO app, you can monitor the product, change settings, collect data and make reports. A user-friendly interface provides you with all the information and help you need, as well as live pump data monitoring and easy-to-follow tips and guides.

You can use Grundfos GO for the following functions:

- reading operating data
- reading warning and alarm indicators
- setting the control mode and the application (emptying or filling)
- setting the control mode
  and the application (dewatering or filling)
- setting the time (real-time clock)
- setting the user-configurable log
- storing and recalling configuration.

Grundfos GO

The product is designed for wireless radio, Bluetooth communication or infrared communication with Grundfos GO.

Grundfos GO enables you to set functions and gives you access to status overviews, technical product information and current operating parameters.

Use Grundfos GO together with this mobile interface:

- Grundfos MI 301.

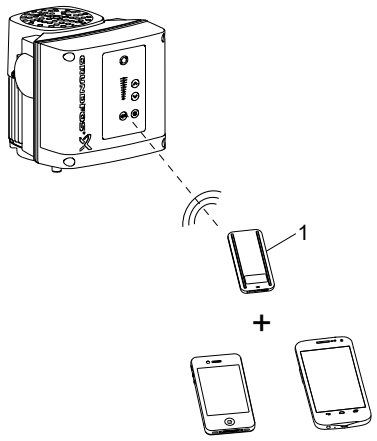

Pos.	Description
1	Grundfos MI 301: Separate module enabling radio or infrared communication. Use the module together with an Android or iOS-based smart device via a Bluetooth connection.

Bluetooth

The product incorporates a Bluetooth (BLE) module for remote control. You can use the module anywhere in the EU without restrictions.

Via the built-in Bluetooth module, the product can communicate with Grundfos GO.

The product contains a Bluetooth (BLE) module. Grundfos will support the product with security updates for at least 2 years from production of the unit.

Bluetooth information

Frequency of operation	2400 - 2483.5 MHz
Modulation type	GFSK
Data rate	2 Mbps
Transmit power	5 dBm EIRP with internal antenna

GLoWpan information

Frequency of operation	2405-2480 MHz
Modulation type	GP O-QPSK
Data rate	1 Mbps
Transmit power	5 dBm EIRP with internal antenna

3. Hydro Solo-E Optimum

TM076324

Hydro Solo-E Optimum

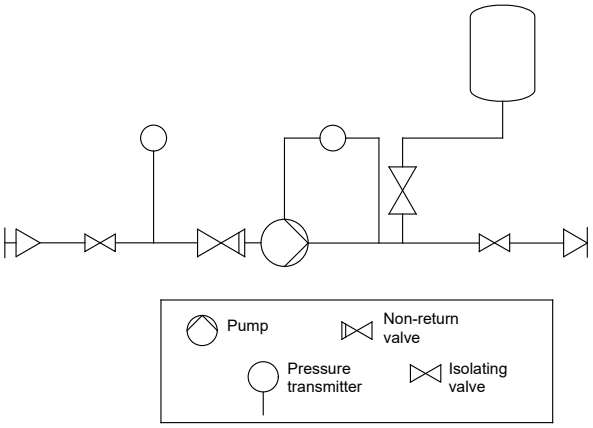

TM076293

Schematic of Hydro Solo-E Optimum

The Grundfos Hydro Solo-E Optimum booster system is a turnkey solution enabling you to keep constant pressure in your system at all times.

Hydro Solo-E Optimum consists of the following:

- inline vertical multistage centrifugal (CRIE) pump with IE5 motor and integrated VFD with display
- isolating valves for easy maintenance of the system
- analog pressure sensor for monitoring of inlet conditions and prevention of dry running of the pump
- inlet and outlet manifold in stainless steel
- analog pressure sensor for monitoring and control of outlet pressure
- main switch
- non-return valve for prevention of backflow when the pump is stopped
- pressurised diaphragm tank to enable the stopping of the pump at low flow to increase system efficiency
- flowjet valve – special ball valve for pressure tank connection to ensure water circulation inside the tank
- stainless-steel, factory-mounted baseplate with vibration dampers
- Bluetooth communication.

Features and benefits of Optimum range

Easy installation

Hydro Solo-E Optimum is fully pre-assembled, enabling a quick and easy installation. The system needs to be connected, primed and then it is ready for operation. Compactness of the system reduces the space needed in installation.

Low energy consumption

The Grundfos E-motor with a built-in frequency converter enables variable speed operation and high efficiency, resulting in extensive energy savings.

Motor protection

The Hydro Solo-E systems require no external motor protection. The motor incorporates thermal protection against slow overloading and blocking.

Preprogrammed functions

- Pressure boosting - Home display.
- Constant-pressure control.
- Low-flow stop activated - setup according to tank size.
- Stop at minimum speed activated (30 sec).
- Dry-running protection activated (0.5 bar - adjustable).
- Flow estimation.
- Anti-cavitation protection (flow limit).
- Alarm/Pump running signal relays.

Grundfos GO

The product is designed for Bluetooth communication with Grundfos GO.

Grundfos GO enables you to set functions and gives you access to status overviews, technical product information and current operating parameters.

Protection features

Dry-running protection

The product incorporates dry-running protection that automatically stops the pump from running without liquid. Dry-running protection means less risk of pump damage and lower maintenance costs.

Anti-cavitation

The pump comes preprogrammed with a flow limit to protect against cavitation.

Safe Torque Off (STO) function

The Safe Torque Off (STO) is a safety function to stop the motor from turning without actively braking it. It follows the definition by EN61800-5-2.

For instructions on how to activate and operate the Safe Torque Off (STO) function, read the following installation and operating instructions.

QR92916582

Safe Torque Off

Installation and operating instructions

http://net.grundfos.com/qr/i/92916582

Operating panel

Hydro Solo-E Optimum

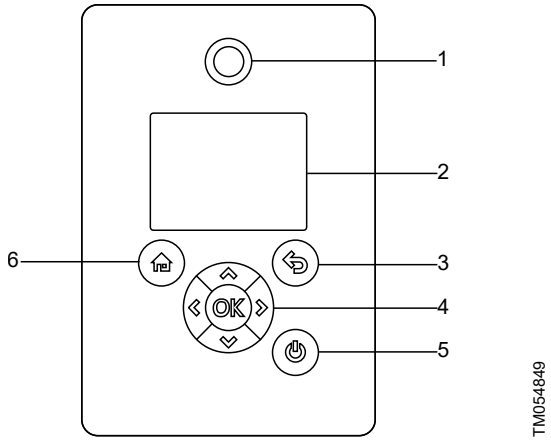

Pos.	Symbol	Description
1		**Grundfos Eye:** The indicator light shows the operating status of the product.
2	-	Graphic colour display.
3		**Back**: Press the button to go one step back.
4		**Left**/**Right**: Press the buttons to navigate between main menus, displays and digits. When you change the menu, the display shows the top display of the new menu.
		Up/**Down**: Press the buttons to navigate between submenus or change the value settings. If you have disabled the possibility to make settings with the **Enable/disable settings** function, you can enable it again temporarily by pressing these buttons simultaneously for at least 5 seconds.
	OK	**OK**: Press the button to do the following: • Save changed values, reset alarms and expand the value field. • Enable radio communication with Grundfos GO and other products of the same type. When you try to establish radio communication between the product and Grundfos GO or another product, the green indicator light in Grundfos Eye flashes. In the controller display, a note states that a wireless device wants to connect to the product. Press **OK** on the product operating panel to allow radio communication with Grundfos GO and other products of the same type.
5		**Start/Stop**: Press the button to make the product ready for operation or to start and stop the product. **Start**: If you press the button when the product is stopped, the product starts if no other functions with higher priority have been enabled. **Stop**: If you press the button when the product is running, the product always stops. When you press the button, the stop icon appears at the bottom of the display.
6		**Home**: Press the button to go to the **Home** menu.

Home display

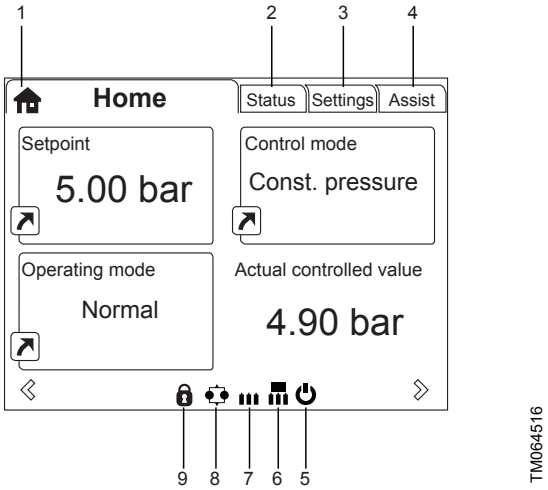

Pos.	Symbol	Description
1		**Home**: This menu shows up to four user-defined parameters. You can access each parameter directly from this menu.
2	-	**Status**: This menu shows the status of the product and system, warnings and alarms.
3	-	**Settings**: This menu gives access to all setting parameters. The menu also allows you to make detailed settings.
4	-	**Assist**: This menu enables assisted setup, provides a short description of the control modes and offers fault-finding advice.
5		**Start/Stop**: The icon indicates that the product was stopped with the **Start/Stop** button.
6		**Master:** The icon indicates that the product is functioning as the master in a system with products of the same type and size.
7		**Slave:** The icon indicates that the product is functioning as a slave in a system with products of the same type and size.
8		**Multioperation:** The icon indicates that the product is operating in a system with products of the same type and size.
9		**Lock:** The icon indicates that the possibility to make settings has been disabled for protective reasons.

Performance curves

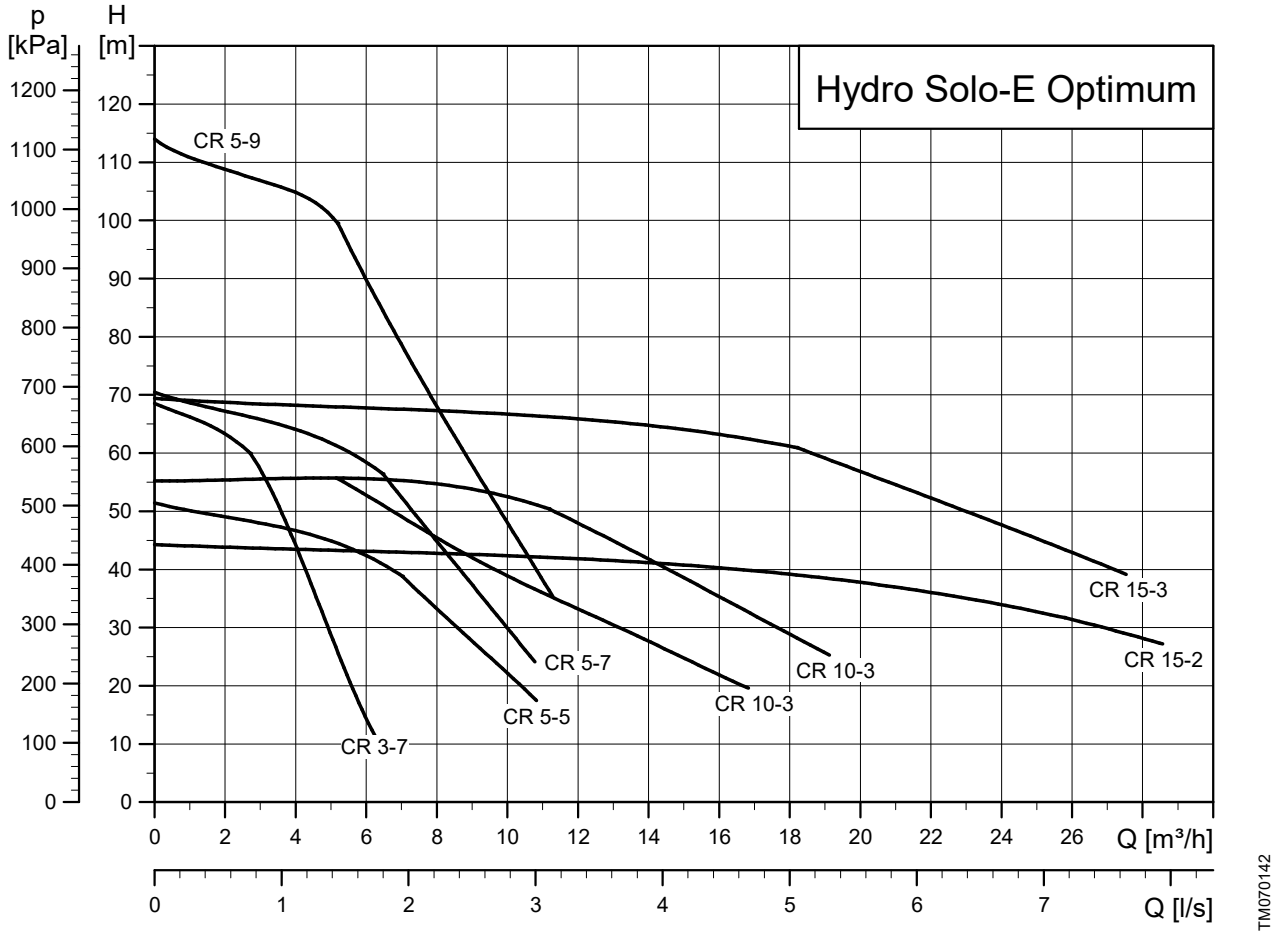

Hydro Solo-E Optimum performance range

Technical data

Dimensions and weights

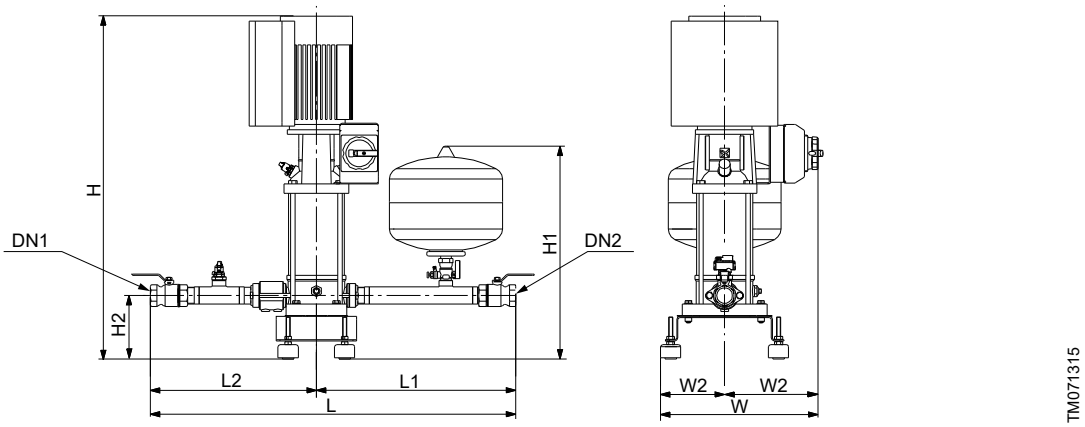

Dimensions

Pump type	H	H1	H2	W	W1	W2	L	L1	L2
CRIE 3-7	611	465	112	403	244	159	912	568	344
CRIE 5-5	620	465	112	403	244	159	912	568	344
CRIE 5-7	710	465	112	403	244	159	912	568	344
CRIE 5-9	804	465	112	403	244	159	912	568	344
CRIE 10-3	739	465	142	479	259	220	969	599	370
CRIE 15-2	816	465	152	467	259	208	1188	681	507
CRIE 15-3	861	465	152	467	259	208	1188	681	507

Weights

Pump type	Net Weight [kg]	Gross Weight [kg]
CRIE 3-7	41	50
CRIE 5-5	44	52
CRIE 5-7	48	57
CRIE 5-9	48	57
CRIE 10-3	70	84
CRIE 15-2	79	103
CRIE 15-3	79	103

Electrical data

Pump type	Motor [kW]	Full-load current [A]	Supply voltage [V]	Tank volume [l]	Connection inlet/outlet
CRIE 3-7	0.75	4.70-3.90	1 × 200-240	18	Rp 1" 1/4
CRIE 5-5	1.1	6.70-5.60	1 × 200-240	18	Rp 1" 1/4
CRIE 5-7	1.5	9.10-7.60	1 × 200-240	18	Rp 1" 1/4
CRIE 5-9	2.2	4.15-3.40	3 × 380-500	18	Rp 1" 1/4
CRIE 10-3	1.5	9.10-7.60	1 × 200-240	18	Rp 1" 1/2
CRIE 10-3	2.2	4.15-3.40	3 × 380-500	18	Rp 1" 1/2
CRIE 15-2	3.0	5.80-4.80	3 × 380-500	18	Rp 2"
CRIE 15-3	4.0	7.60-6.20	3 × 380-500	18	Rp 2"

Operating temperature

Liquid temperature		0-50 °C (32-122 °F)
Ambient temperature	CRE 0.37 - 11 kW	0-50 °C

Minimum inlet pressure

The minimum inlet pressure H in metres head required to avoid cavitation in the pump is calculated as follows:

H	**$= P_b \times 10.2 - NPSH - H_f - H_v - H_s$**
P_b	= Barometric pressure in bar. Barometric pressure can be set to 1, if required.
NPSH	= Net Positive Suction Head in metres head. NPSH can be read from the NPSH curve at the maximum capacity at which the pump will run.
H_f	= Friction loss in inlet pipe in metres head.
H_v	= Vapour pressure in metres head.
H_s	= Safety margin of minimum 0.5 metres head.

Maximum inlet and system pressures

Hydro Solo-E Optimum	Maximum inlet pressure [bar]	System pressure [bar]
CRIE 3-7	6	10
CRIE 5-5	6	10
CRIE 5-9	6	16
CRIE 10-3	6	10
CRIE 15-2	6	10
CRIE 15-3	6	10

Construction of Hydro Solo-E Optimum

System components

The inlet side is fitted with a stainless-steel inlet pipe (EN/DIN 1.4401 or EN/DIN 1.4571) and a non-return valve. The inlet pipe is fitted with a isolating valve and a inlet pressure sensor.

The outlet side of the pump is fitted with a isolating valve, Flowjet valve and pressure tank.

The pump is fitted with and off/on switch for supply voltage, a outlet pressure sensor and a display.

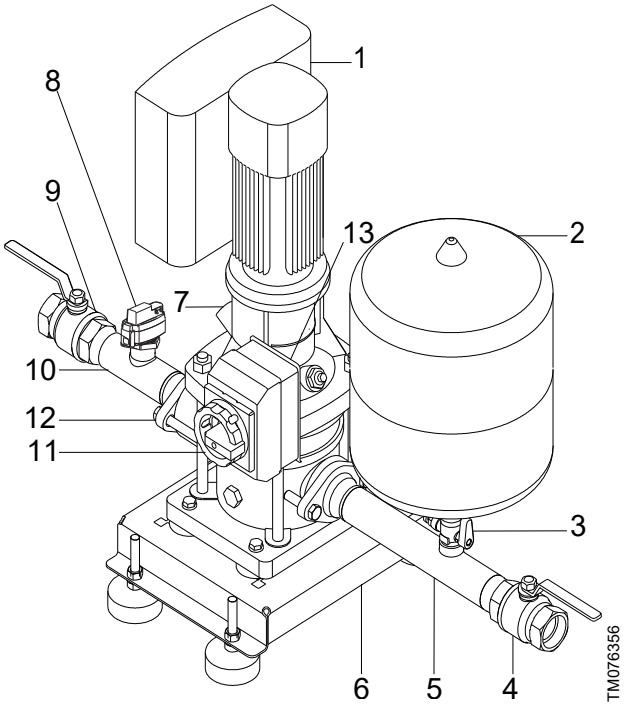

Pos.	Description	Quantity
1	CRIE pump with a display	1
2	Pressure tank	1
3	Flowjet valve for pressure tank	1
4	Isolating valve	1
5	Outlet pipe, stainless steel	1
6	Base plate with vibration dampers	1
7	Outlet pressure sensor	1
8	Inlet pressure sensor	1
9	Isolating valve	1
10	Inlet pipe, stainless steel	1
11	On/off switch	1
12	Non-return valve	1
13	Nameplate	1

4. Hydro Solo-E

TM076249

Hydro Solo-E

The Grundfos Hydro Solo-E booster system is a turnkey solution enabling you to keep a constant pressure in your system at all times. Hydro Solo-E consists of a Grundfos CRE pump fitted with isolating valve, non-return valve, outlet pipe, pressure transmitter, pressure gauge and pressure tank. Hydro Solo-E is ready for operation on delivery.

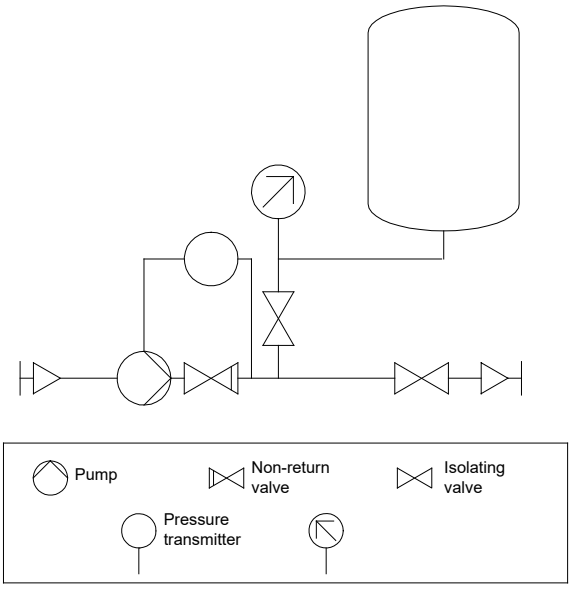

TM008427

Schematic of Hydro Solo-E

Features and benefits

- Easy installation
- constant pressure
- speed-controlled pump
- low energy consumption
- no need for motor protection
- compact design.

Easy installation

Hydro Solo-E Optimum is fully pre-assembled, enabling a quick and easy installation. The system needs to be connected, primed and then it is ready for operation. Compactness of the system reduces the space needed in installation.

Motor protection

The Hydro Solo-E systems require no external motor protection. The motor incorporates thermal protection against slow overloading and blocking.

Grundfos GO

The product is designed for Bluetooth communication with Grundfos GO.

Grundfos GO enables you to set functions and gives you access to status overviews, technical product information and current operating parameters.

Protection features

Dry-running protection

Dry-running protection is available as an accessory for Hydro Solo-E variants. This protection feature automatically stops the pump from running without liquid. Dry-running protection means less risk of pump damage and lower maintenance costs.

Anti-cavitation

The pump comes preprogrammed with a flow limit to protect against cavitation.

Safe Torque Off (STO) function

The Safe Torque Off (STO) is a safety function to stop the motor from turning without actively braking it. It follows the definition by EN61800-5-2.

For instructions on how to activate and operate the Safe Torque Off (STO) function, read the following installation and operating instructions.

QR92916582

Safe Torque Off

Installation and operating instructions

http://net.grundfos.com/qr/i/92916582

Operating panel

Hydro Solo-E

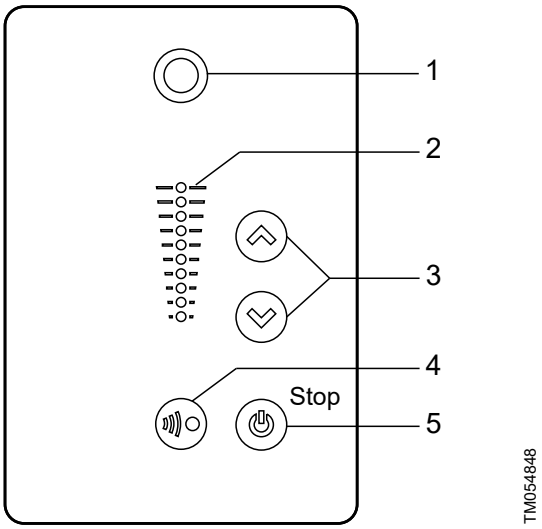

Pos.	Symbol	Description
1		**Grundfos Eye:** The indicator light shows the operating status of the product.
2	-	Light fields for setpoint indication.
3		**Up/Down**: The buttons change the setpoint.
4		**Radio communication**: The button enables radio or Bluetooth communication with Grundfos GO and other products of the same type.
5		**Start/Stop**: Press the button to make the product ready for operation or to start and stop the product. **Start**: If you press the button when the product is stopped, the product starts if no other functions with higher priority have been enabled. **Stop**: If you press the button when the product is running, the product always stops. When you press the button, the stop icon appears at the bottom of the display.

Technical data

Liquid temperatures

Liquid temperature: 0-50 °C (32-122 °F)

Ambient temperature

Ambient temperature during storage and transportation

Description	Temperature
Minimum	-30 °C (-22 °F)
Maximum	60 °C (140 °F)

Ambient temperature during operation

Model J

Description	3 × 200−240 V	3 × 380−500 V [2]
Minimum	0 °C (32 °F)	0 °C (32 °F)
Maximum	40 °C (104 °F)	50 °C (122 °F)

2) Continuous operation at higher temperatures reduces the expected product lifetime. If the motor operates at ambient temperatures between 50 and 60 °C, select an oversized motor. Contact Grundfos for further information.

Model K

Description	3 × 200-240 V	3 × 380-480 V 3 × 440-480 V
Minimum	0 °C (32 °F)	0 °C (32 °F)
Maximum	40 °C (104 °F)	50 °C (122 °F)

Operating temperature

Liquid temperature		0-50 °C (32-122 °F)
Ambient temperature	CRE 0.37 - 11 kW	0-50 °C

Minimum inlet pressure

The minimum inlet pressure H in metres head required to avoid cavitation in the pump is calculated as follows:

H	**= P_b × 10.2 - NPSH - H_f - H_v - H_s**
P_b	= Barometric pressure in bar. Barometric pressure can be set to 1, if required.
NPSH	= Net Positive Suction Head in metres head. NPSH can be read from the NPSH curve at the maximum capacity at which the pump will run.
H_f	= Friction loss in inlet pipe in metres head.
H_v	= Vapour pressure in metres head.
H_s	= Safety margin of minimum 0.5 metres head.

Maximum inlet and system pressures

International range

Pump type	Maximum pressure [bar]
CRE 1-4, 1-9	10
CRE 1-13	16
CRE 3-4, 3-5, 3-8	10
CRE 3-11, 3-15	16
CRE 5-2, 5,4, 5-5, 5-9	10
CRE 5-12	16
CRE 10-1, 10-2, 10-3, 10-5	10
CRE 10-6	16
CRE 15-2, 15-3, 15-4	10
CRE 15-5	16
CRE 20-2, 20-3, 20-4	10
CRE 32-2-2	10
CRE 45-1	10

Southern European range

Pump type	System pressure [bar]
CRE 1-4, 1-6, 1-9, 1-13, 1-17	16
CRE 3-4, 3-5, 3-8, 3-11, 1-15	16
CRE 5-2, 5-4, 5-5, 5-9	10
CRE 5-12	16
CRE 10-1, 10-2, 10-3, 10-5	10
CRE 10-6	10
CRE 15-2	10
CRE 15-3, 15-4	10
CRE 20-2, 20-3	10
CRE 32-2-2	10
CRE 45-1	10

Construction of Hydro Solo-E

System components

The outlet side of the pump is fitted with a non-return valve, a stainless-steel outlet pipe (EN/DIN 1.4401 or EN/DIN 1.4571) and an isolating valve. The outlet pipe is fitted with a pressure transmitter and an isolating valve for the pressure gauge and the pressure tank. The pump is fitted with an on/off switch for the supply voltage.

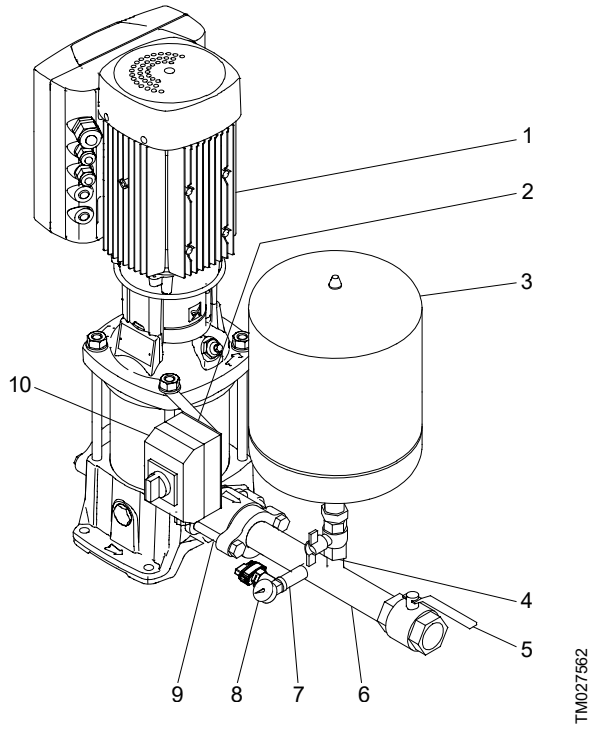

Hydro Solo-E

Pos.	Description	Quantity
1	CRE pump	1
2	Nameplate	1
3	Pressure tank	1
4	Isolating valve for pressure tank and pressure gauge	1
5	Isolating valve	1
6	Outlet pipe, stainless steel	1
7	Pressure transmitter	1
8	Pressure gauge	1
9	Non-return valve	1
10	On/off switch	1

Data sheets

Hydro Solo-E with CRE 1

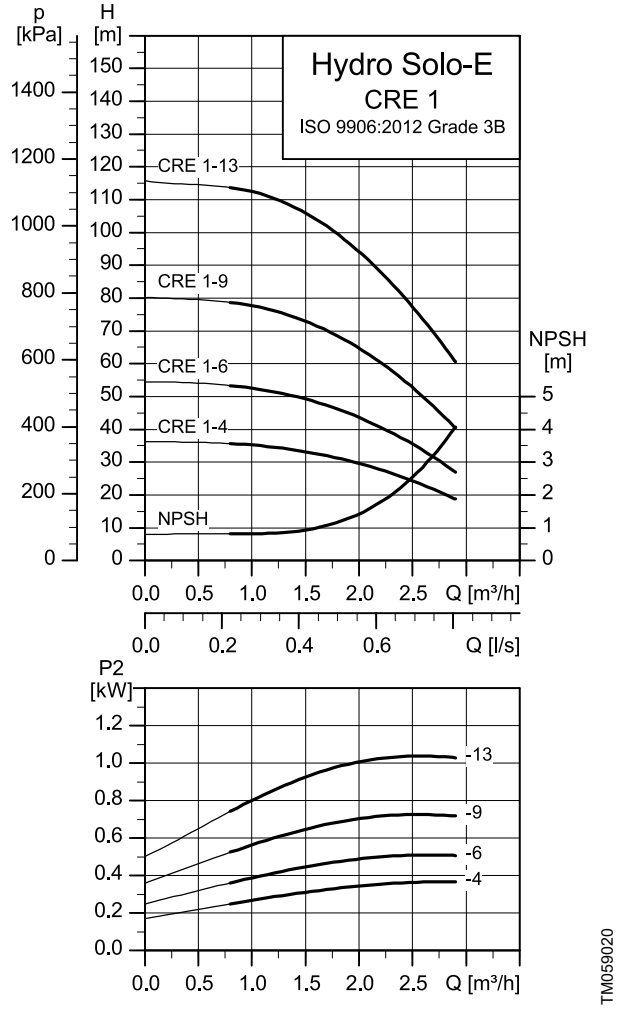

Electrical data

International range

Pump type	Motor [kW]	Full-load current [A]	Supply voltage [V]
CRE 1-4	0.37	2.40 - 2.10	1 × 200-240 V
CRE 1-6	0.55	3.45 - 2.90	1 × 200-240 V
CRE 1-9	0.75	4.70 - 3.90	1 × 200-240 V
CRE 1-13	1.10	6.70 - 5.60	1 × 200-240 V

Southern European range

Pump type	Motor [kW]	Full-load current [A]	Supply voltage [V]
CRE 1-6	0.55	3.45 - 2.90	1 × 200-240 V
CRE 1-9	0.75	4.70 - 3.90	1 × 200-240 V
CRE 1-13	1.10	6.70 - 5.60	1 × 200-240 V

Dimensions and weights

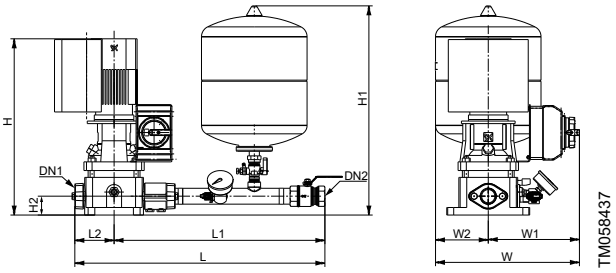

International range

Pump type	Tank volume [l]	Connection inlet/outlet	Net weight [kg]	Gross weight [kg]	H [mm]	H1 [mm]	H2 [mm]	W [mm]	W1 [mm]	W2 [mm]	L [mm]	L1 [mm]	L2 [mm]
CRE 1-4	18	Rp 1" 1/4	45	48	486	465	50	384	244	140	749	591	102
CRE 1-6	18	Rp 1" 1/4	46	49	522	465	50	384	244	140	749	591	102
CRE 1-9	18	Rp 1" 1/4	48	51	582	465	50	384	244	140	749	591	102
CRE 1-13	12	Rp 1" 1/4	50	53	654	466	50	38 9	244	115	749	591	102

Southern European range

Pump type	Tank volume [l]	Connection inlet/outlet	Net weight [kg]	Gross weight [kg]	H [mm]	H1 [mm]	H2 [mm]	W [mm]	W1 [mm]	W2 [mm]	L [mm]	L1 [mm]	L2 [mm]
CRE 1-6	8	Rp 1" 1/4	57	77	522	649	50	377	237	140	713	555	102
CRE 1-9	8	Rp 1" 1/4	59	79	582	649	50	377	237	140	713	555	102
CRE 1-13	8	Rp 1" 1/4	62	82	654	649	50	377	237	140	713	555	102

Hydro Solo-E with CRE 3

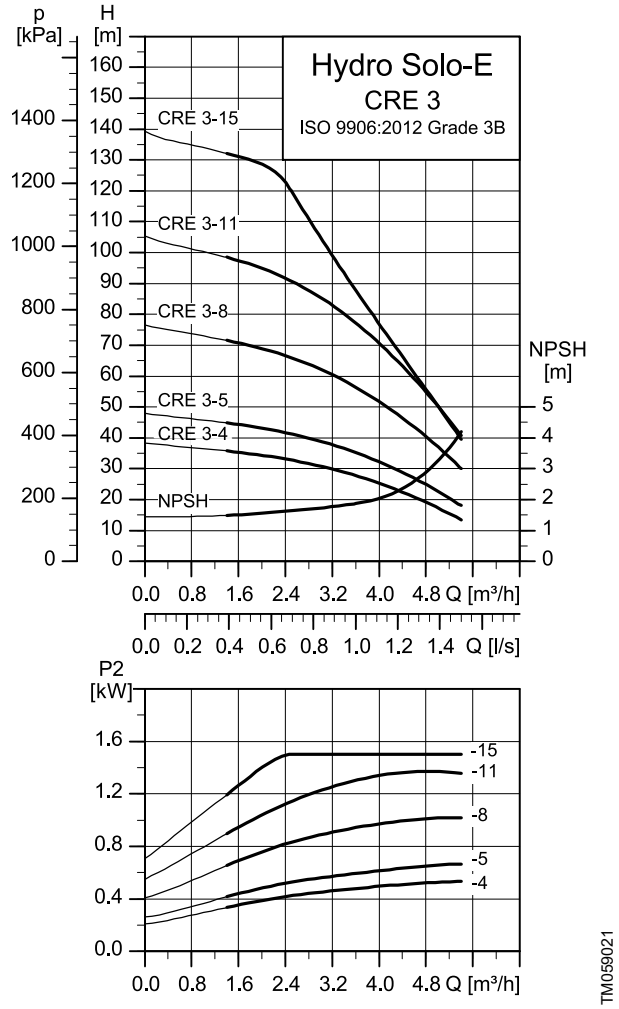

Electrical data

International range

Pump type	Motor [kW]	Full-load current [A]	Supply voltage [V]
CRE 3-4	0.55	3.45 - 2.90	1 × 200-240 V
CRE 3-5	0.75	4.70 - 3.90	1 × 200-240 V
CRE 3-8	1.10	6.70 - 5.60	1 × 200-240 V
CRE 3-11	1.50	9.10 - 7.60	1 × 200-240 V
CRE 3-15	2.20	4.15 - 3.4 0	3 × 380-500 V
	1.5	2.90 - 2.40	3 × 380-500 V

Southern European range

Pump type	Motor [kW]	Full-load current [A]	Supply voltage [V]
CRE 3-8	1.10	6.70 - 5.60	1 × 200-240 V
CRE 3-11	1.50	9.10 - 7.60	1 × 200-240 V
CRE 3-15	1.50	9.10 - 7.60	1 × 200-240 V

Dimensions and weights

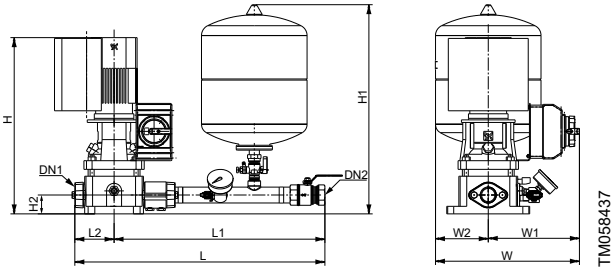

International range

Pump type	Tank volume [l]	Connection inlet/outlet	Net weight [kg]	Gross weight [kg]	H [mm]	H1 [mm]	H2 [mm]	W [mm]	W1 [mm]	W2 [mm]	L [mm]	L1 [mm]	L2 [mm]
CRE 3-4	18	Rp 1" 1/4	45	48	486	465	50	420	244	140	749	591	102
CRE 3-5	18	Rp 1" 1/4	46	49	510	465	50	420	244	140	749	591	102
CRE 3-8	18	Rp 1" 1/4	48	51	606	465	50	384	244	140	749	591	104
CRE 3-11	12	Rp 1" 1/4	52	55	654	466	50	384	244	115	749	591	104
CRE 3-15	12	Rp 1" 1/4	57	63	813	466	50	420	244	115	749	591	102

Southern European range

Pump type	Tank volume [l]	Connection inlet/outlet	Net weight [kg]	Gross weight [kg]	H [mm]	H1 [mm]	H2 [mm]	W [mm]	W1 [mm]	W2 [mm]	L [mm]	L1 [mm]	L2 [mm]
CRE 3-8	25	Rp 1" 1/4	35	53	564	649	50	377	237	140	713	555	102
CRE 3-11	25	Rp 1" 1/4	39	57	654	649	50	377	237	140	713	555	102
CRE 3-15	25	Rp 1" 1/4	41	59	726	649	50	377	237	140	713	555	102

Hydro Solo-E with CRE 5

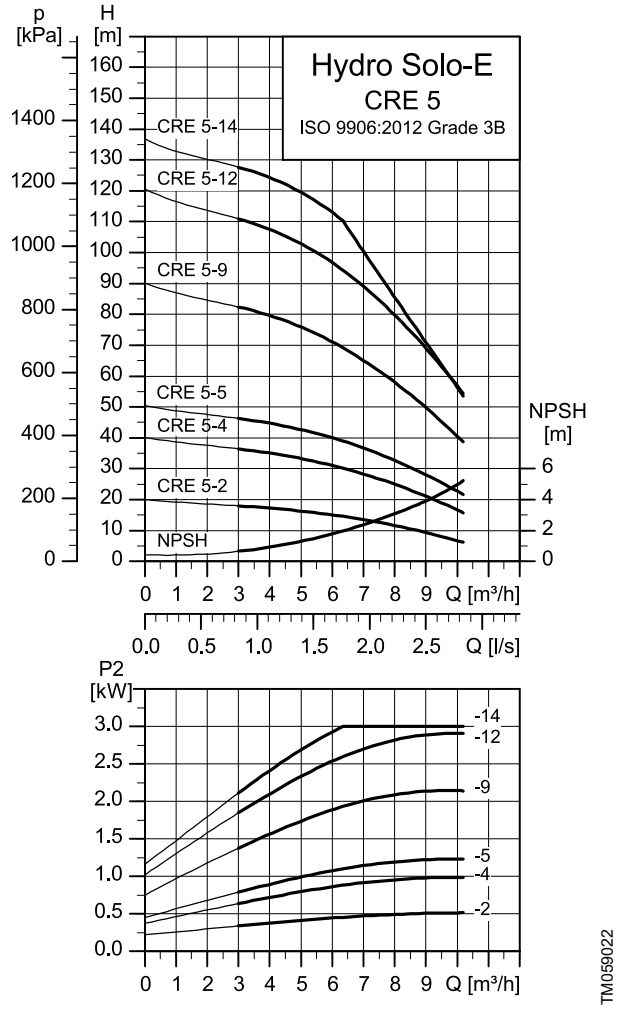

Electrical data

International range

Pump type	Motor [kW]	Full-load current [A]	Supply voltage [V]
CRE 5-2	0.55	3.45 - 2.90	1 × 200-240 V
CRE 5-4	1.1	6.70 - 5.60	1 × 200-240 V
CRE 5-5	1.50	9.10 - 7.60	1 × 200-240 V
CRE 5-9	2.20	4.15 - 3.40	3 × 380-500 V
CRE 5-12	3.00	5.80 - 4.80	3 × 380-500 V
CRE 5-14	3.00	5.80 - 4.80	3 × 380-500 V

Southern European range

Pump type	Motor [kW]	Full-load current [A]	Supply voltage [V]
CRE 5-5	1.50	9.10 - 7.60	1 × 200-240 V
CRE 5-9	2.20	4.15 - 3.40	3 × 380-500 V
CRE 5-12	3.00	6.20 - 5.00	3 × 380-500 V
CRE 5-14	3.00	5.80 - 4.80	3 × 380-500 V

Dimensions and weights

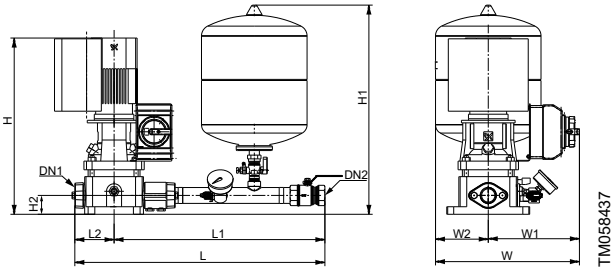

International range

Pump type	Tank volume [l]	Connection inlet/outlet	Net weight [kg]	Gross weight [kg]	H [mm]	H1 [mm]	H2 [mm]	W [mm]	W1 [mm]	W2 [mm]	L [mm]	L1 [mm]	L2 [mm]
CRE 5-2	18	Rp 1" 1/4	45	4 8	468	465	50	384	244	140	749	591	102
CRE 5-4	18	Rp 1" 1/4	50	52	528	498	50	384	244	140	749	591	102
CRE 5-5	18	Rp 1" 1/4	5 1	5 4	591	465	50	384	244	140	749	591	102
CRE 5-9	18	Rp 1" 1/4	56	9	738	465	50	384	244	140	749	591	104
CRE 5-12	12	Rp 1" 1/4	72	93	884	390	50	3 84	2 44	140	673	569	10 4
CRE 5-14	12	Rp 1" 1/4	60	80	938	466	50	38 9	244	115	792	591	102

Southern European range

Pump type	Tank volume [l]	Connection inlet/outlet	Net weight [kg]	Gross weight [kg]	H [mm]	H1 [mm]	H2 [mm]	W [mm]	W1 [mm]	W2 [mm]	L [mm]	L1 [mm]	L2 [mm]
CRE 5-5	25	Rp 1" 1/4	38	56	591	649	50	377	237	140	713	555	102
CRE 5-9	25	Rp 1" 1/4	43	61	739	649	50	377	237	140	713	555	102
CRE 5-12	25	Rp 1" 1/4	54	72	884	649	50	377	237	140	756	555	102
CRE 5-14	25	Rp 1" 1/4	56	74	938	649	50	3 77	2 37	140	7 56	5 55	102

Hydro Solo-E with CRE 10

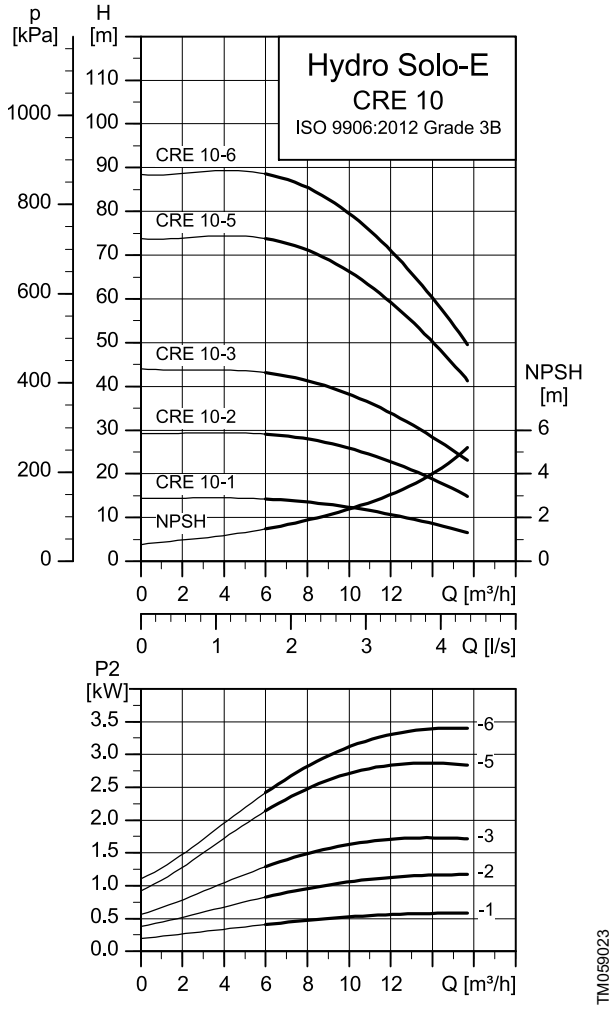

Electrical data

International range

Pump type	Motor [kW]	Full-load current [A]	Supply voltage [V]
CRE 10-1	0.75	4.70 - 3.90	1 × 200-240 V
CRE 10-2	1.50	9.10 - 7.60	1 × 200-240 V
CRE 10-3	2.20	4.15 - 3.40	3 × 380-500 V
CRE 10-5	3.00	5.80 - 4.80	3 × 380-500 V
CRE 10-6	4.00	7.60 - 6.20	3 × 380-500 V

Southern European range

Pump type	Motor [kW]	Full-load current [A]	Supply voltage [V]
CRE 10-3	2.20	4.15 - 3.40	3 × 380-500 V
CRE 10-5	3.00	5.80 - 4.80	3 × 380-500 V
CRE 10-6	4.00	7.60 - 6.20	3 × 380-500 V

Dimensions and weights

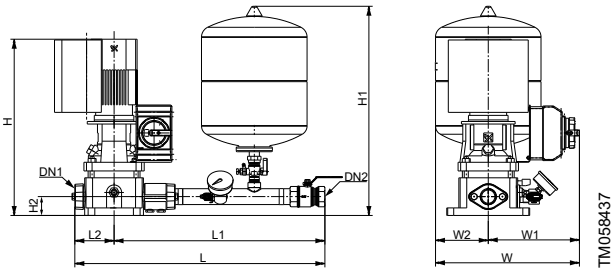

International range

Pump type	Tank volume [l]	Connection inlet/outlet	Net weight [kg]	Gross weight [kg]	H [mm]	H1 [mm]	H2 [mm]	W [mm]	W1 [mm]	W2 [mm]	L [mm]	L1 [mm]	L2 [mm]
CRE 10-1	18	Rp 1" 1/2	68	72	561	495	80	399	259	140	785	627	127
CRE 10-2	18	Rp 1" 1/2	71	75	561	495	80	399	259	140	785	627	127
CRE 10-3	18	Rp 1" 1/2	76	80	667	495	80	399	259	140	785	627	127
CRE 10-5	33	Rp 1" 1/2	85	107	792	578	80	456	259	177	828	627	127
CRE 10-6	12	Rp 1" 1/2	90	112	822	496	80	404	259	115	828	627	127

Southern European range

Pump type	Tank volume [l]	Connection inlet/outlet	Net weight [kg]	Gross weight [kg]	H [mm]	H1 [mm]	H2 [mm]	W [mm]	W1 [mm]	W2 [mm]	L [mm]	L1 [mm]	L2 [mm]
CRE 10-3	25	Rp 1" 1/2	55	75	667	682	80	392	252	140	752	594	127
CRE 10-5	25	Rp 1" 1/2	66	86	792	682	80	397	252	145	795	594	127
CRE 10-6	25	Rp 1" 1/2	70	90	822	682	80	397	252	145	795	594	127

Hydro Solo-E with CRE 15

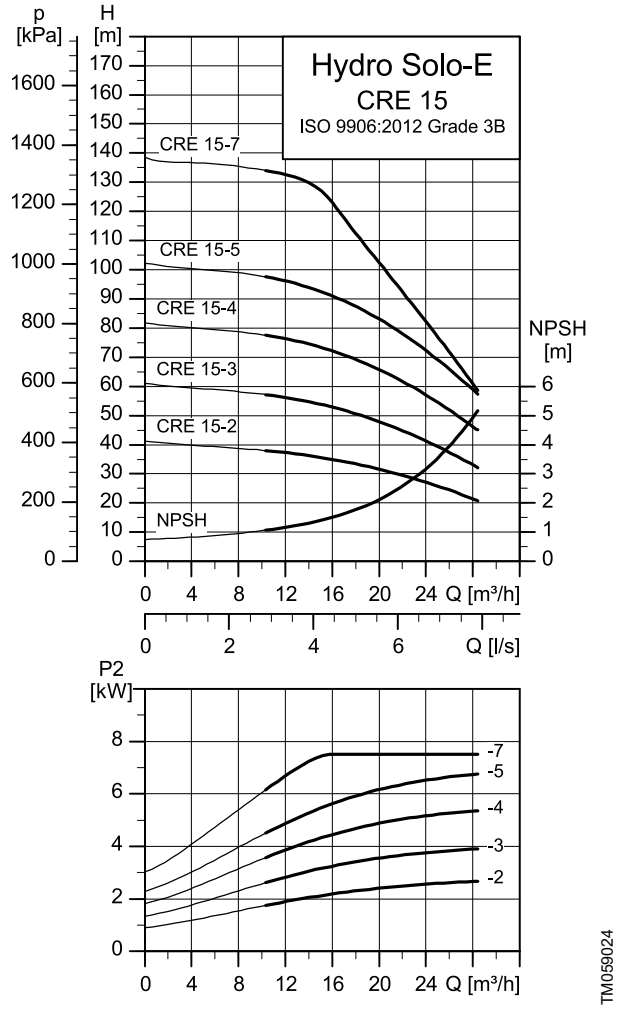

Electrical data

International range

Pump type	Motor [kW]	Full-load current [A]	Supply voltage [V]
CRE 15-2	3.00	6.20 - 5.00	3 × 380-500 V
CRE 15-3	4.00	8.10 - 6.60	3 × 380-500 V
CRE 15-4	5.5	10.3 - 8.2	3 × 380-500 V
CRE 15-5	7.50	14.10 - 11.20	3 × 380-500 V
CRE 15-7	7.50	14.10 - 11.20	3 × 380-500 V

Southern European range

Pump type	Motor [kW]	Full-load current [A]	Supply voltage [V]
CRE 15-2	3.00	5.80 - 4.80	3 × 380-500 V
CRE 15-3	4.00	7.60 - 6.20	3 × 380-500 V
CRE 15-5	7.50	14.10 - 11.20	3 × 380-500 V
CRE 15-7	7.50	14.10 - 11.20	3 × 380-500 V

Dimensions and weights

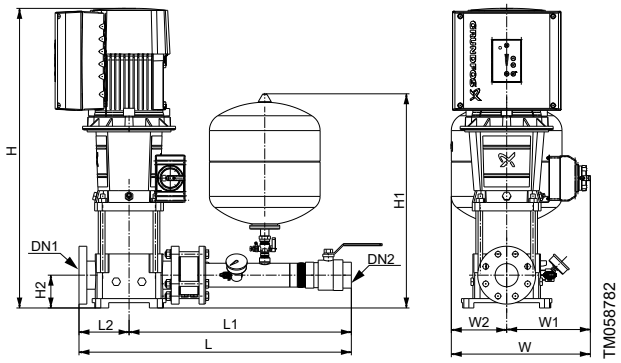

International range

Pump type	Tank volume [l]	Connection Inlet	Connection Outlet	Net weight [kg]	Gross weight [kg]	H [mm]	H1 [mm]	H2 [mm]	W [mm]	W1 [mm]	W2 [mm]	L [mm]	L1 [mm]	L2 [mm]
CRE 15-2	18	DN 50	Rp 2"	86	89	754	505	90	404	259	140	882	681	150
CRE 15-3	18	DN 50	Rp 2"	98	101	799	505	90	404	259	140	882	681	150
CRE 15-4	33	DN 50	Rp 2"	114	143	906	790	90	436	259	177	880	681	150
CRE 15-5	12	DN 50	Rp 2"	111	135	976	506	90	432	259	115	918	681	150
CRE 15-7	12	DN 50	Rp 2"	115	139	1066	506	90	432	259	115	918	681	150

Southern European range

Pump type	Tank volume [l]	Connection Inlet	Connection Outlet	Net weight [kg]	Gross weight [kg]	H [mm]	H1 [mm]	H2 [mm]	W [mm]	W1 [mm]	W2 [mm]	L [mm]	L1 [mm]	L2 [mm]
CRE 15-2	25	DN 50	Rp 2"	72	92	754	698	90	397	252	145	866	665	150
CRE 15-3	25	DN 50	Rp 2"	76	96	799	698	90	397	252	145	866	665	150
CRE 15-5	25	DN 50	Rp 2"	109	129	976	698	90	427	252	175	902	665	150
CRE 15-7	25	DN 50	Rp 2"	112	132	1066	698	90	427	252	175	902	665	150

Hydro Solo-E with CRE 20

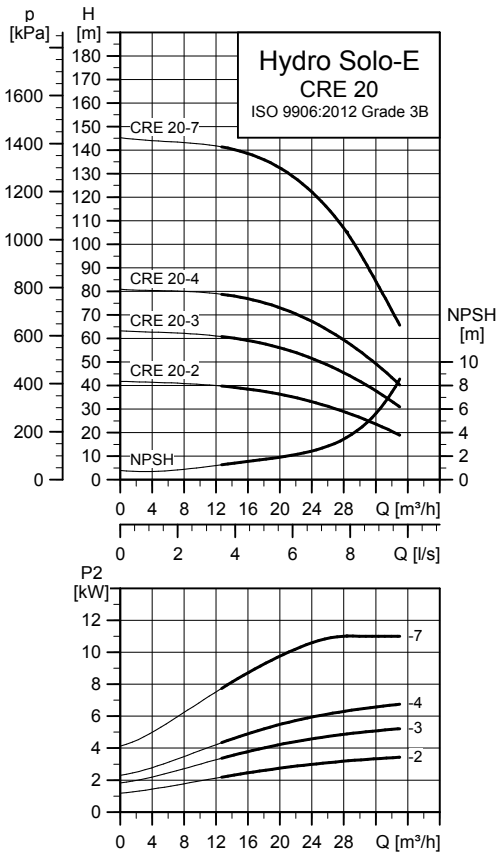

TM059025

Electrical data

International range

Pump type	Motor [kW]	Full-load current [A]	Supply voltage [V]
CRE 20-2	4.00	7.60 - 6.20	3 × 380-500 V
CRE 20-3	5.50	10.30 - 8.20	3 × 380-500 V
CRE 20-4	7.50	14.10 - 11.20	3 × 380-500 V
CRE 20-7	11.00	20.30 - 16.00	3 × 380-500 V

Southern European range

Pump type	Motor [kW]	Full-load current [A]	Supply voltage [V]
CRE 20-2	4.00	7.60 - 6.20	3 × 380-500 V
CRE 20-3	5.50	10.30 - 8.20	3 × 380-500 V
CRE 20-4	7.50	14.10 - 11.20	3 × 380-500 V
CRE 20-7	11.00	20.30 - 16.00	3 × 380-500 V

Dimensions and weights

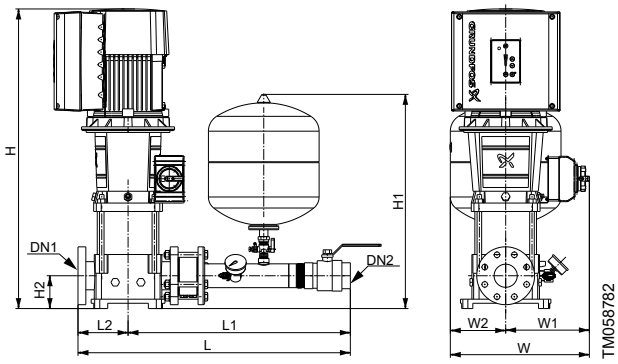

TM058782

International range

Pump type	Tank volume [l]	Connection		Net weight [kg]	Gross weight [kg]	H [mm]	H1 [mm]	H2 [mm]	W [mm]	W1 [mm]	W2 [mm]	L [mm]	L1 [mm]	L2 [mm]
		Inlet	Outlet											
CRE 20-2	33	DN 50	Rp 2"	89	118	754	588	90	436	259	177	882	681	150
CRE 20-3	33	DN 50	Rp 2"	111	140	862	588	90	436	259	177	869	681	150
CRE 20-4	33	DN 50	Rp 2"	110	151	931	588	90	436	259	177	918	681	150
CRE 20-7	12	DN 50	Rp 2"	151	182	1160	506	90	436	257	15	989	681	150

Southern European range

Pump type	Tank volume [l]	Connection		Net weight [kg]	Gross weight [kg]	H [mm]	H1 [mm]	H2 [mm]	W [mm]	W1 [mm]	W2 [mm]	L [mm]	L1 [mm]	L2 [mm]
		Inlet	Outlet											
CRE 20-2	25	DN 50	Rp 2"	75	95	754	698	90	397	252	145	866	665	150
CRE 20-3	25	DN 50	Rp 2"	97	117	862	698	90	402	252	150	866	665	150
CRE 20-4	25	DN 50	Rp 2"	108	128	931	698	90	427	252	175	902	665	150
CRE 20-7	25	DN 50	Rp 2"	135	155	1160	698	90	427	252	175	902	665	150

Hydro Solo-E with CRE 32

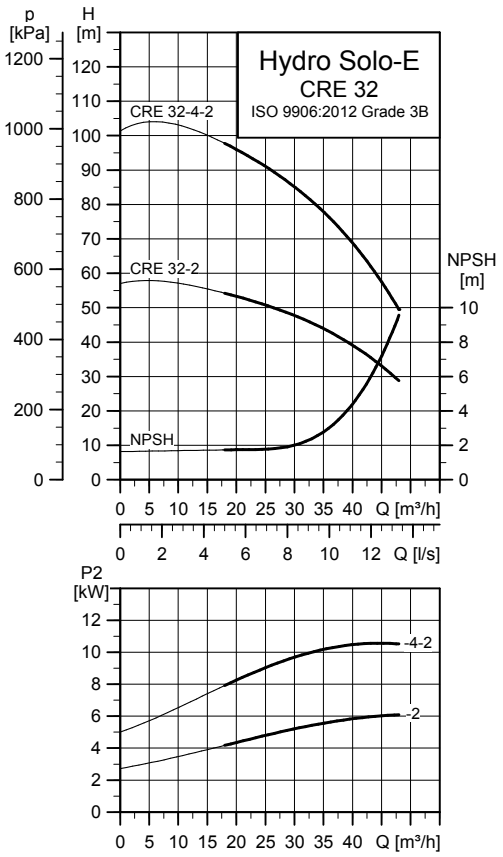

TM059026

Electrical data

International range

Pump type	Motor [kW]	Full-load current [A]	Supply voltage [V]
CRE 32-2	7.50	14.10 - 11.20	3 × 380-500 V
CRE 32- 4- 2	11.0	20.30 - 16.00	3 × 380-500 V

Southern European range

Pump type	Motor [kW]	Full-load current [A]	Supply voltage [V]
CRE 32-2	7.50	14.10 - 11.20	3 × 380-500 V
CRE 32- 4- 2	11.0	20.30 - 16.00	3 × 380-500 V

Dimensions and weights

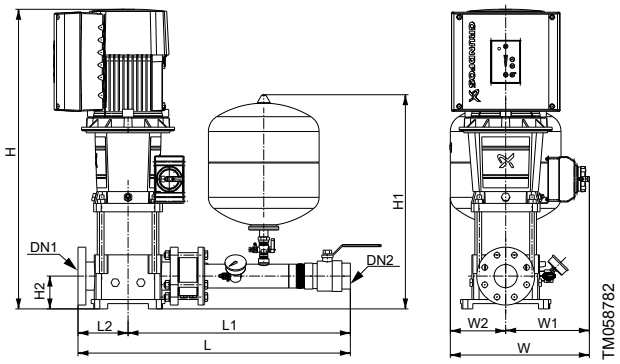

International range

Pump type	Tank volume [l]	Connection		Net weight [kg]	Gross weight [kg]	H [mm]	H1 [mm]	H2 [mm]	W [mm]	W1 [mm]	W2 [mm]	L [mm]	L1 [mm]	L2 [mm]
		Inlet	Outlet											
CRE 32-2	33	DN 65	RP 2 1/2"	116	157	960	603	105	449	272	177	932	695	160
CRE 32-4-2	12	DN65	RP 2 1/2"	148	188	1231	453	105	445	270	140	1003	695	160

Southern European range

Pump type	Tank volume [l]	Connection		Net weight [kg]	Gross weight [kg]	H [mm]	H1 [mm]	H2 [mm]	W [mm]	W1 [mm]	W2 [mm]	L [mm]	L1 [mm]	L2 [mm]
		Inlet	Outlet											
CRE 32-2	25	DN 65	RP 2 1/2"	115	135	964	722	105	438	263	175	921	684	160
CRE 32-4-2	25	DN65	RP 2 1/2"	148	168	1231	722	105	438	263	175	921	684	160

Hydro Solo-E with CRE 45

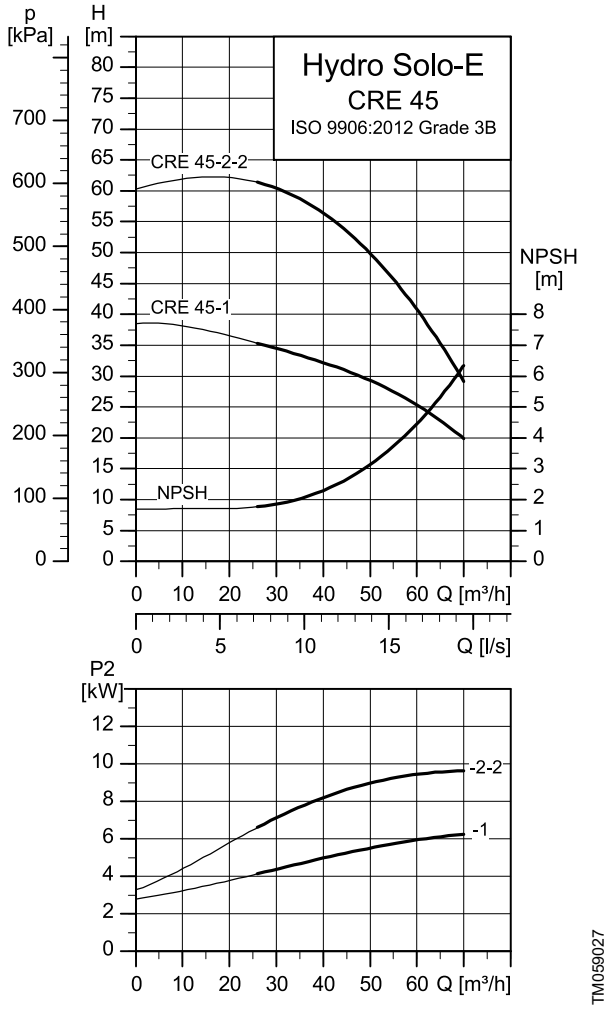

Electrical data

International range

Pump type	Motor [kW]	Full-load current [A]	Supply voltage [V]
CRE 45-1	7.50	14.10 - 11.20	3 × 380-500 V
CRE 45-2-2	11.00	20.30 - 16.00	3 × 380-500 V

Southern European range

Pump type	Motor [kW]	Full-load current [A]	Supply voltage [V]
CRE 45-2-2	11.00	20.30 - 16.00	3 × 380-500 V

Dimensions and weights

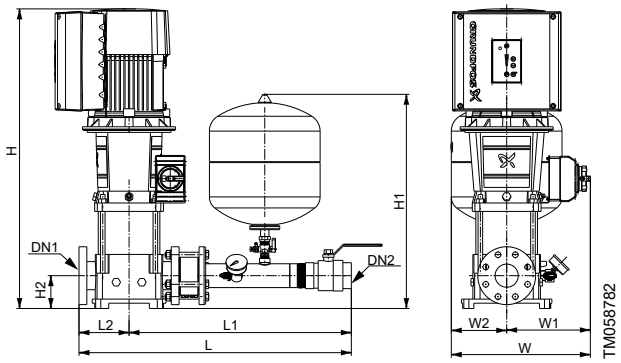

International range

Pump type	Tank volume [l]	Connection inlet/outlet	Net weight [kg]	Gross weight [kg]	H [mm]	H1 [mm]	H2 [mm]	W [mm]	W1 [mm]	W2 [mm]	L [mm]	L1 [mm]	L2 [mm]
CRE 45-1	33	DN 80	131	172	988	556	90	430	279	115	989	690	150
CRE 45-2-2	33	DN80	172	206	1155	638	140	491	277	177	998	690	183

Southern European range

Pump type	Tank volume [l]	Connection inlet/outlet	Net weight [kg]	Gross weight [kg]	H [mm]	H1 [mm]	H2 [mm]	W [mm]	W1 [mm]	W2 [mm]	L [mm]	L1 [mm]	L2 [mm]
CRE 45-2-2	25	DN80	159	179	1155	764	140	438	263	175	922	685	183

Hydro Solo-E with CRE 64

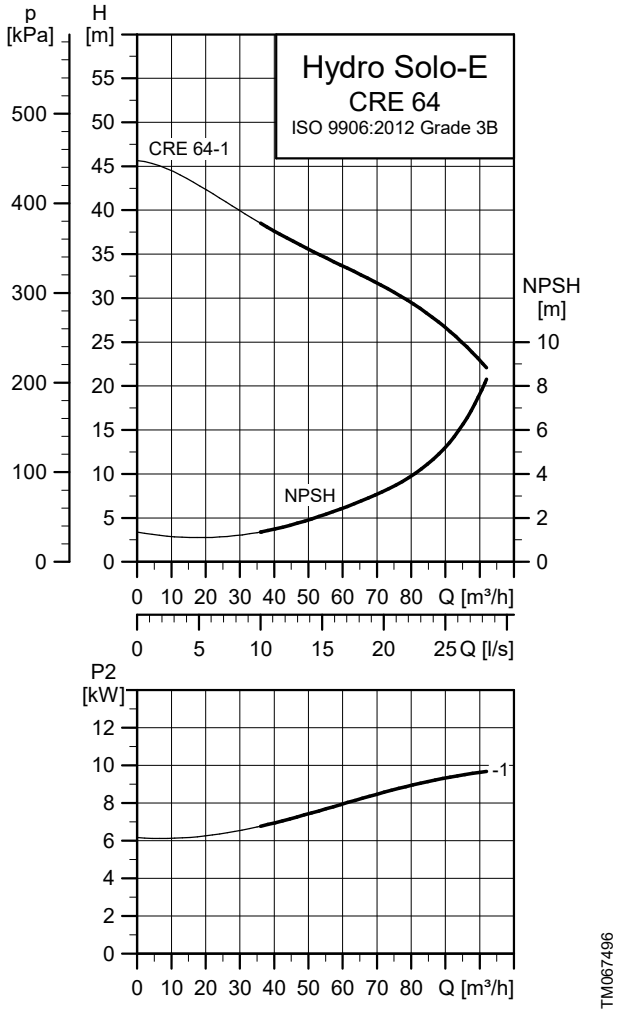

Electrical data

International range

Pump type	Motor [kW]	Full-load current [A]	Supply voltage [V]
CRE 64-1	11	20.3 - 16.0	3 × 380-500 V

Dimensions and weights

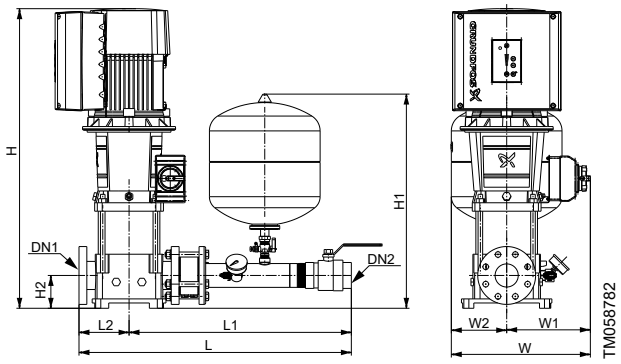

International range

Pump type	Tank volume [l]	Connection inlet/outlet	Net weight [kg]	Gross weight [kg]	H [mm]	H1 [mm]	H2 [mm]	W [mm]	W1 [mm]	W2 [mm]	L [mm]	L1 [mm]	L2 [mm]
CRE 64-1	33	DN 100	173	206	1080	638	140	454	277	177	1016	708	183

5. Accessories

Fieldbus communication interfaces

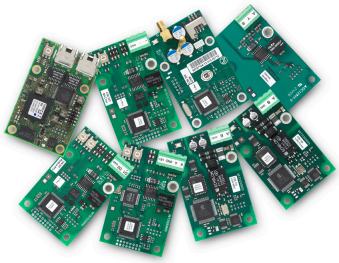

GR-1015444

The Grundfos fieldbus concept is the ideal solution for complete control of pumps and pump systems. The Communication Interface Module (CIM) enables data communication via open and interoperable networks.

Protocol	Name	Product Number	Antenna 4G/3G/2G
LON	CIM 100	96824797	
Profibus DP	CIM 150	96824793	
Modbus RTU	CIM 200	96824796	
Cellular	CIM 260-EUI	99439302	PN: 99518079
BACnet	CIM 300	96893770	
PROFINET IO Ethernet/ IP BACnet IP	CIM 500	96301408	

Note that the CIM module is not intended for use in any home appliance, home automation, home control system or consumer product in the UK.

Grundfos GO

GR-1015578

Grundfos GO offers intuitive, handheld assistance and access to various Grundfos online tools to help you monitor the product, change settings, collect data and make reports.

Grundfos GO variant	Product number
Grundfos MI 301	98046408

Float switch

GR-1031152

The MS1 float switches are on/off switches. Float switch MS 1 ACS is the ideal solution to control liquids with high hygienic requirements, for example, in wells, bottling plants and drinking water reservoirs.

Product name	Cable length	Product number
1 float switch MS1 ACS	10 metres	99023672
1 float switch MS1 ACS	20 metres	99023669

EMC filter

An EMC filter is used for reducing electrical noise. To meet the standard EN 55011, limit B, the Grundfos MGE motors 7.5-22 kW require an EMC filter.

For more information, scan the QR code below, or click the link.

https://net.grundfos.com/qr/i/96509223

6. Product numbers

Hydro Solo-E Optimum

Product number	Pump type	Voltage [V]	Stainless steel	Cast iron	Product range
99432874	Hydro Solo-E CRIE 3-7	1 × 200-240	●		International
99432875	Hydro Solo-E CRIE 5-5	1 × 200-240	●		International
99432876	Hydro Solo-E CRIE 5-7	1 × 200-240	●		International
99432877	Hydro Solo-E CRIE 5-9	3 × 380-500	●		International
99432878	Hydro Solo-E CRIE 10-3	1 × 200-240	●		International
99432879	Hydro Solo-E CRIE 10-3	3 × 380-500	●		International
99432880	Hydro Solo-E CRIE 15-2	3 × 380-500	●		International
99432881	Hydro Solo-E CRIE 15-3	3 × 380-500	●		International

Hydro Solo-E

Product number	Pump type	Voltage [V]	Stainless steel	Cast iron	Product range
98453506	Hydro Solo-E CRE 1-4	1 × 200-240		●	International
98769669	Hydro Solo-E CRE 1-6	1 × 200-240		●	International
98453546	Hydro Solo-E CRE 1-9	1 × 200-240		●	International
98453507	Hydro Solo-E CRE 1-13	1 × 200-240		●	International
98453542	Hydro Solo-E CRE 3-4	1 × 200-240		●	International
98453509	Hydro Solo-E CRE 3-5	1 × 200-240		●	International
98453510	Hydro Solo-E CRE 3-8	1 × 200-240		●	International
98453543	Hydro Solo-E CRE 3-11	1 × 200-240		●	International
98453544	Hydro Solo-E CRE 3-15	3 × 380-500		●	International
91048901	Hydro Solo-E CRE 3-15	3 × 380-500		●	International
98453511	Hydro Solo-E CRE 5-2	1 × 200-240		●	International
98915627	Hydro Solo-E CRE 5-4	1 × 200-240		●	International
98453512	Hydro Solo-E CRE 5-5	1 × 200-240		●	International
98453513	Hydro Solo-E CRE 5-9	3 × 380-500		●	International
91048902	Hydro Solo-E CRE 5-12	3 × 380-500		●	International
91048903	Hydro Solo-E CRE 5-14	3 × 380-500		●	International
98453519	Hydro Solo-E CRE 10-1	1 × 200-240		●	International
98601166	Hydro Solo-E CRE 10-2	1 × 200-240		●	International
98453520	Hydro Solo-E CRE 10-3	3 × 380-500		●	International
91048904	Hydro Solo-E CRE 10-5	3 × 380-500		●	International
91048905	Hydro Solo-E CRE 10-6	3 × 380-500		●	International
99150625	Hydro Solo-E CRE 15-2	3 × 380-500		●	International
99150626	Hydro Solo-E CRE 15-3	3 × 380-500		●	International
91048906	Hydro Solo-E CRE 15-4	3 × 380-500		●	International
91048907	Hydro Solo-E CRE 15-5	3 × 380-500		●	International
91048908	Hydro Solo-E CRE 15-7	3 × 380-500		●	International
91048909	Hydro Solo-E CRE 20-2	3 × 380-500		●	International
91048910	Hydro Solo-E CRE 20-3	3 × 380-500		●	International
91048911	Hydro Solo-E CRE 20-4	3 × 380-500		●	International
92815052	Hydro Solo-E CRE 20-4	3 × 380-500		●	International
99150631	Hydro Solo-E CRE 20-7	3 × 380-500		●	International
92815731	Hydro Solo-E CRE 20-7	3 × 380-500		●	International
91048913	Hydro Solo-E CRE 32-2	3 × 380-500		●	International
91048914	Hydro Solo-E CRE 32-4-2	3 × 380-500		●	International
91048915	Hydro Solo-E CRE 45-1	3 × 380-500		●	International
91048916	Hydro Solo-E CRE 45-2-2	3 × 380-500		●	International
91048917	Hydro Solo-E CRE 64-1	3 × 380-500		●	International
98488802	Hydro Solo-E CRE 1-6	1 × 200-240		●	Southern European

Product number	Pump type	Voltage [V]	Stainless steel	Cast iron	Product range
98478534	Hydro Solo-E CRE 1-9	1 × 200-240		●	Southern European
93219902	Hydro Solo-E CRE 1-9	1 × 200-240		●	Southern European
98478535	Hydro Solo-E CRE 1-13	1 × 200-240		●	Southern European
98478540	Hydro Solo-E CRE 3-8	1 × 200-240		●	Southern European
98478541	Hydro Solo-E CRE 3-11	1 × 200-240		●	Southern European
99172030	Hydro Solo-E CRE 3-15	3 × 380-500		●	Southern European
98478545	Hydro Solo-E CRE 5-5	1 × 200-240		●	Southern European
98478546	Hydro Solo-E CRE 5-9	3 × 380-500		●	Southern European
99172032	Hydro Solo-E CRE 5-12	3 × 380-500		●	Southern European
99172044	Hydro Solo-E CRE 5-14	3 × 380-500		●	Southern European
98478550	Hydro Solo-E CRE 10-3	3 × 380-500		●	Southern European
99172045	Hydro Solo-E CRE 10-5	3 × 380-500		●	Southern European
99172046	Hydro Solo-E CRE 10-6	3 × 380-500		●	Southern European
99172049	Hydro Solo-E CRE 15-2	3 × 380-500		●	Southern European
99172051	Hydro Solo-E CRE 15-3	3 × 380-500		●	Southern European
99172054	Hydro Solo-E CRE 15-5	3 × 380-500		●	Southern European
99172055	Hydro Solo-E CRE 15-7	3 × 380-500		●	Southern European
99172058	Hydro Solo-E CRE 20-2	3 × 380-500		●	Southern European
99172059	Hydro Solo-E CRE 20-3	3 × 380-500		●	Southern European
99172060	Hydro Solo-E CRE 20-4	3 × 380-500		●	Southern European
99172061	Hydro Solo-E CRE 20-7	3 × 380-500		●	Southern European
99172063	Hydro Solo-E CRE 32-2	3 × 380-500		●	Southern European
99172064	Hydro Solo-E CRE 32-4-2	3 × 380-500		●	Southern European
99172065	Hydro Solo-E CRE 45-2-2	3 × 380-500		●	Southern European
99507461	Hydro Solo-E CRIE 3-4	1 × 200-240	●		Netherlands
93113843	Hydro Solo-E CRIE 3-4	1 × 200-240	●		Netherlands
93139544	Hydro Solo-E CRIE 3-4	1 × 200-240	●		Netherlands
99204952	Hydro Solo-E CRIE 3-8	1 × 200-240	●		Netherlands
99204953	Hydro Solo-E CRIE 5-5	1 × 200-240	●		Netherlands
99204954	Hydro Solo-E CRIE 5-9	3 × 380-500	●		Netherlands
99204955	Hydro Solo-E CRIE 10-3	3 × 380-500	●		Netherlands
99204956	Hydro Solo-E CRIE 10-5	3 × 380-500	●		Netherlands
99204957	Hydro Solo-E CRIE 15-3	3 × 380-500	●		Netherlands
93135620	Hydro Solo-E CRIE 15-3	3 × 380-500	●		Netherlands

7. Grundfos Product Center

Online search and sizing tool to help you make the right choice.
From the international view, you can select your specific country to view the product range available to you.
International view: *http://product-selection.grundfos.com*

All the information you need in one place

Performance curves, technical specifications, pictures, dimensional drawings, motor curves, wiring diagrams, spare parts, service kits, 3D drawings, documents, system parts. The Product Center displays any recent and saved items - including complete projects - right on the main page.

Downloads

On the product pages, you can download installation and operating instructions, data booklets, service instructions, etc., in PDF format.

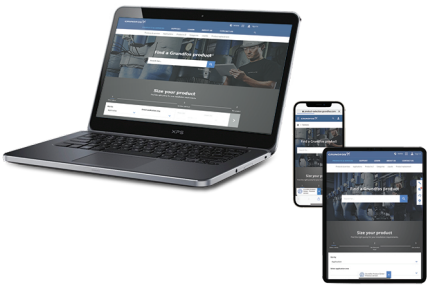

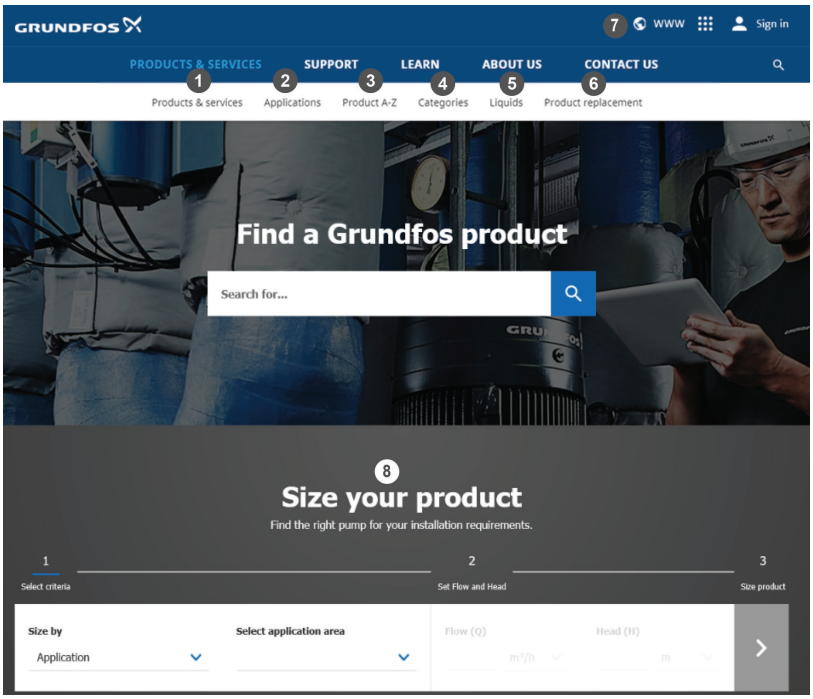

When you select your country, you will see the menus below. Note that some menus may not be available depending on the country.
Example: *https://product-selection.grundfos.com/uk*

Pos.	Description
1	**Products & services** enables you to find products and documents by typing a product number or name into the search field.
2	**Applications** enables you to choose an application to see how Grundfos can help you design and optimise your system.
3	**Products A-Z** enables you to look through a list of all the Grundfos products.
4	**Categories** enables you to look for a product category.
5	**Liquids** enables you to find pumps designed for aggressive, flammable or other special liquids.
6	**Product replacement** enables you to find a suitable replacement.
7	**WWW** enables you to select the country, which changes the language, the available product range and the structure of the website.
8	**Sizing** enables you to size a product based on your application and operating conditions.

8. Document quality feedback

To provide feedback about this document, use your smart device to scan the QR code.

FEEDBACK_V7140010

Click here to submit your feedback

Trademarks displayed in this material, including but not limited to Grundfos and the Grundfos logo, are registered trademarks owned by The Grundfos Group. © 2025 Grundfos Holding A/S, all rights reserved.

V7140010 **08.2025**
ECM: 1430368

GRUNDFOS Holding A/S
Poul Due Jensens Vej 7
DK-8850 Bjerringbro
Tel: +45 87 50 14 00
www.grundfos.com

GRUNDFOS