HYDRO SOLO-E

GRUNDFOS

Factory settings	
Date	Setting (SP)

Customer settings		
Date	Setting (SP)	Initials

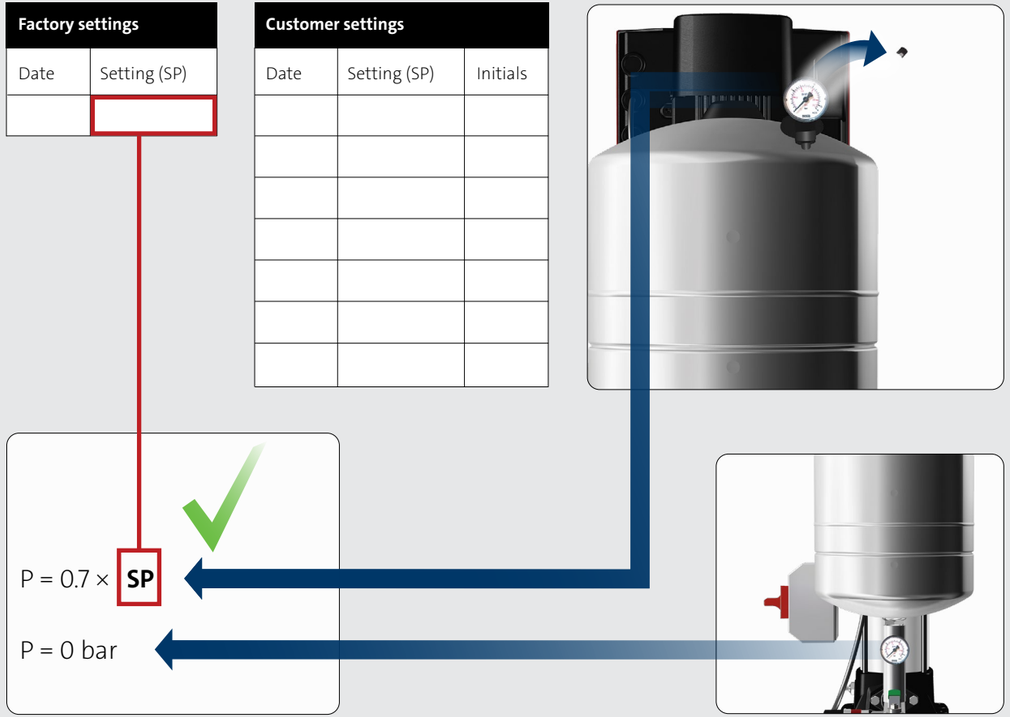

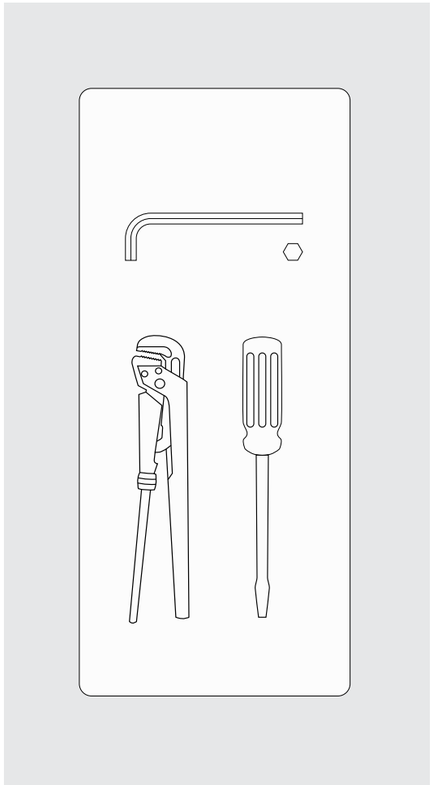

1

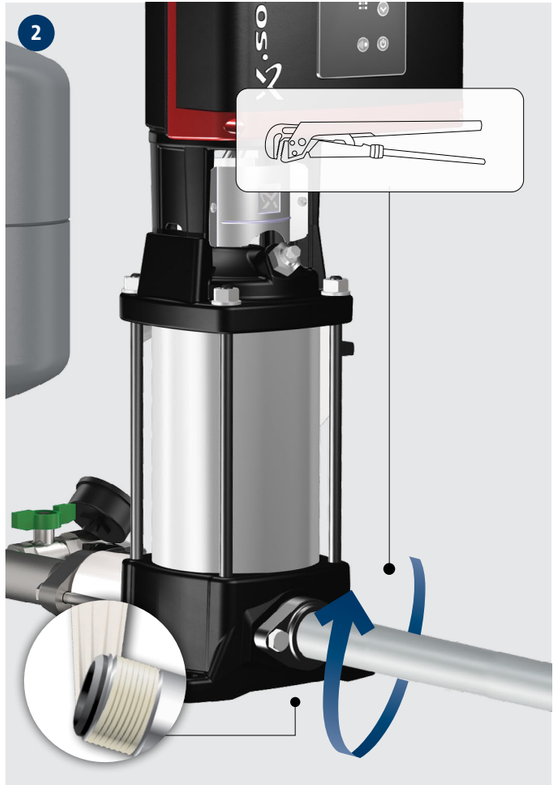
2

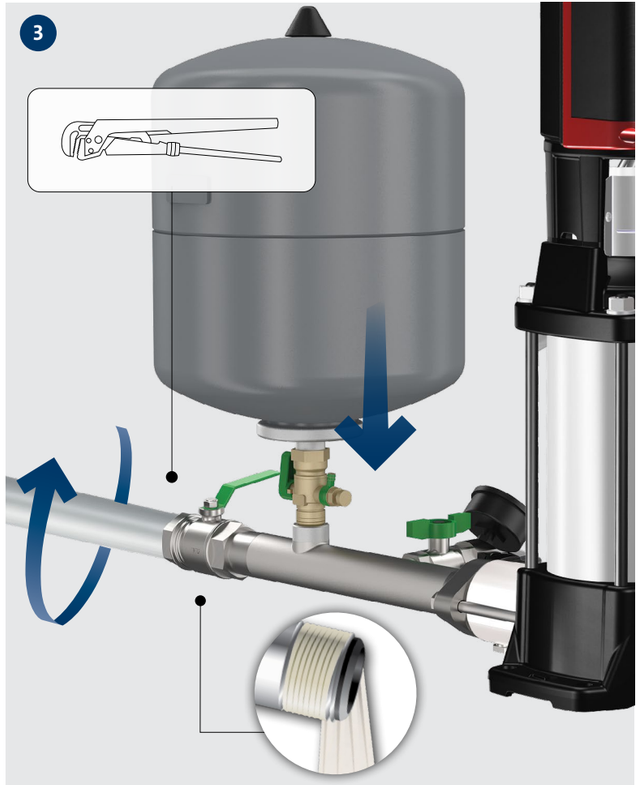
3

GRUNDFOS

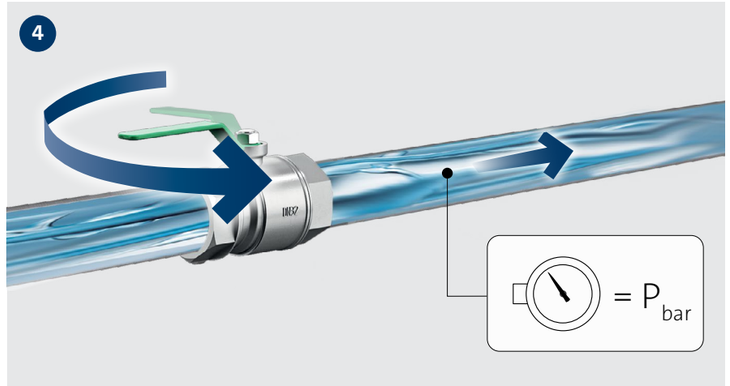
4
= P bar

5
ON

OPTIONAL

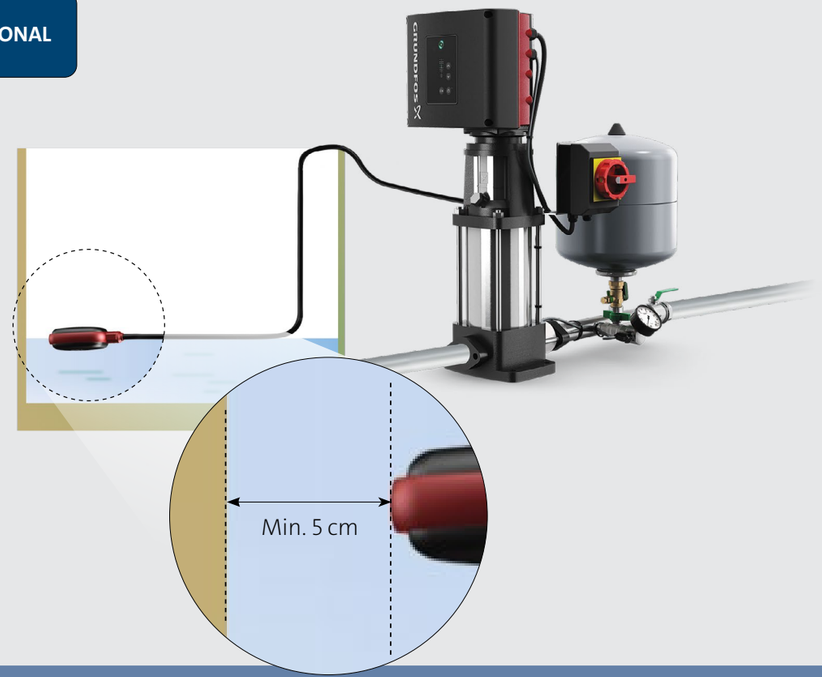

A

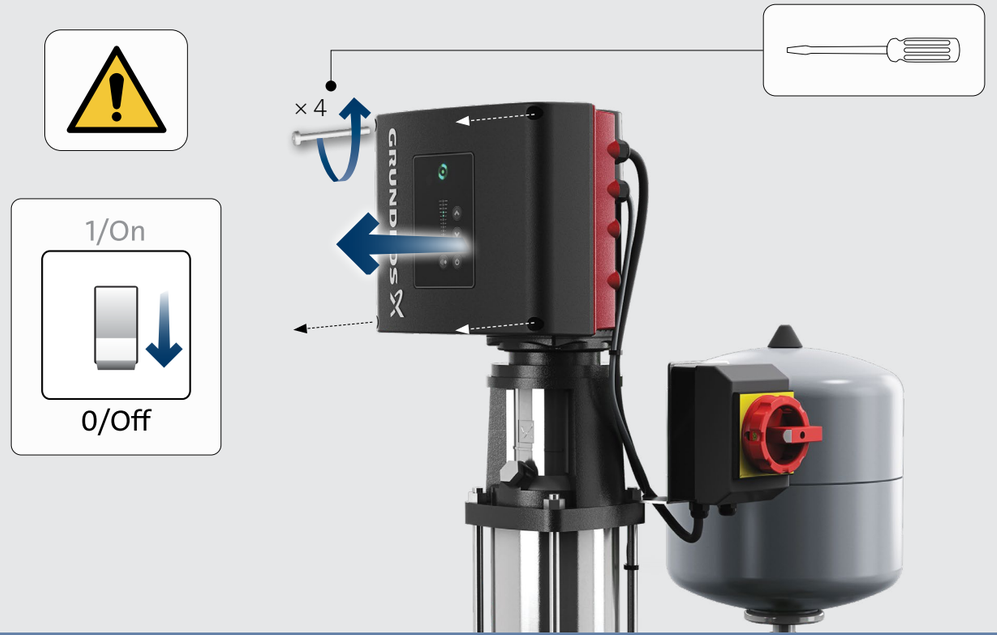

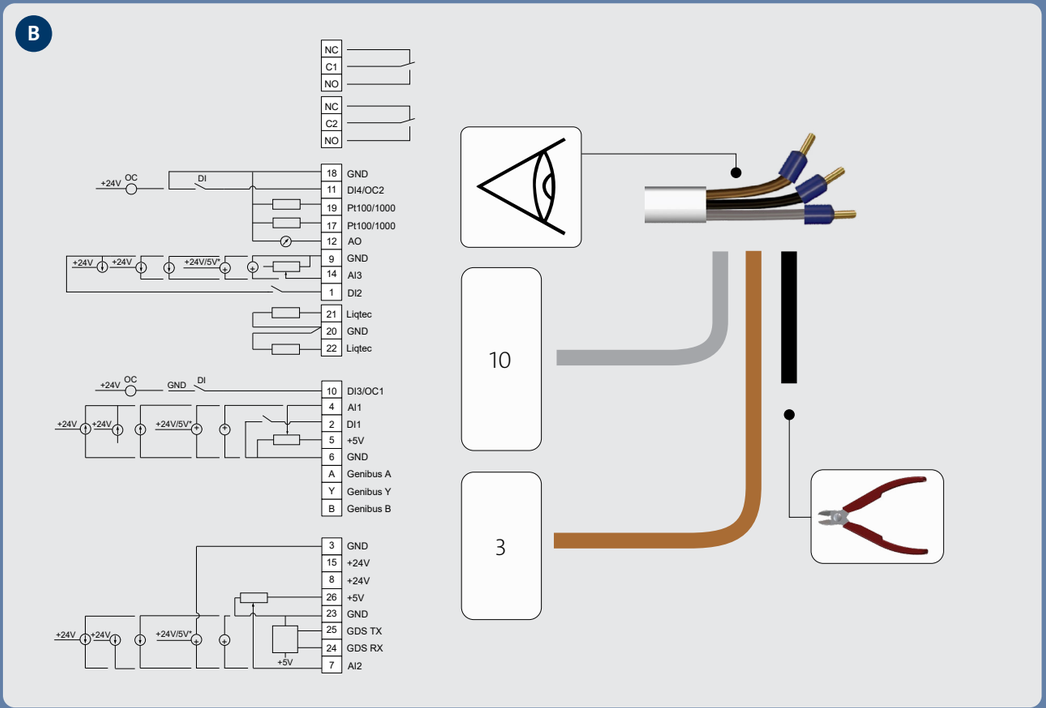
B
NC
C1
NO
NC
C2
NO
+24V
OC
DI
18 GND
11 DI4/OC2
19 Pt100/1000
17 Pt100/1000
12 AO
9 GND
14 AI3
1 DI2
21 Liqtec
20 GND
22 Liqtec
+24V
+24V
+24V/5V*
+24V
OC
GND
DI
10 DI3/OC1
4 AI1
2 DI1
5 +5V
6 GND
A Genibus A
Y Genibus Y
B Genibus B
+24V
+24V
+24V/5V*
3 GND
15 +24V
8 +24V
26 +5V
23 GND
25 GDS TX
24 GDS RX
7 AI2
+5V
10
3

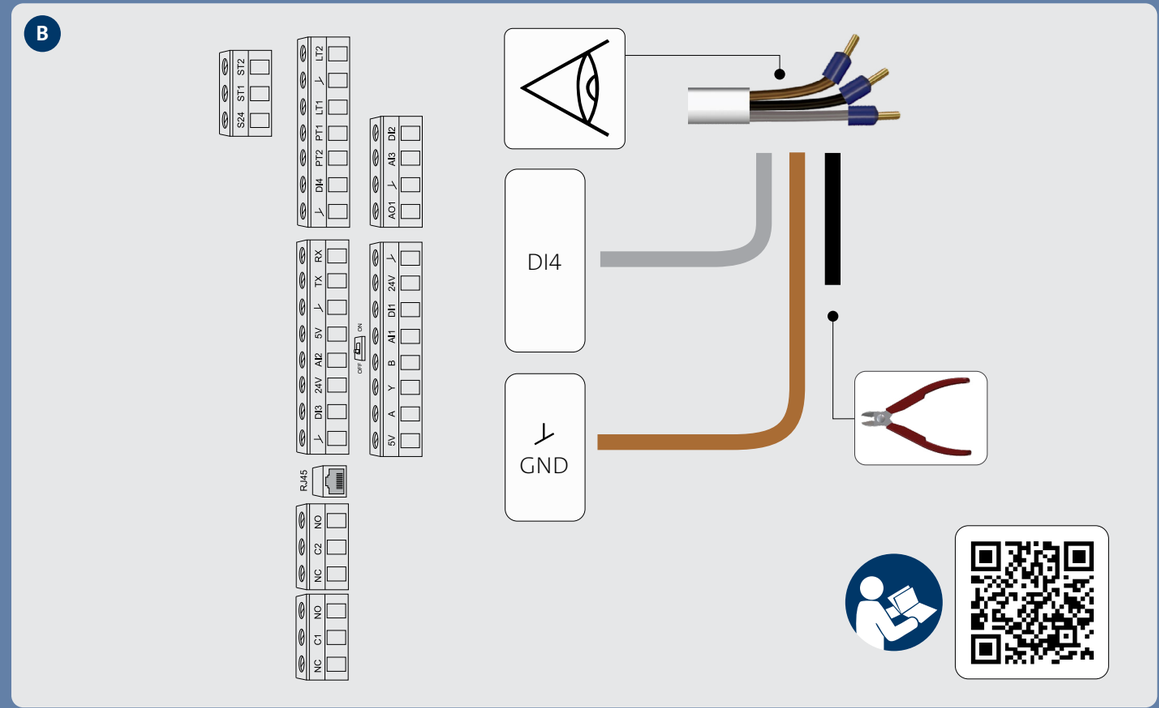
B
S24 ST1 ST2
NC C1 NO
NC C2 NO
RJ45
DI3 24V AI2 5V ⊥ TX RX
⊥ DI4 PT2 PT1 LT1 ⊥ LT2
ON
OFF
5V A Y B AI1 DI1 24V ⊥
⊥ AO1 ⊥ AI3 DI2
DI4
⊥
GND

C
OPEN
GO
Operating mode
Normal
bar
Status
Settings
Alarms and warnings
Assist
Mobile interface connected
Disconnect
Refresh
Reports
Help
Settings
D
Settings
Analog input 1
Function: Feedback sensor
Measured: Discharge pressure
Signal type: 4-20 mA
Sensor unit: bar
Minimum: 0.0
Maximum: 10.0
Analog input 2
Function: Other function
Measured: Inlet pressure
Signal type: 4-20 mA
Sensor unit: bar
Minimum: 0.0
Maximum: 6.0
Analog input 3
Not active
Refresh
Reports
Help
Analog input 2
E
Not active
Feedback sensor
OK
Cancel
Not active
OK
F
Settings
Analog input 1
Function: Feedback sensor
Measured: Discharge pressure
Signal type: 4-20 mA
Sensor unit: bar
Minimum: 0.0
Maximum: 10.0
Analog input 2
Not active
Analog input 3
Not active
Built-in Grundfos sensor
Pt100/1000 input 1
Not active
Refresh
Reports
Help
Not active
G
Settings
Not active
Digital input 1
Digital input 2
Digital input/output 3
Mode: Digital input
Function if input: Not active
Function if output: Not active
Digital input/output 4
Mode: Digital input
Function if input: Not active
Function if output: Not active
Pulse flowmeter
Volume per pulse
Refresh
Reports
Help
Digital input/output 3 or 4
H
Digital input 3
Mode
Digital input
Function if input
Not active
Input 3, activation delay
0 s
Input 3, duration timer
Function if output
Not active
Refresh
Reports
Help
Function, if input
I
Function if input
Alarm resetting
Dry running
Accumulated flow
OK
Refresh
Reports
Help
Dry running
OK

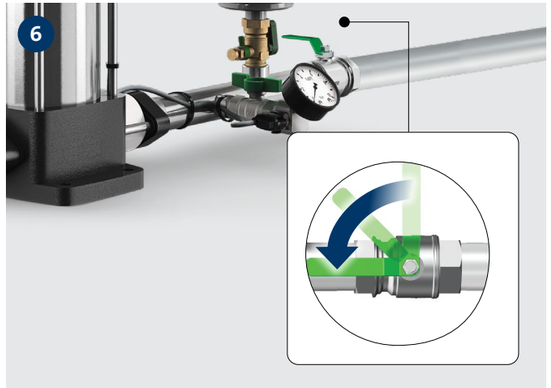
6

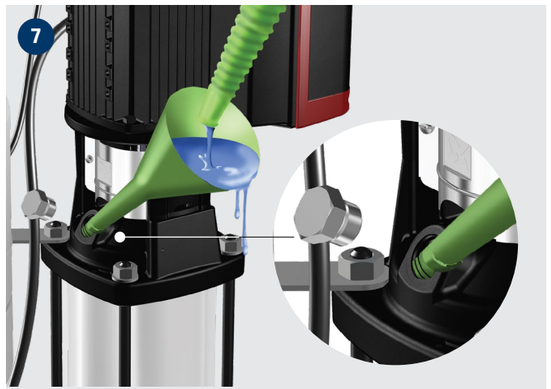
7

8
GRUNDFOS

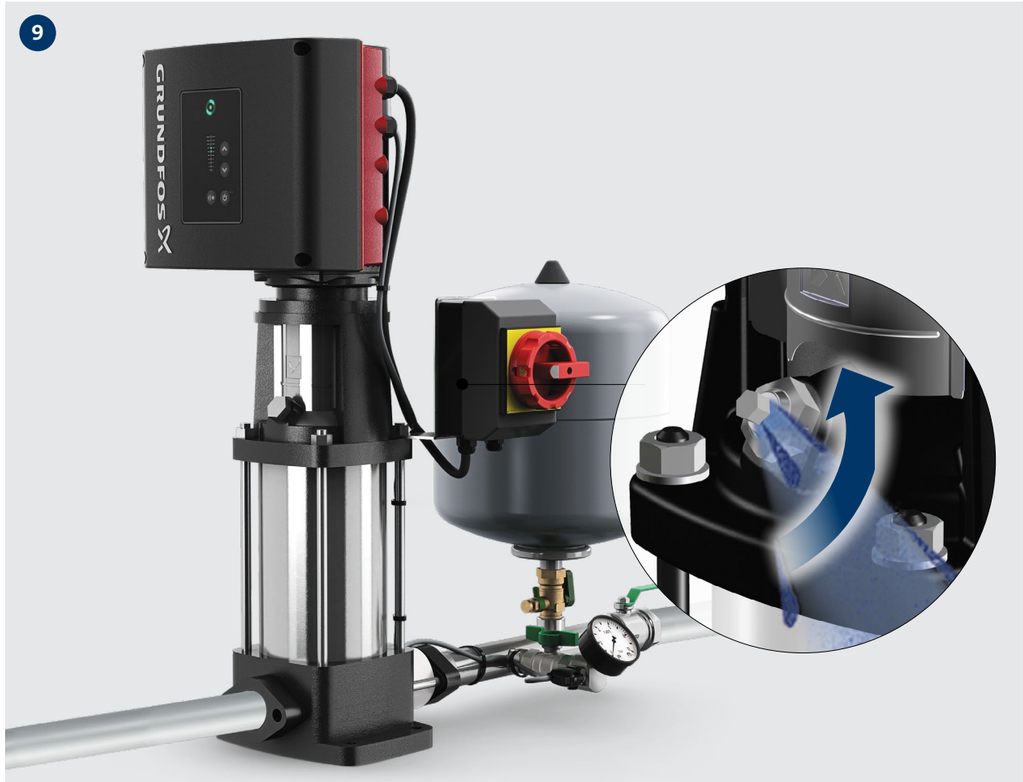
9
GRUNDFOS

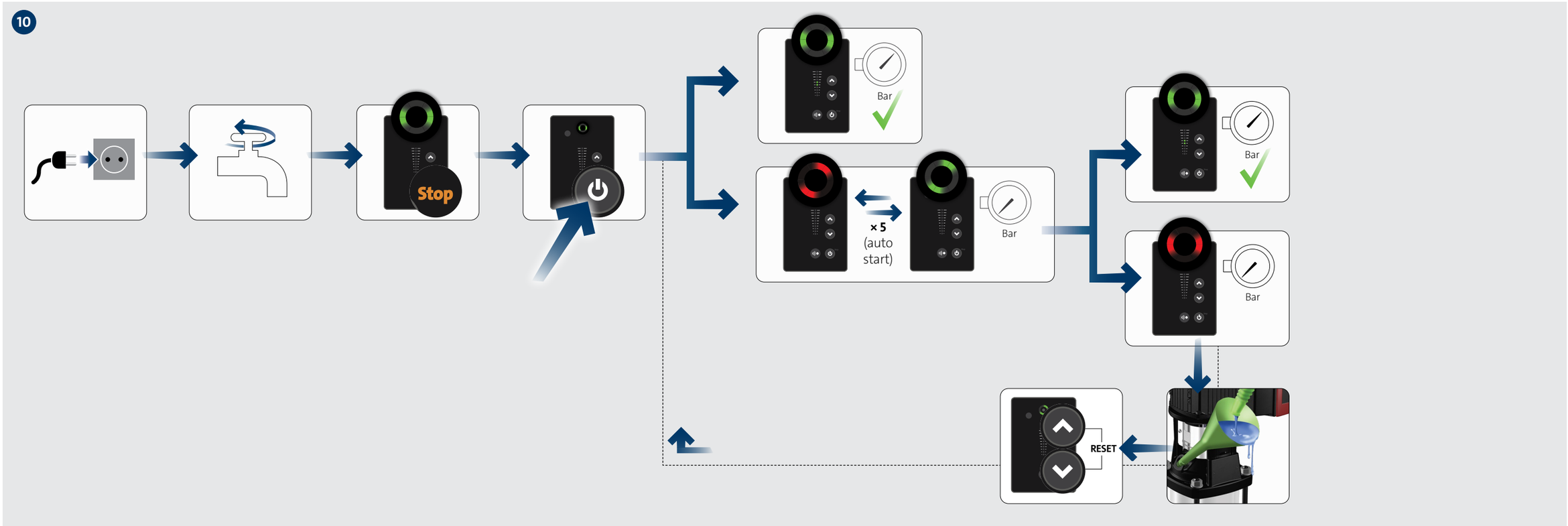
10
Stop
Bar
× 5
(auto
start)
Bar
Bar
Bar
RESET

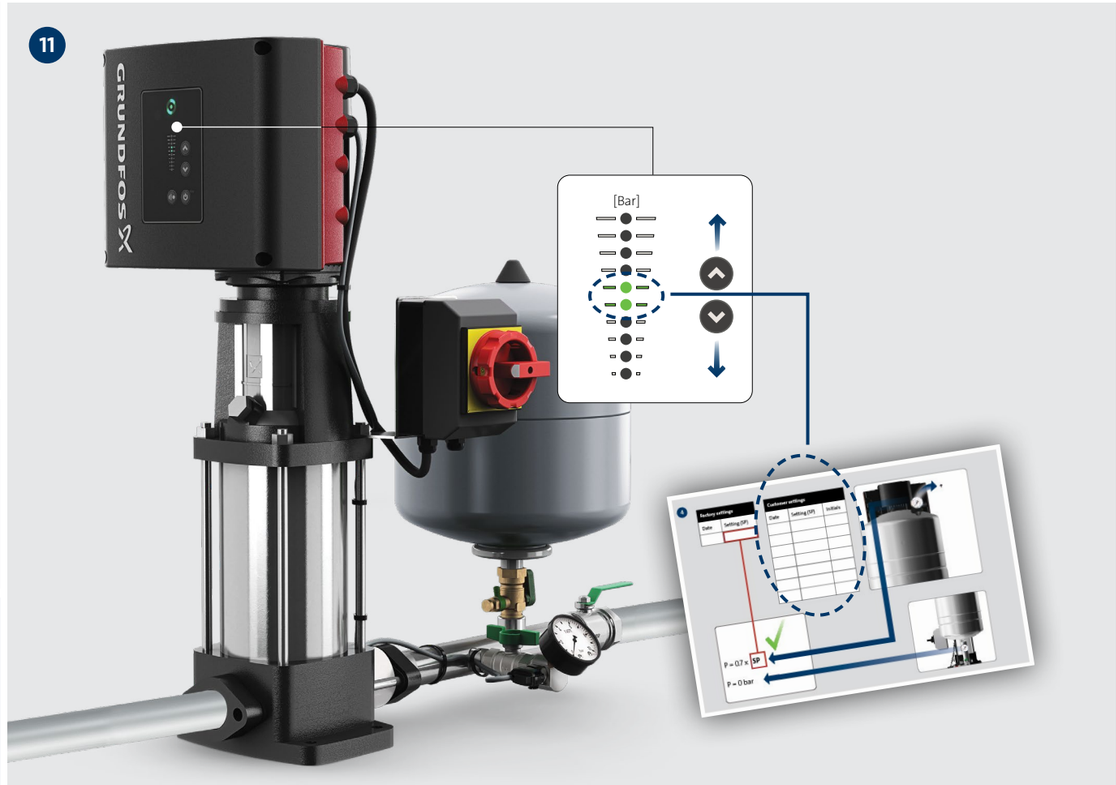
11
GRUNDFOS
[Bar]
Factory settings
Date
Setting (SP)
Customer settings
Date
Setting (SP)
Initials
P = 0.7 x SP
P = 0 bar

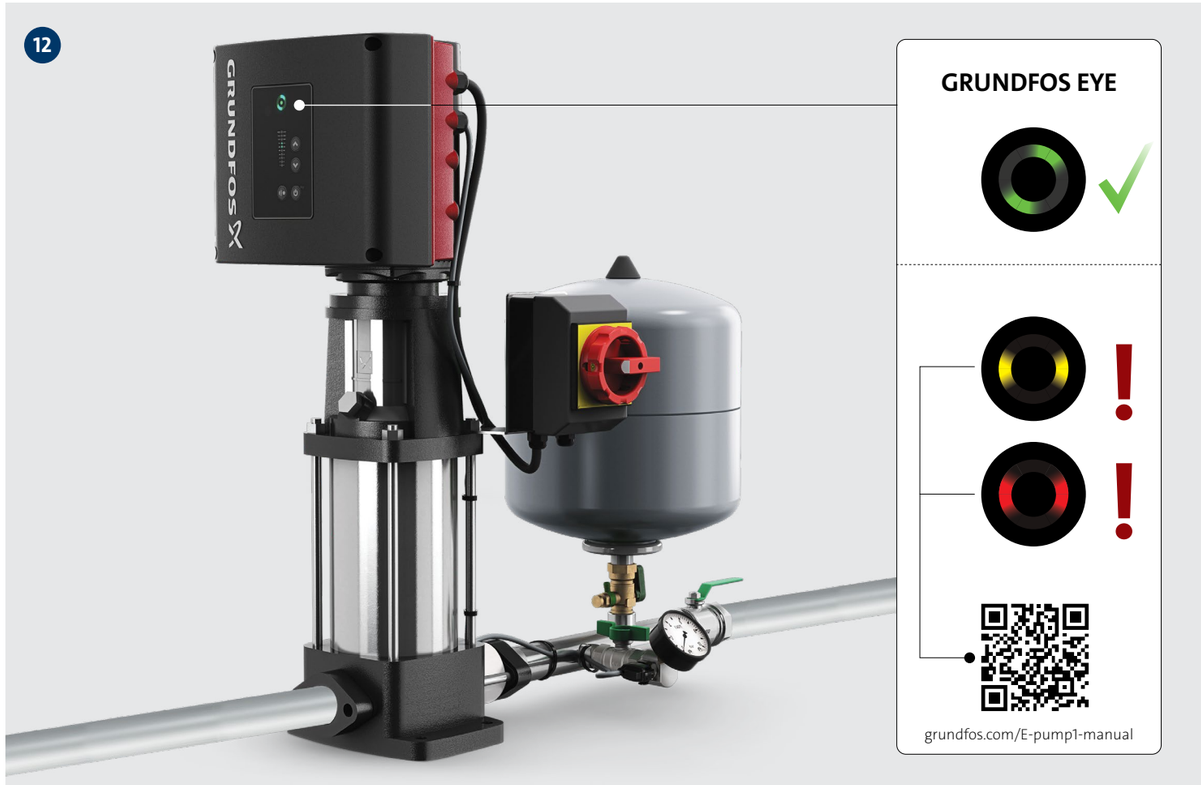
12
GRUNDFOS
GRUNDFOS EYE
grundfos.com/E-pump1-manual

13

98475844 03.2025

ECM: 1415400

GRUNDFOS Holding A/S
Poul Due Jensens Vej 7
DK-8850 Bjerringbro
Tel: +45 87 50 14 00
www.grundfos.com

The name Grundfos, the Grundfos logo are registered trademarks owned by Grundfos Holding A/S or Grundfos A/S, Denmark. All rights reserved worldwide.