SOLOLIFT2 WC-1, WC-3

Installation and operating instructions

GRUNDFOS

SOLOLIFT2 WC-1, WC-3

English (GB)
Installation and operating instructions 4
Appendix A. 12

Original installation and operating instructions

Table of contents

1. General information 4
1.1 Information for Australasia 4
1.2 Hazard statements 4
1.3 Notes 5

2. Product introduction 5
2.1 Product introduction. 5
2.2 Intended use 5
2.3 Pumped liquids 6

3. Receiving the product. 6
3.1 Transport 6

4. Installation 6
4.1 Mechanical installation 6
4.2 Electrical connection 6

5. Service 7
5.1 Service documentation 7
5.2 Maintenance 7
5.3 Adjustment of runtime 7
5.4 Service instructions 7

6. Fault finding the product 9
6.1 The motor does not start when the level in the tank reaches the start level 9
6.2 The motor hums but does not operate 9
6.3 The motor runs continuously or at irregular intervals 9
6.4 The pump runs but does not deliver the rated flow rate. 9
6.5 The lifting station evacuates slowly 9
6.6 Rattling noise from the lifting station, but water is evacuated 10
6.7 Odour from the tank. 10
6.8 Water from shower or another appliance connected to the lower inlets drains off slowly, and there is backflow from the lifting station. 10

7. Technical data 11

8. Disposing of the product 11

9. Document quality feedback 11

1. General information

This appliance shall not be used by children.

Children shall not play with the appliance.

Cleaning and user maintenance shall not be carried out by children.

Appliances can be used by persons with reduced physical, sensory, or mental capabilities, as well as persons with a lack of experience and knowledge. This requires that they are given supervision or instruction concerning the use of the appliance in a safe way and that they understand the hazards involved.

Read this document before you install the product. Installation and operation must comply with local regulations and accepted codes of good practice.

1.1 Information for Australasia

Installation and operation must be done in accordance with AS/NZS 3500 and PCA for Australasia.

1.2 Hazard statements

The symbols and hazard statements below may appear in Grundfos installation and operating instructions, safety instructions and service instructions.

DANGER

Indicates a hazardous situation which, if not avoided, will result in death or serious personal injury.

WARNING

Indicates a hazardous situation which, if not avoided, could result in death or serious personal injury.

CAUTION

Indicates a hazardous situation which, if not avoided, could result in minor or moderate personal injury.

The hazard statements are structured in the following way:

SIGNAL WORD

Description of the hazard

Consequence of ignoring the warning

- Action to avoid the hazard.

1.3 Notes

The symbols and notes below may appear in Grundfos installation and operating instructions, safety instructions and service instructions.

Observe these instructions for explosion-proof products.

A blue or grey circle with a white graphical symbol indicates that an action must be taken.

A red or grey circle with a diagonal bar, possibly with a black graphical symbol, indicates that an action must not be taken or must be stopped.

If these instructions are not observed, it may result in malfunction or damage to the equipment.

Tips and advice that make the work easier.

2. Product introduction

2.1 Product introduction

WC-1 and WC-3 are small, compact automatic lifting stations suitable for pumping domestic wastewater and sewage off places in private dwellings where wastewater cannot be led directly to the sewer by means of a natural downward slope.

This product is a domestic unit. Toilets connected to this unit can be used like any normal toilet and require minimum maintenance. The unit will operate automatically as soon as the required level of water enters the tank.

If you are away for a long period, for example, holidays, we recommend that you turn off the water supply to the toilet served by the unit.

Only the disposal of toilet paper, faecal matter and wastewater will be covered by warranty. Any damage due to foreign bodies such as cotton, condoms, sanitary towels, wet wipes, food, hair, metal, wood or plastic objects, will not be covered by warranty. Solvents, acids and other chemicals can also cause damage to the unit and will invalidate the warranty.

2.2 Intended use

The product is only suitable for pumping wastewater from a cabinet shower, bidet and/or washbasin as well as sewage from a toilet.

The product is only suitable for domestic use.

Applications according to EN 12050-3.

Not for public and heavy commercial or industrial use, only a limited number of users.

Installation with direct connection to a toilet and in the same room as sanitary appliances.

A second toilet must be available above the backflow level.

The product must be fastened to the floor to prevent uplift and turning.

2.3 Pumped liquids

Domestic wastewater and sewage containing toilet paper and faeces.

Ordinary liquids for cleaning of the appliances connected. pH value: 4-10.

The product is designed for flush volumes of 4, 6 and 9 litres. A 4-litre flush is permissible only if the amount of solids in the pumped liquid is small.

The product must not pump harsh chemicals or solvents. See the quick guide.

3. Receiving the product

3.1 Transport

WARNING
Crushing hazard
Death or serious personal injury

- Stack maximum two pallets together under transport.

4. Installation

Installation must be carried out by specially trained persons and according to local regulations.

Do not pull or lift the product by the power cable.

4.1 Mechanical installation

The product must be accessible for maintenance and repair.

The product must be placed in a frost-free room to prevent the pumped liquid from freezing.

Make sure that all external pipes are adequately insulated.

The outlet pipe must be made of rigid material, such as copper, or of rigid PVC with solvent-welded joints.

To prevent the transmission of vibrations to buildings, make sure that the pipes are thoroughly fixed and that fittings cannot move and are not in contact with building parts.

Extension pipes between the toilet and lifting station must not be longer than 150 mm due to the increased risk of clogging.

4.2 Electrical connection

DANGER
Electric shock
Death or serious personal injury

- The protective earth (PE) of the power outlet must be connected to the protective earth of the product. The plug must have the same PE connection system as the power outlet.

DANGER
Electric shock
Death or serious personal injury

- The installation must be fitted with a residual-current device (RCD) with a tripping current less than 30 mA.

DANGER
Electric shock
Death or serious personal injury

- The product must be connected to an external main switch with a minimum contact gap of 3 mm (0.12 inch) in all poles.

DANGER
Electric shock
Death or serious personal injury

- Power cables without a plug must be connected to a supply disconnecting device incorporated in the fixed wiring according to the local wiring rules.
- If the power cable is damaged, it must be replaced by the manufacturer, the manufacturer's service partner or a similarly qualified person.

Electrical connection must be carried out by an authorised electrician.

Make sure that the product is suitable for the supply voltage and frequency available at the installation site.

The thermal switch cuts out the motor in case of overheating and starts it again automatically after cooling.

5. Service

Always use original accessories from Grundfos to ensure safe and reliable operation.

WARNING
Electric shock
Death or serious personal injury
- Before starting any work on the product, make sure that the power supply has been switched off and that it cannot be accidentally switched on.

Maintenance and service must be carried out by specially trained persons and according to local regulations.

If the power cable is damaged, it must be replaced by the manufacturer, the manufacturer's service partner or similarly qualified person.

The product must be thoroughly cleaned before it is returned for service. Otherwise, the warranty will be void.

5.1 Service documentation

Service documentation is available at www.product-selection.grundfos.com.

If you have any questions, contact the nearest Grundfos company or service workshop.

5.2 Maintenance

The lifting station does not require any special maintenance, but we recommend that you check operation and pipe connections at least once a year.

Change the carbon filter once a year.

5.3 Adjustment of runtime

The default setting ensures proper operation in most pipes. If the pipes are particularly long or short, it may be necessary to adjust the runtime.

5.4 Service instructions

CAUTION
Hot surface
Minor or moderate personal injury
- Wear protective gloves or wait until the surface of the pump has cooled down.

5.4.1 Removing dirt from impeller or grinder

If the impeller or grinder is stuck due to dirt or impurities, follow the steps below to free the impeller or grinder:

1. Disconnect the power supply.
2. Unscrew the plug in the cover.
3. Insert a screwdriver (min. 110 mm) through the plug hole and into the slot of the shaft end. Turn the shaft right and left to free the impeller or grinder from dirt.
4. Fit the plug, and switch on the power supply to check if the impeller or grinder can rotate freely.

5.4.2 Operation by means of a power drill

If the product cannot be operated by electrical power, disconnect the power supply and empty the tank by means of a power drill.

5.4.3 Unblocking the pressure switch pipe

If the pressure switch pipe is blocked, follow the steps below to unblock it.

The pressure switch unit can be removed separately.

1. If the water level in the tank is above the motor flange, disconnect the power supply and drain the tank by means of the drain hose (accessory).
2. Unscrew the cover.
3. Pull out the complete pressure switch.
4. Check and clean the pressure switch pipe. Make sure that the little tube in the top of the pipe has not become blocked while you have cleaned the pipe.
5. Lubricate the sealing area of the pressure switch for easier fitting.

5.4.4 Removing a foreign body in the tank

If there is a foreign body in the tank, follow the steps below to remove it.

CAUTION
Sharp element
Minor or moderate personal injury

- Beware of the sharp edges on the grinder. Wear protective gloves.

1. If the water level in the tank is above the motor flange, disconnect the power supply and drain the tank by means of the drain hose.
2. Unscrew the cover.
3. Remove the four screws of the motor flange.
4. Lift the motor flange to reduce the compression of the O-ring. Insert a screwdriver into the notch underneath the power cable and press it down.
5. Lift out the complete motor-pump unit by the handles.

   Lift the unit vertically before tilting it.

6. Check and clean the tank and impeller or grinder.

5.4.5 Carbon filter

Replace the carbon filter once a year to ensure sufficient filter function.

Instead of using a carbon filter, SOLOLIFT2 can also be vented through a venting pipe. In this case, a venting valve is needed. Product number: 98059587.

6. Fault finding the product

DANGER
Electric shock
Death or serious personal injury

- Before starting any work on the product, make sure that the power supply has been switched off and that it cannot be accidentally switched on.

6.1 The motor does not start when the level in the tank reaches the start level

Cause	Remedy
Supply failure.	• Reestablish the power supply.
A fuse is blown. If a new fuse blows at once, either the cable or motor is faulty.	• Replace the fuse. • Measure the cable and motor. If the cable or motor is defective, replace the defective parts.
The pressure switch pipe is blocked.	• Remove the pressure switch and clean the pipe.

6.2 The motor hums but does not operate

Cause	Remedy
The impeller or grinder is stuck.	• Free the impeller or grinder and check that it can rotate freely.
The motor or capacitor is defective.	• Replace the motor or capacitor.
The control board is defective.	• Replace the control board.

6.3 The motor runs continuously or at irregular intervals

Cause	Remedy
Water is leaking from the inlet into the tank.	• Check for leaking appliances.
Water is leaking back into the tank from the outlet pipe.	• Check the non-return flap.
The pressure switch is defective.	• Replace the pressure switch unit.

6.4 The pump runs but does not deliver the rated flow rate

Cause	Remedy
The pump or tank is blocked.	• Remove the blockage.
There is an air pocket in the pump or the vent hole in the pump housing is blocked.	• Check operation of the vent valve in the tank. • Check that the carbon filter is not wet. • Check that the vent hole in the pump housing is not blocked.
The outlet port or pipe is blocked.	• Remove the blockage. • Check the non-return flap.

6.5 The lifting station evacuates slowly

Cause	Remedy
The outlet pipe is too long or has an excessive number of bends.	• Increase the outlet pipe size. • Change pipes to reduce the number of bends. • Change bends to soft bends.
The pump housing is leaky.	• Replace the pump housing (service part).
The hydraulics are blocked.	• Check and clean the hydraulics and grinder.

6.6 Rattling noise from the lifting station, but water is evacuated

Cause	Remedy
A foreign body is hitting the impeller or grinder.	• Remove the foreign body.

6.7 Odour from the tank

Cause	Remedy
The carbon filter is contaminated.	• Replace the carbon filter.

6.8 Water from shower or another appliance connected to the lower inlets drains off slowly, and there is backflow from the lifting station

Cause	Remedy
The non-return flap in the inlet is stuck, it does not open or close sufficiently.	• Check the non-return flap.
The hydraulics or grinder is blocked.	• Check and clean the hydraulics and grinder.
The start level has changed.	• Check and clean the pressure switch pipe.
The start level has changed.	• Check and clean the float switch pipe.
The inlet pipe diameter is too small.	• Use a pipe with a larger diameter.

7. Technical data

Supply voltage	1 × 220-240 V -10 % / +6 %, 50 Hz
Power consumption	Maximum 620 W
Power factor	Cos φ 0.87 / 0.92
Speed	2800 min^{-1}
Rated current	3 A
Insulation class	F
Noise level	< 70 dB(A) to 12050-2
Flow rate	Maximum 149 l/min
Supply cable	1.5 m, 0.75 mm^2 (H05VV-F-3G)
Net weight	7.3 kg
Start level	72 mm above bottom
Stop level	52 mm above bottom
Liquid temperature	Maximum 50 °C
Ambient temperature	5-35 °C
Duty	S3 - 50 % - 1 minute (30 seconds on; 30 seconds off)
System pressure	Maximum pump head: 8 m
	Maximum system head: 6 m

The system pressure must not exceed 6 m head to guarantee a sufficient drain of the connected sanitary appliances.

Approvals and markings	
CE	EAC

8. Disposing of the product

This product or parts of it must be disposed of in an environmentally sound way.

1. Use the public or private waste collection service.
2. If this is not possible, contact the nearest Grundfos company or service workshop.

The crossed-out wheelie bin symbol on a product means that it must be disposed of separately from household waste. When a product marked with this symbol reaches its end of life, take it to a collection point designated by the local waste disposal authorities. The separate collection and recycling of such products will help protect the environment and human health.

See also end-of-life information at *www.grundfos.com/product-recycling*.

9. Document quality feedback

To provide feedback about this document, scan the QR code using your phone's camera or a QR code app.

FEEDBACK_97771615

Click here to submit your feedback

A.1. Appendix

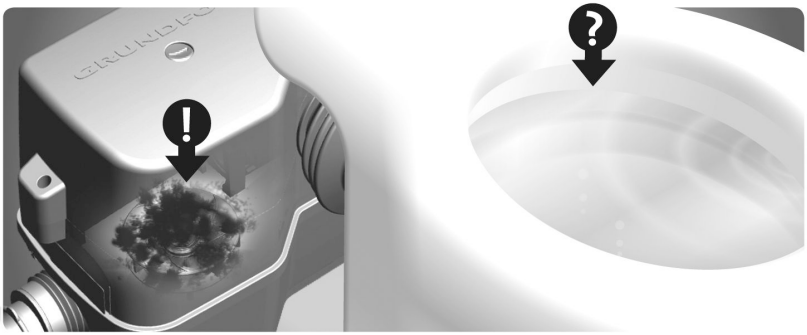

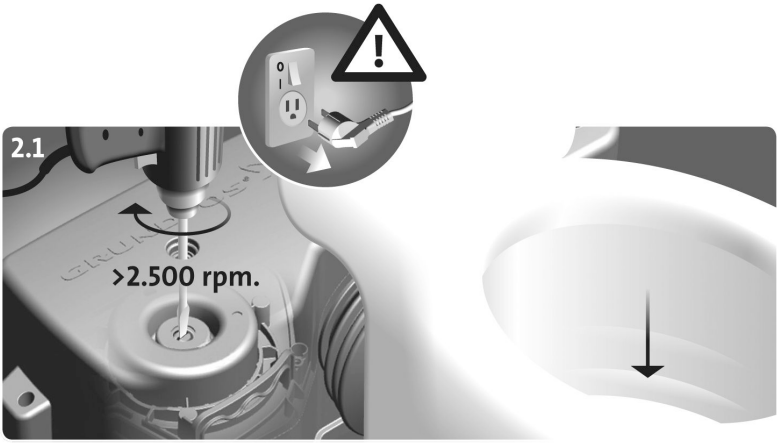
2.1
>2.500 rpm.

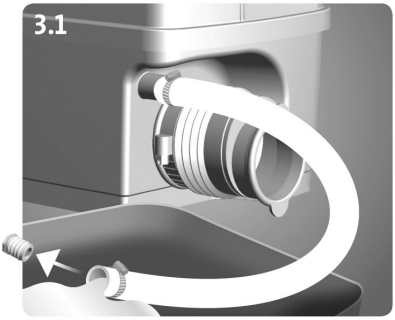
3.1

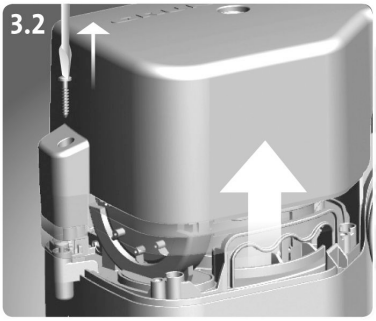
3.2

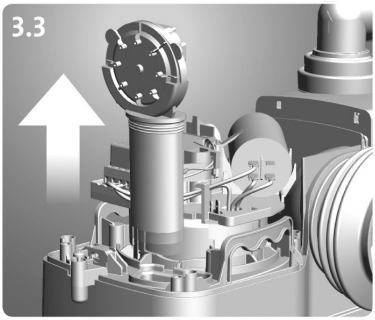
3.3

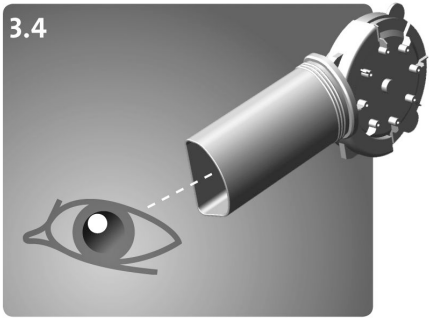
3.4

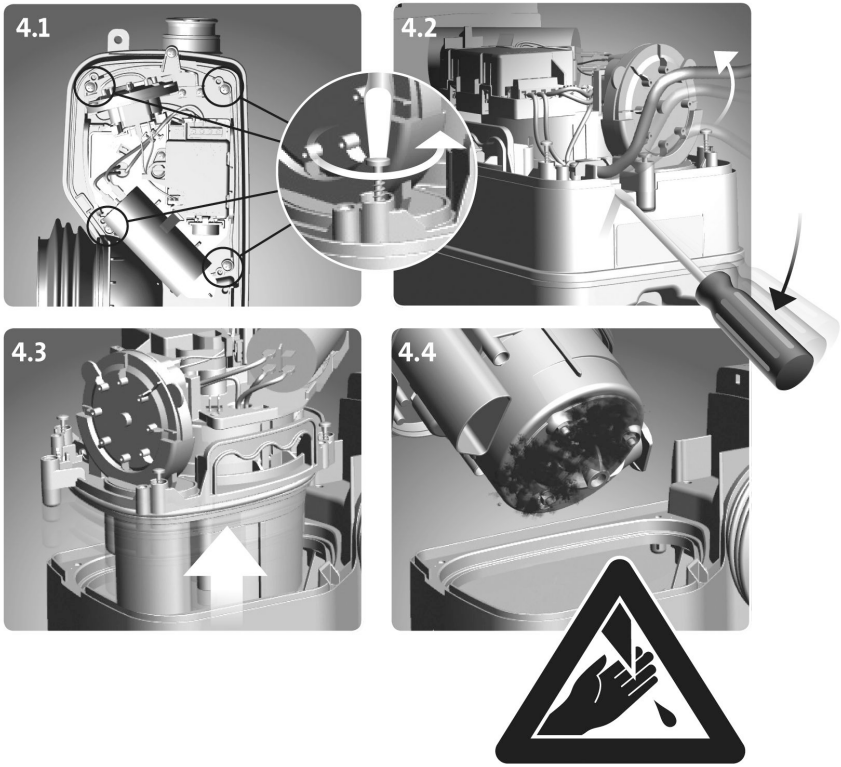
4.1
4.2
4.3
4.4

Argentina
Bombas GRUNDFOS de Argentina S.A.
Ruta Panamericana km. 37.500industin
1619 - Garín Pcia. de B.A.
Tel.: +54-3327 414 444
Fax: +54-3327 45 3190

Australia
GRUNDFOS Pumps Pty. Ltd.
P.O. Box 2040
Regency Park
South Australia 5942
Tel.: +61-8-8461-4611
Fax: +61-8-8340-0155

Austria
GRUNDFOS Pumpen Vertrieb
Ges.m.b.H.
Grundfosstraße 2
A-5082 Grödig/Salzburg
Tel.: +43-6246-883-0
Fax: +43-6246-883-30

Belgium
N.V. GRUNDFOS Bellux S.A.
Boomsesteenweg 81-83
B-2630 Aartselaar
Tel.: +32-3-870 7300
Fax: +32-3-870 7301

Bosnia and Herzegovina
GRUNDFOS Sarajevo
Zmaja od Bosne 7-7A
BiH-71000 Sarajevo
Tel.: +387 33 592 480
Fax: +387 33 590 465
www.ba.grundfos.com
E-mail: grundfos@bih.net.ba

Brazil
BOMBAS GRUNDFOS DO BRASIL
Av. Humberto de Alencar Castelo
Branco, 630
CEP 09850 - 300
São Bernardo do Campo - SP
Tel.: +55-11 4393 5533
Fax: +55-11 4343 5015

Bulgaria
Grundfos Bulgaria EOOD
Slatina District
Iztochna Tangenta street no. 100
BG - 1592 Sofia
Tel.: +359 2 49 22 200
Fax: +359 2 49 22 201
E-mail: bulgaria@grundfos.bg

Canada
GRUNDFOS Canada inc.
2941 Brighton Road
Oakville, Ontario
L6H 6C9
Tel.: +1-905 829 9533
Fax: +1-905 829 9512

China
GRUNDFOS Pumps (Shanghai) Co. Ltd.
10F The Hub, No. 33 Suhong Road
Minhang District
Shanghai 201106 PRC
Tel.: +86 21 612 252 22
Fax: +86 21 612 253 33

Colombia
GRUNDFOS Colombia S.A.S.
Km 1.5 vía Siberia-Cota Conj. Potrero
Chico,
Parque Empresarial Arcos de Cota Bod.
1A.
Cota, Cundinamarca
Tel.: +57(1)-2913444
Fax: +57(1)-8764586

Croatia
GRUNDFOS CROATIA d.o.o.
Buzinski prilaz 38, Buzin
HR-10010 Zagreb
Tel.: +385 1 6595 400
Fax: +385 1 6595 499
www.hr.grundfos.com

Czech Republic
GRUNDFOS Sales Czechia and Slovakia
s.r.o.
Čajkovského 21
779 00 Olomouc
Tel.: +420-585-716 111

Denmark
GRUNDFOS DK A/S
Martin Bachs Vej 3
DK-8850 Bjerringbro
Tel.: +45-87 50 50 50
Fax: +45-87 50 51 51
E-mail: info_GDK@grundfos.com
www.grundfos.com/DK

Estonia
GRUNDFOS Pumps Eesti OÜ
Peterburi tee 92G
11415 Tallinn
Tel.: + 372 606 1690
Fax: + 372 606 1691

Finland
OY GRUNDFOS Pumput AB
Trukkikuja 1
FI-01360 Vantaa
Tel.: +358-(0) 207 889 500

France
Pompes GRUNDFOS Distribution S.A.
Parc d'Activités de Chesnes
57, rue de Malacombe
F-38290 St. Quentin Fallavier (Lyon)
Tel.: +33-4 74 82 15 15
Fax: +33-4 74 94 10 51

Germany
GRUNDFOS GMBH
Schlüterstr. 33
40699 Erkrath
Tel.: +49-(0) 211 929 69-0
Fax: +49-(0) 211 929 69-3799
E-mail: infoservice@grundfos.de
Service in Deutschland:
kundendienst@grundfos.de

Greece
GRUNDFOS Hellas A.E.B.E.
20th km. Athinon-Markopoulou Av.
P.O. Box 71
GR-19002 Peania
Tel.: +0030-210-66 83 400
Fax: +0030-210-66 46 273

Hong Kong
GRUNDFOS Pumps (Hong Kong) Ltd.
Unit 1, Ground floor, Siu Wai industrial
Centre
29-33 Wing Hong Street & 68 King Lam
Street, Cheung Sha Wan
Kowloon
Tel.: +852-27861706 / 27861741
Fax: +852-27858664

Hungary
GRUNDFOS South East Europe Kft.
Tópark u. 8
H-2045 Törökbálint
Tel.: +36-23 511 110
Fax: +36-23 511 111

India
GRUNDFOS Pumps India Private
Limited
118 Old Mahabalipuram Road
Thoraipakkam
Chennai 600 097
Tel.: +91-44 2496 6800

Indonesia
PT GRUNDFOS Pompa
Graha intirub Lt. 2 & 3
Jln. Cililitan Besar No.454. Makasar,
Jakarta Timur
ID-Jakarta 13650
Tel.: +62 21-469-51900
Fax: +62 21-460 6910 / 460 6901

Ireland
GRUNDFOS (Ireland) Ltd.
Unit A, Merrywell Business Park
Ballymount Road Lower
Dublin 12
Tel.: +353-1-4089 800
Fax: +353-1-4089 830

Italy
GRUNDFOS Pompe Italia S.r.l.
Via Gran Sasso 4
I-20060 Truccazzano (Milano)
Tel.: +39-02-95838112
Fax: +39-02-95309290 / 95838461

Japan
GRUNDFOS Pumps K.K.
1-2-3, Shin-Miyakoda, Kita-ku
Hamamatsu
431-2103 Japan
Tel.: +81 53 428 4760
Fax: +81 53 428 5005

Kazakhstan
Grundfos Kazakhstan LLP
7' Kyz-Zhibek Str., Kok-Tobe micr.
KZ-050020 Almaty Kazakhstan
Tel.: +7 (727) 227-98-55/56

Korea
GRUNDFOS Pumps Korea Ltd.
6th Floor, Aju Building 679-5
Yeoksam-dong, Kangnam-ku, 135-916
Seoul, Korea
Tel.: +82-2-5317 600
Fax: +82-2-5633 725

Latvia
SIA GRUNDFOS Pumps Latvia
Deglava biznesa centrs
Augusta Deglava ielā 60
LV-1035, Rīga,
Tel.: + 371 714 9640, 7 149 641
Fax: + 371 914 9646

Lithuania
GRUNDFOS Pumps UAB
Smolensko g. 6
LT-03201 Vilnius
Tel.: + 370 52 395 430
Fax: + 370 52 395 431

Malaysia
GRUNDFOS Pumps Sdn. Bhd.
7 Jalan Peguam U1/25
Glenmarie industrial Park
40150 Shah Alam, Selangor
Tel.: +60-3-5569 2922
Fax: +60-3-5569 2866

Mexico
Bombas GRUNDFOS de México
S.A. de C.V.
Boulevard TLC No. 15
Parque industrial Stiva Aeropuerto
Apodaca, N.L. 66600
Tel.: +52-81-8144 4000
Fax: +52-81-8144 4010

Netherlands
GRUNDFOS Netherlands
Veluwezoom 35
1326 AE Almere
Postbus 22015
1302 CA ALMERE
Tel.: +31-88-478 6336
Fax: +31-88-478 6332
E-mail: info_gnl@grundfos.com

New Zealand
GRUNDFOS Pumps NZ Ltd.
17 Beatrice Tinsley Crescent
North Harbour Industrial Estate
Albany, Auckland
Tel.: +64-9-415 3240
Fax: +64-9-415 3250

Norway
GRUNDFOS Pumper A/S
Strømsveien 344
Postboks 235, Leirdal
N-1011 Oslo
Tel.: +47-22 90 47 00
Fax: +47-22 32 21 50

Poland
GRUNDFOS Pompy Sp. z o.o.
ul. Klonowa 23
Baranowo k. Poznania
PL-62-081 Przeźmierowo
Tel.: (+48-61) 650 13 00
Fax: (+48-61) 650 13 50

Portugal
Bombas GRUNDFOS Portugal, S.A.
Rua Calvet de Magalhães, 241
Apartado 1079
P-2770-153 Paço de Arcos
Tel.: +351-21-440 76 00
Fax: +351-21-440 76 90

Romania
GRUNDFOS Pompe România SRL
S-PARK BUSINESS CENTER, Clădirea A2, etaj 2
Str. Tipografilor, Nr. 11-15, Sector 1, Cod 013714
Bucuresti, Romania
Tel.: 004 021 2004 100
E-mail: romania@grundfos.ro

Serbia
Grundfos Srbija d.o.o.
Omladinskih brigada 90b
11070 Novi Beograd
Tel.: +381 11 2258 740
Fax: +381 11 2281 769
www.rs.grundfos.com

Singapore
GRUNDFOS (Singapore) Pte. Ltd.
25 Jalan Tukang
Singapore 619264
Tel.: +65-6681 9688
Faxax: +65-6681 9689

Slovakia
GRUNDFOS s.r.o.
Prievozská 4D 821 09 BRATISLAVA
Tel.: +421 2 5020 1426
sk.grundfos.com

Slovenia
GRUNDFOS LJUBLJANA, d.o.o.
Leskoškova 9e, 1122 Ljubljana
Tel.: +386 (0) 1 568 06 10
Fax: +386 (0)1 568 06 19
E-mail: tehnika-si@grundfos.com

South Africa
GRUNDFOS (PTY) LTD
16 Lascelles Drive, Meadowbrook Estate
1609 Germiston, Johannesburg
Tel.: (+27) 10 248 6000
Fax: (+27) 10 248 6002
E-mail: lgradidge@grundfos.com

Spain
Bombas GRUNDFOS España S.A.
Camino de la Fuentecilla, s/n
E-28110 Algete (Madrid)
Tel.: +34-91-848 8800
Fax: +34-91-628 0465

Sweden
GRUNDFOS AB
Box 333 (Lunnagårdsgatan 6)
431 24 Mölndal
Tel.: +46 31 332 23 000
Fax: +46 31 331 94 60

Switzerland
GRUNDFOS Pumpen AG
Bruggacherstrasse 10
CH-8117 Fällanden/ZH
Tel.: +41-44-806 8111
Fax: +41-44-806 8115

Taiwan
GRUNDFOS Pumps (Taiwan) Ltd.
7 Floor, 219 Min-Chuan Road
Taichung, Taiwan, R.O.C.
Tel.: +886-4-2305 0868
Fax: +886-4-2305 0878

Thailand
GRUNDFOS (Thailand) Ltd.
92 Chaloem Phrakiat Rama 9 Road
Dokmai, Pravej, Bangkok 10250
Tel.: +66-2-725 8999
Fax: +66-2-725 8998

Turkey
GRUNDFOS POMPA San. ve Tic. Ltd. Sti.
Gebze Organize Sanayi Bölgesi
Ihsan dede Caddesi
2. yol 200. Sokak No. 204
41490 Gebze/ Kocaeli
Tel.: +90 - 262-679 7979
Fax: +90 - 262-679 7905
E-mail: satis@grundfos.com

Ukraine
ТОВ "ГРУНДФОС УКРАЇНА"
Бізнес Центр Європа
Столичне шосе, 103
м. Київ, 03131, Україна
Tel.: (+38 044) 237 04 00
Fax: (+38 044) 237 04 01
E-mail: ukraine@grundfos.com

United Arab Emirates
GRUNDFOS Gulf Distribution
P.O. Box 16768
Jebel Ali Free Zone, Dubai
Tel.: +971 4 8815 166
Fax: +971 4 8815 136

United Kingdom
GRUNDFOS Pumps Ltd.
Grovebury Road
Leighton Buzzard/Beds. LU7 4TL
Tel.: +44-1525-850000
Fax: +44-1525-850011

U.S.A.
Global Headquarters for WU
856 Koomey Road
Brookshire, Texas 77423 USA
Phone: +1-630-236-5500

Uzbekistan
Grundfos Tashkent, Uzbekistan
The Representative Office of Grundfos Kazakhstan in Uzbekistan
38a, Oybek street, Tashkent
Tel.: (+998) 71 150 3290 / 71 150 3291
Fax: (+998) 71 150 3292

Trademarks displayed in this material, including but not limited to Grundfos and the Grundfos logo, are registered trademarks owned by The Grundfos Group. © 2025 Grundfos Holding A/S, all rights reserved.

97771615 **03.2025**

ECM: 1418584