MULTILIFT

Lifting stations
50 Hz

GRUNDFOS

Table of contents

1. Product overview . . . 3
MULTILIFT, one-pump lifting stations . . . 3
MULTILIFT, double-pump lifting stations . . . 3
MULTILIFT, large lifting stations . . . 4
Applications . . . 5
Approvals . . . 6
Functions . . . 6
Performance range . . . 7

2. Installation requirements . . . 8

3. Drain capacity . . . 9
General operating information . . . 9
Sizing MULTILIFT lifting stations . . . 11

4. MULTILIFT MSS . . . 12
Applications . . . 12
Sizing guide . . . 13
Construction . . . 14
Product description . . . 15
Technical data . . . 16
Performance curves . . . 17
Dimensional drawings . . . 18
Accessories . . . 19

5. MULTILIFT M . . . 21
Applications . . . 21
Sizing guide . . . 22
Construction . . . 24
Product description . . . 25
Technical data . . . 26
Performance curves . . . 28
Dimensional drawings . . . 29
Accessories . . . 30

6. MULTILIFT MOG . . . 32
Applications . . . 32
Sizing guide . . . 33
Construction . . . 35
Product description . . . 36
Technical data . . . 37
Performance curves . . . 39
Dimensional drawings . . . 40
Accessories . . . 41

7. MULTILIFT MD . . . 43
Applications . . . 43
Sizing guide . . . 44
Construction . . . 46
Product description . . . 47
Technical data . . . 48
Performance curves . . . 50
Dimensional drawings . . . 51
Accessories . . . 52

8. MULTILIFT MLD . . . 54
Applications . . . 54
Sizing guide . . . 55
Construction . . . 57
Product description . . . 58
Technical data . . . 59
Performance curves . . . 61
Dimensional drawings . . . 62
Accessories . . . 63

9. MULTILIFT MDG . . . 65
Applications . . . 65
Sizing guide . . . 66
Construction . . . 68
Product description . . . 69
Technical data . . . 70
Performance curves . . . 72
Dimensional drawings . . . 73
Accessories . . . 74

10. MULTILIFT MD1, MDV . . . 77
Applications . . . 77
Sizing guide . . . 78
Construction . . . 82
Product description . . . 83
Technical data . . . 85
Mechanical, electrical and order data . . . 86
Performance curves . . . 90
Dimensional drawings . . . 94
Accessories . . . 96

11. Controllers . . . 99
LC 220 controller . . . 99
LC 231, LC 241 Level controller . . . 100

12. Grundfos Product Center . . . 101

1. Product overview

MULTILIFT, one-pump lifting stations

MULTILIFT MSS	Description	Technical data	
TM050436	Compact lifting station for one-family houses **Features:** • basic controller with multiple functions • built-in non-return flap valve • 5 inlets, DN 100 • piezoresistive level sensor.	Tank capacity: H_{max}: Q_{max}: P1: Outlet connection: Main inlet levels:	44 l up to 10.8 m up to 32 m^3/h 1.8 kW DN 100 180 and 250 mm

MULTILIFT M	Description	Technical data	
TM050428	Compact lifting station for one-family houses **Features:** • controller with interactive menu and multiple functions • built-in non-return flap valve • patented, eccentric inlet disk for stepless inlet level adjustment, DN 100, optional DN 150 • piezoresistive level sensor.	Tank capacity: H_{max}: Q_{max}: P1: Outlet connection: Main inlet levels:	92 l up to 20.5 m up to 60 m^3/h 1.9 - 4.6 kW DN 100 180-315 mm

MULTILIFT MOG	Description	Technical data	
TM050434	Compact lifting station for one-family houses **Features:** • built-in SEG grinder pump • controller with interactive menu and multiple functions • built-in non-return flap valve • patented, eccentric inlet disk for stepless inlet level adjustment, DN 100, optional DN 150 • piezoresistive level sensor.	Tank capacity: H_{max}: Q_{max}: P1: Outlet connection: Main inlet levels:	93 l up to 46 m up to 17 m^3/h 1.4 - 5.2 kW DN 32 180-315 mm

MULTILIFT, double-pump lifting stations

MULTILIFT MD	Description	Technical data	
TM050430	Compact lifting station for multifamily houses **Features:** • controller with interactive menu and multiple functions • built-in non-return flap valve • patented, eccentric inlet disk for stepless inlet level adjustment, DN 100, optional DN 150 • piezoresistive level sensor.	Tank capacity: H_{max}: Q_{max}: P1: Outlet connection: Main inlet levels:	130 l up to 20.5 m up to 60 m^3/h 1.9 - 4.6 kW DN 100 180-315 mm

MULTILIFT MLD	Description	Technical data	
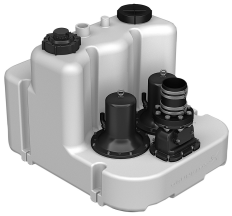 TM050432	Compact lifting station for multifamily houses **Features:** • controller with interactive menu and multiple functions • built-in non-return flap valve. • large-volume collecting tank, 270 litres.	Tank capacity: H_{max}: Q_{max}: P1: Outlet connection: Main inlet level: Inlet connection:	270 l up to 20.5 m up to 60 m^3/h 1.9 - 4.6 kW DN 100 560 mm vertical

MULTILIFT MDG	Description	Technical data	
TM085547	Compact lifting station for multifamily houses **Features:** • built-in double SEG grinder pumps • controller with interactive menu and multiple functions • built-in non-return flap valve • patented, eccentric inlet disk for stepless inlet level adjustment.	Tank capacity: H_{max}: Q_{max}: P1: Outlet connection: Main inlet levels:	93 l up to 46 m up to 17 m^3/h 1.4 - 5.2 kW DN 32 180-315 mm

MULTILIFT, large lifting stations

MULTILIFT MD1, MDV		Technical data	
TM044897	Compact lifting station for large buildings **Features:** • highly reliable SE or SL pumps • controller with interactive menu and multiple functions • large-volume collecting capacity, • up to 3 × 450 litres.	Tank capacity: H_{max}: Q_{max}: P1: Outlet connection: Main inlet level:	up to 3 × 450 l up to 45 m up to 230 m^3/h 2.8 / 12 / 12.6 kW DN 80, DN 100, DN 150 700 mm

Applications

Description

MULTILIFT lifting stations are all-in-one solutions designed for the collection and pumping of domestic wastewater from selected sanitary appliances. These appliances may be in a single room, a complete floor or an entire building of any size, from a one-family house up to a huge shopping mall. MULTILIFT lifting stations come in many versions of different size and performance.

Most versions come complete and pre-assembled, which enables quick and low-cost installation.

Lifting stations are designed to be placed inside a building, and their outlet pipes are to be connected to the wastewater collecting lines of the building.

The MULTILIFT unit consist of these main components:

Gas-, odour- and pressure-tight tank, wastewater pump in service friendly, dry installation outside the tank, level sensor, controller and non-return valve.

In spite of the compact design and the dry-installed pumps, lifting stations are able to handle a large amount of domestic wastewater.

MULTILIFT lifting stations are mainly installed in basements situated below the municipal sewer system outside the building. In those cases, the wastewater must be pumped up above the backflow level. Depending on local regulations, this is normally the street level.

Lifting stations are the only safe system to ensure uninterrupted, sustained discharge of wastewater from basements into sewer lines which may be overloaded, for example, by heavy rainfall.

The application overview below shows typical installation sites for MULTILIFT lifting stations.

Application overview

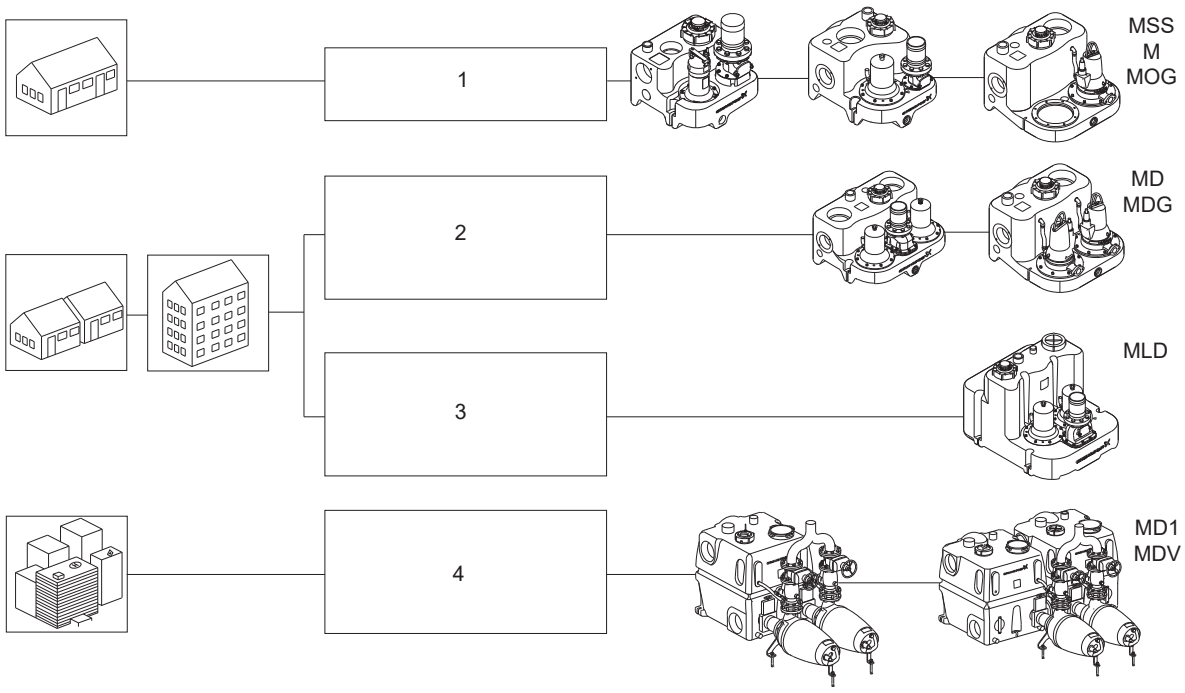

Pos.	Description
1	One-family houses and installations that do not require a backup pump.
2	Two-family and multifamily houses, small commercial buildings, offices, schools, restaurants and small hotels
3	Commercial buildings, offices, schools, hotels, hospitals and restaurants
4	Multifamily houses, large public buildings (hospitals and schools), large commercial buildings (shopping centres), government buildings and industrial buildings.

Approvals

Description	Marking
The MULTILIFT products are CE-marked and have obtained the following approvals: • LGA/TÜV • EAC.	CE EAC

Functions

Description

MULTILIFT lifting stations collect wastewater in a tank to discharge it up to the sewer system. The liquid level in the tank is measured continuously and is controlled and monitored by specially designed controllers. The pumps are started and stopped according to the liquid level in the tank.

In double-pump lifting stations, the pumps start alternately to achieve even distribution of operating hours. Automatic pump changeover ensures uninterrupted wastewater transport in case of fault in one pump. In case the inflow exceeds the performance of one pump, the second pump will also be started, and the two pumps will run in parallel to lower the liquid level in the tank.

The motor protection is provided by a thermal switch in the motor winding, a current measurement, a motor circuit breaker (depending on type) and a runtime protection. Under normal conditions and depending on duty point and tank size, the runtime of a MULTILIFT lifting station is 3-60 seconds.

The outlet pipe is either DN 80 or DN 100.

Grundfos high quality requirements ensure high robustness and long and trouble-free operation. The production is inspected by an external institute according to EN 12050-1.

The individual MULTILIFT products are described in the following sections:

- *MULTILIFT MSS*
- *MULTILIFT M*
- *MULTILIFT MOG*
- *MULTILIFT MD*
- *MULTILIFT MLD*
- *MULTILIFT MDG*
- *MULTILIFT MD1, MDV*.

TM072077

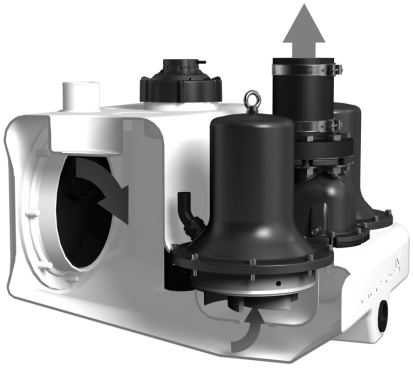

TM051775

Performance range

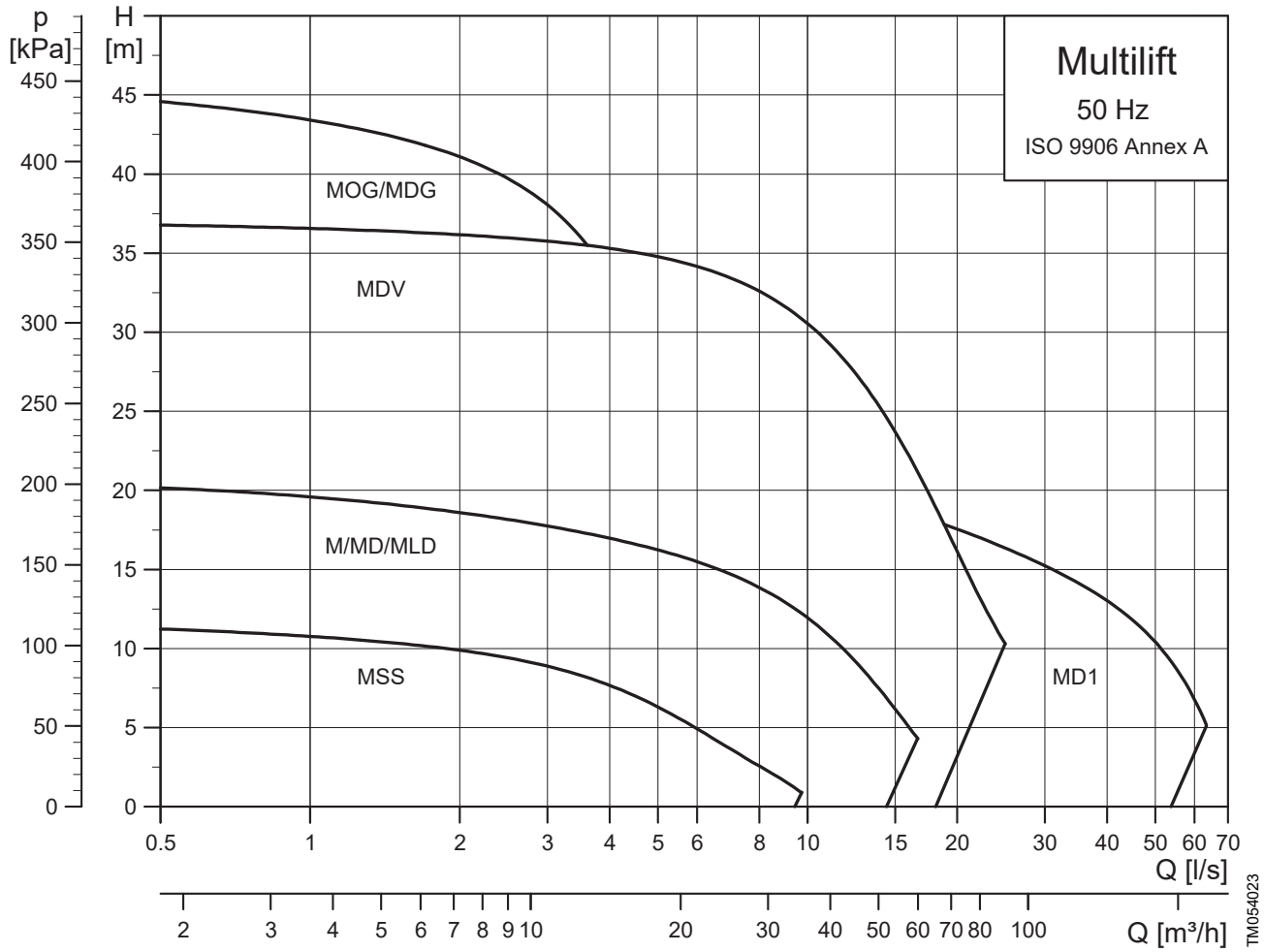

2. Installation requirements

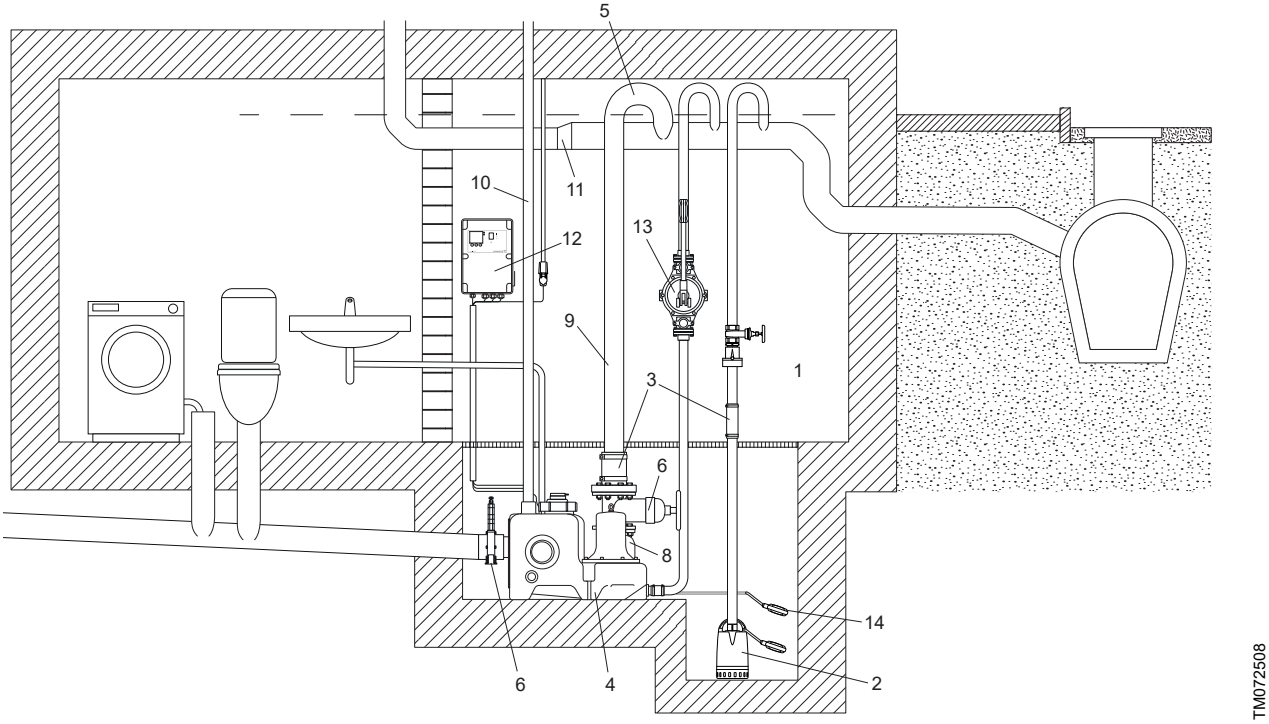

Installation example of a MULTILIFT lifting station

Correct installation of a lifting station according to EN 12056-4 requires compliance with the following instructions: (Figures refer to position numbers in the figure above).

1. Installation in a properly illuminated and vented room with 60 cm free space for all parts to be serviced and operated.
2. A pump pit must be provided for the drainage of the room. If a lifting station is installed in a basement with the risk of penetrating groundwater, we recommend (and in certain countries it is required) that you install a drainage pump in a separate pump sump below floor level. If no pumps are installed, an additional float switch (14) connected to the LC 220, LC 231 or LC 241 controller can provide an alarm.
3. All pipe connections must be flexible and reduce resonance.
4. Lifting stations must be secured against uplift and twist.
5. All outlet pipes (lifting station, diaphragm pump and drainage pump) must have a bend above the local backwater level. The highest point of the goose neck/ reversed water seal must be above street level.
6. For outlet pipes, DN 80 and upwards, install an isolating valve in the outlet pipe. Also provide an isolating valve in the inlet line.
7. Surface water must not be discharged into the lifting station inside the building. It should have its own pumping station outside the building. (Not shown in drawing).
8. Lifting stations must be provided with an approved non-return valve according to EN 12050-4.
9. The volume of the outlet pipe above the non-return valve up to the backwater level must be smaller than the effective tank volume.
10. In general, a lifting station for black wastewater must be vented above roof level. It is permitted to lead the ventilation, as a secondary ventilation, into the main ventilation. Special venting valves (accessory) must be placed outside the building.
11. If the wastewater is discharged into a collecting line, this collecting line must have a filling ratio of at least h/d = 0.7. The collecting line must be at least one nominal diameter bigger after the outlet pipe connection.
12. The controller of the lifting station must be placed in a flood-safe place and be equipped with an alarm.
13. Use a diaphragm pump for simple, manual draining of the collecting tank in case of pump failure (not obligatory).
14. An additional float switch can be connected to the alarm input for extra safety.

Local and regional regulations and standards must be checked and followed.

3. Drain capacity

General operating information

The flow of wastewater is uneven when seen over a period of time, for instance an hour or a day.

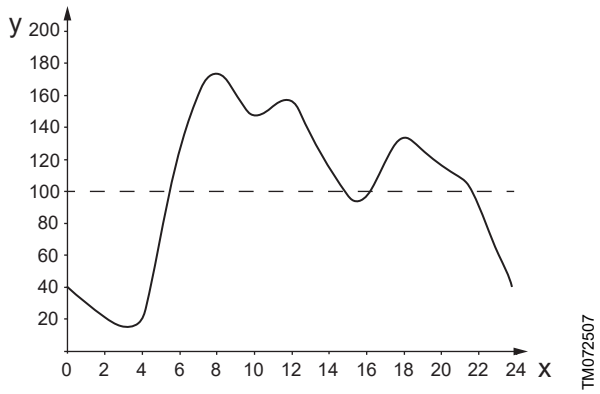

Uneven wastewater inflow

Pos.	Description
X	Hours (t) [h]
Y	Wastewater flow (Q) [%]

The above diagram shows the typical wastewater flow from a building over a day.

In the morning, around lunch time and in the evening, the water consumption and accordingly the wastewater flow is higher than average.

The pump(s) must be able to handle the peak flow for a certain, rather short, period when several sanitary appliances are used same time.

To be able to select the right tank size, it is important to know the wastewater flow from all connected sanitary appliances over one hour [l/h].

Intermittent operation of the unit and the pump(s) caused by the uneven inflow and the motor design must be taken into consideration.

The motors used for MULTILIFT lifting stations are designed for intermittent duty. This means they can run for a certain period and then need a pause for a certain period in order to avoid overheating and switch off by the motor protection.

MULTILIFT pumps are designed for intermittent duty (S3) with the designation S3 in x % to 1 minute, for example, S3 50 %, 1 minute. This means that an operating cycle is 1 minute and within this cycle the pumps can operate 50 % = 30 seconds and then need 30 seconds pause.

This can be repeated 60 times per hour, meaning that one pump can empty the lifting station tank up to 60 times per hour.

This, and not the performance of the individual pump, determines the total drain capacity of a lifting station.

The tables below illustrate that the maximum drain capacity over one hour depends on the effective tank volume and the selected inlet level.

Lifting station	Peak flow performance [1]			Max. effective tank volume [l]	Max. drain capacity [2] [l/h] = Max. inflow	
	DN 40 [l/s]	DN 80 [l/s]	DN 100 [l/s]		With 1 pump running [3]	With 2 pumps running
MULTILIFT MSS	N/A	3.5 - 8	5.6 - 8	28	1,680	N/A
MULTILIFT M	N/A	3.5 - 16	5.6 - 16	62	3,720	N/A
MULTILIFT MOG	0.5 - 4.5	N/A	N/A	50	3,000	N/A
MULTILIFT MD	N/A	3.5 - 16	5.6 - 16	86	5,160	10,320
MULTILIFT MLD	N/A	3.5 - 16	5.6 - 16	190	11,400	22,800
MULTILIFT MDG	0.5 - 4.5	N/A	N/A	50	3,000	6,000
MULTILIFT MD1/MDV	N/A	3.5 - 18	5.6 - 28	240-720	14,400	28,800

1) Depending on the duty point with one-pump operation.

2) Conditions: uneven inflow, values are independent of the duty point and valid for the highest starting level.

3) Recommended values for sizing of double-pump stations to secure 100 % backup.

Lifting station	Max. number of pump starts per hour	Effective tank volume [l] depending on inlet pipe level and related pump start level				Max. drain capacity [4] [l/h] = max. inflow [l/h] depending on inlet pipe level and related pump start level			
		180 mm	250 mm	315 mm	560/750 mm	180 mm	250 mm	315 mm	560/750 mm
MULTILIFT MSS	40	20	28	N/A	N/A	800	1,120	N/A	N/A
MULTILIFT M	40	34	49	62	N/A	1,360	1,960	2,480	N/A
MULTILIFT MOG	40	23	37	50	N/A	920	1,480	2,000	N/A
MULTILIFT MD	60	49	69	86	N/A	2,940	4,140	5,160	N/A
MULTILIFT MDG	60	23	37	50	N/A	1,380	2,220	3,000	N/A
MULTILIFT MLD	60	N/A	N/A	N/A	190	N/A	N/A	N/A	11,400
MULTILIFT MD1/MDV, 1 tank	60	N/A	N/A	N/A	240	N/A	N/A	N/A	14,400
MULTILIFT MD1/MDV, 2 tanks	60	N/A	N/A	N/A	480	N/A	N/A	N/A	28,800
MULTILIFT MD1/MDV, 3 tanks	60	N/A	N/A	N/A	720	N/A	N/A	N/A	43,200

4) Uneven inflow, values are independent of duty point, for double-pump stations, only one pump included to secure backup.

Note: The values in the tables above always represent the maximum performance of one pump. This even applies to double-pump lifting stations as pump 2 is provided as backup and replacement in case of malfunction in pump 1.

Rainwater drain pipes must not be connected to lifting stations. Only MULTILIFT MD1 and MDV lifting stations equipped with Grundfos SE pumps designed for continuous operation in dry installation are able to handle uncontrollable wastewater inflow.

Sizing MULTILIFT lifting stations

Sizing of a MULTILIFT lifting station is done in two steps:

1. Determine the required pump performance.
   Make sure that the pump can handle the peak flow when several sanitary appliances connected are used the same time and drained into the lifting station. Knowledge of the required pump performance enables selection of pump size as all MULTILIFT lifting stations, except MULTILIFT MSS, come with a range of six or more motor sizes, making it possible to select a MULTILIFT tailored to the specific need of the building.
2. Determine the required tank size.
   The MULTILIFT range includes different tank sizes to enable best possible adaptation of the lifting station to the individual need. As appears from the tables above, the tank size with related effective tank volume determines how much wastewater can be handled in one hour or in one day.

For both sizing steps it is essential to know which and how many sanitary appliances are connected to the lifting station and if perhaps further devices, as for instance a grease separator, are also connected to the lifting station.

The calculation of the inflow parameters must take the different regulations and standards in each country into consideration. For assistance, ask your Grundfos sales representative.

4. MULTILIFT MSS

MULTILIFT MSS is designed according to EN 12050-1 and approved by an external institute. It is supplied complete and ready to install with non-return valve.

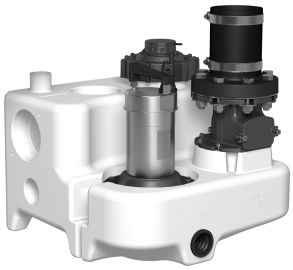

TM072504

MULTILIFT MSS

Applications

MULTILIFT MSS is an extremely compact and reliable lifting station with easy-to-operate controller for pumping of domestic wastewater (with faeces) in one-family houses or holiday cottages.

MULTILIFT MSS is typically used for the following:

- basement installation below sewer level
- renovation or modernisation of existing buildings, for example, developing basements with fitness room, sauna, bath and washroom.
  - direct connection of wall-hung or floor-standing toilets with horizontal outlet according to EN 33/EN 37.

TM051773

Example of installation of MULTILIFT MSS behind a floor-standing toilet

Sizing guide

The table below shows the sizing guide with maximum length of vertical and horizontal pipes depending on the internal pipe diameter and the duty point. The non-return valve, an isolating valve and four bends have been taken into account. The limit of use is based on the self cleaning velocity of 0.7 m/s. Normal length of pipework in one-family houses or similar buildings is approximately 5 to 15 m.

	Max. pipe length of vertical and horizontal outlet pipes						
Q [l/s]	**3.5** [5]	**4.5**	**5.5** [6]	**6**	**7**		
6 m	-	-	-	-	-	DN 100	MSS.11.3.4
	28	-	-	-	-	DN 80	
5 m	-	32	-	-	-	DN 100	MSS.11.3.4
	141	-	-	-	-	DN 80	
	-	-	-	-	-	DN 100	MSS.11.1.4
	75	-	-	-	-	DN 80	
4 m	-	246	-	-	-	DN 100	MSS.11.3.4
	253	69	-	-	-	DN 80	
	-	-	-	-	-	DN 100	MSS.11.1.4
	187	-	-	-	-	DN 80	
3 m	-	461	125	30	-	DN 100	MSS.11.3.4
	366	140	32	-	-	DN 80	
	-	-	-	-	-	DN 100	MSS.11.1.4
	300	-	-	-	-	DN 80	
2 m	-	675	269	151	4	DN 100	MSS.11.3.4
	479	211	81	42	-	DN 80	
	-	49	-	-	-	DN 100	MSS.11.1.4
	413	6	-	-	-	DN 80	
1 m	-	889	413	272	93	DN 100	MSS.11.3.4
	592	282	129	83	25	DN 80	
	-	264	-	-	-	DN 100	MSS.11.1.4
	526	77	-	-	-	DN 80	

5) Required min. flow for v = 0.7 m/s at DN 80

6) Required min. flow for v = 0.7 m/s at DN 100

Construction

MULTILIFT MSS

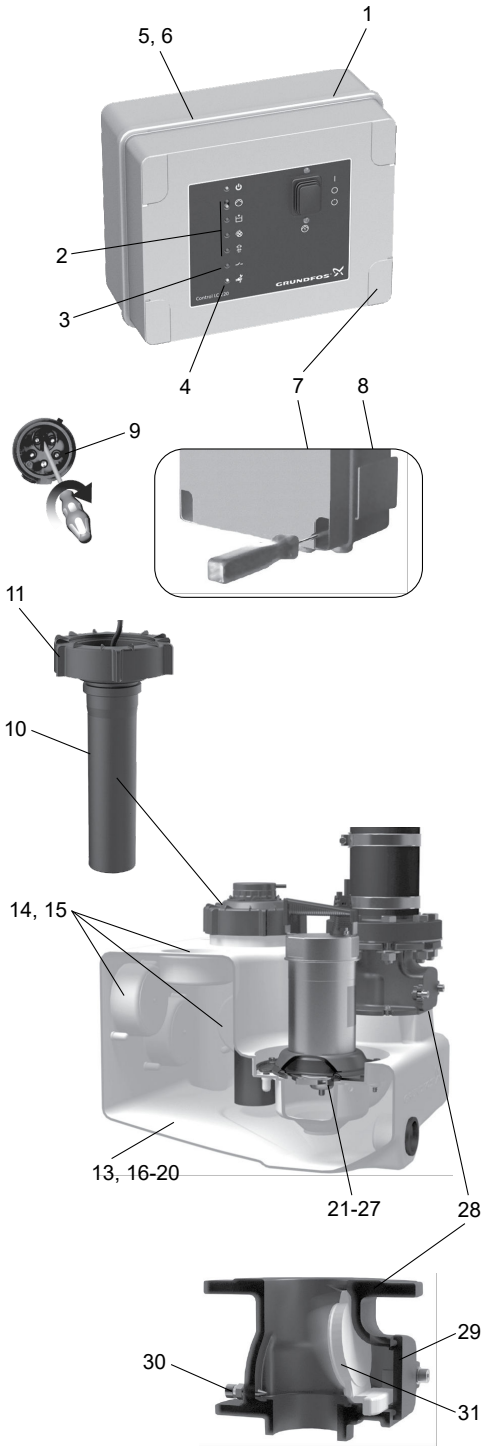

Description

Pos.	Controller
1	Pre-assembled and ready to operate with all necessary presettings - only the inlet level needs to be set.
2	Operating, pump status and fault indications, such as high-water level, phase sequence fault and wrong sensor signal
3	External level alarm can be used, for example, to monitor the installation room or well around the lifting station with separate float switch outside the tank to detect groundwater intake, water pipe burst or other flooding accidents; no extra alarm device needed.
4	Maintenance/service reminder (once a year)
5	Potential-free contact for common alarm (inside)
6	Connection of PC Tool for further information and adjustments (inside) - operating hours and start frequency of pump and failure log
7	Quick and easy installation of the controller to the wall without the need of opening the cabinet
8	Holder for quick guide
9	Phase inverter for easy changing of phases (only three-phase versions)
Pos.	**Level sensor**
10	No moving parts in pumped liquid. Blockage-free pressure tube, DN 100, connected via a pressure hose to piezoresistive pressure sensor in the controller
11	Screw cap for pressure tube fixation and tank inspection cover enabling easy maintenance of pressure tube and inspection of collecting tank
Pos.	**Collecting tank**
13	Design and volume adapted to one-family house applications
14	Possible to connect inlets from all directions and to connect floor-standing and wall-hung toilets; ideal for replacement and new installation
15	Footprint of only 0.26 m^2 and recessed sockets for space saving installation
16	Wastewater-resistant and odour-free polyethylene (PE) tank with strong walls
17	Sedimentation-free tank bottom with chamfers, leading the wastewater to the pump to reduce the need of cleaning the tank
18	Pressure-tight design up to 5 m water column according to EN 12050-1
19	Suitable for liquid temperature up to 50 °C
20	Easy handling during transportation and installation
Pos.	**Pump**
21	Submersible stainless steel pump design - well-proven for wastewater applications over a decade
22	Vortex impeller made of stainless steel, for trouble-free operation and unchanged performance throughout the entire life of the pump
23	Steep pump curve; one motor size for high and low pump heads
24	Double motor protection with built-in thermal switch and thermal motor circuit breaker
25	Quick and easy maintenance and service due to clamp fixation
26	Mechanical shaft seal (SIC/SIC) and a chamber filled with non toxic oil to ensure reliable, long service life
27	Self-venting pump housing due to hydraulic design
Pos.	**Non-return valve DN 80**
28	Designed and approved according to EN 12050-4
29	Compact design with large and well accessible inspection cover for taking out foreign bodies, if necessary
30	Lifting device to drain outlet pipe in case of service or maintenance
31	Smooth and silent flap valve

Product description

Features

- Complete, pre-assembled and ready to install
- easy to handle, light-weight, 28 kg
- easy-to-operate LC 220 controller with setting of inlet level, safety functions and separate alarm indications for easy fault diagnostics.
- reliable, blockage-free level detection with no direct contact to the pumped liquid
- easy and smart maintenance and service features for pump, sensor tube, collecting tank and controller
- seven different inlet connections on all sides offer maximum installation flexibility.

Related information

Construction

LC 220 controller

Scope of delivery

Grundfos MULTILIFT MSS lifting stations are supplied complete with collecting tank, one single- or three-phase pump, level sensor, non-return valve (depending on type) and LC 220 controller. Both sensor and pump are connected to the controller with 4 or 10 m cable and hose.

An accessories bag containing the following items is also included:

- 1 × installation and operating instructions
- 1 × outlet adapter flange, DN 80, with connecting piece, DN 100 (outer diameter, 110 mm)
- 1 × flexible hose, DN 100, and two clamps to connect the outlet pipe
- 1 × flexible hose, DN 50, and two clamps to connect the vent pipe
- 2 × screw and expansion anchor for tank fixation
- 1 × socket seal, DN 100
- 1 × socket seal, DN 50, for diaphragm pump, 1 1/2" connection or inlet, DN 50
- 1 × gasket kit, DN 80, 8 bolts M16, nuts and washers (galvanised).

Type key

Example: MSS.11.3.2

Code	Designation	Explanation
M	MULTILIFT lifting station	Type range
SS	One pump	Number of pumps
11	Power [W]	Output power, P_2 / 100 [W]
1	Singe-phase motor	Number of phases
3	Three-phase motor	
2	2-pole motor	Number of poles
4	4-pole motor	

Collecting tank

The gas-, odour- and pressure-tight collecting tank is made of wastewater-resistant polyethylene (PE) and has all necessary ports for the connection of inlet pipes, outlet pipe, vent pipe and a manually operated diaphragm pump, which is available as an accessory.

The tank volume and effective volume (volume between start and stop) of the collecting tank appear from the following table:

Inlet level [mm]	Total tank volume [l]	Effective tank volume [l]
180	44	20
250		28

Setting to the relevant inlet level can be made via a DIP switch on the operating panel of the controller. The factory-set inlet level is 250 mm above the floor.

Pump

The impeller of the submersible stainless-steel pump is designed as a free-flow Vortex impeller ensuring almost unchanged performance throughout the entire life of the pump. All parts in contact with the pumped liquid are made of stainless steel. The pump has a mechanical shaft seal and an oil chamber in between.

Single-phase motors have run capacitors.

Single- and three-phase motors are protected by a thermal switch in the windings and an additional thermal circuit breaker to cut out the motor in case of overload. If the motor is overloaded, it stops automatically. When it has cooled to normal operating temperature, it restarts automatically when automatic reset is set in the controller (factory setting).

In case of high inflow, the pump can start 40 times per hour. The start and stop sequence must correspond to intermittent duty S3-10 %, 1 minute.

Related information

Electrical data

LC 220 controller

Technical data

General data

Parameter	Value
Free passage	50 mm
Liquid temperature	Max. 40 °C For short periods up to 60 °C (max. 5 minutes per hour)
Ambient temperature	0-40 °C
pH-value	4-10
Max. density of pumped liquid	1,100 kg/m^3
Enclosure class (lifting station and motor)	IP68 (2 m water column for 7 days)
Enclosure class (controller)	IP55
Insulation class (motor)	F (155 °C)
Voltage (motor)	1 × 230 V 3 × 400 V
Frequency (motor)	50 Hz
Potential-free contact	NO/NC, max. 250 VAC / 2 A
Voltage (sensor)	12 V
Signal output (sensor)	0-5 V
Power consumption (controller)	2 W
Number of starts per hour	Max. 60
Sound pressure level	< 70 dB(A)
Dimensions (controller)	Height = 195 mm Width = 250 mm Depth = 110 mm

Related information

Dimensional drawings

Material specification

Component	Material
Collecting tank	Polyethylene (PE)
Pump housing	Stainless steel 1.4301
Impeller	Stainless steel 1.4301
Pump shaft	Stainless steel 1.4301
Mechanical shaft seal	Silicon carbide/silicon carbide, NBR rubber, stainless steel 1.4301
Motor	Stainless steel 1.4401
Control cabinet	Acrylonitrile butadiene styrene (ABS)
Screws	Stainless steel 1.4301
O-rings	NBR rubber
Cable	Neoprene

Mechanical data and order data

MULTILIFT	Inlet level [mm]	Tank volume [l]	Effective tank volume [l]	Weight [kg]	Plug type	Length of power cable [m]	Cable length between controller and motor/sensor [m]	Product number
MSS.11.1.2	180 / 250	44	20 / 28	28	IEC E&F, CEE7/7 (Schuko)	1.5	4	97901037
MSS.11.1.2					IEC Type I (China)	1.5	4	98714827
MSS.11.1.2					-	-	4	99440517
MSS.11.3.2					CEE 3P+N+E, 16A	1.5	4	97901027
MSS.11.3.2					CEE 3P+N+E, 16A (China)		4	98714824

Electrical data

MULTILIFT	Duty	Voltage [V] [7)]	Power P1 / P2 [kW]	$I_{1/1}$ / I_{start} [A]	rpm [min^{-1}]	Number of poles	Starting method
MSS.11.1.2	S3-10 %, 1 min.	1 × 230 V	1.8 / 1.1	8 / 22.5	2760	2	DOL
MSS.11.3.2		3 × 400 V		3.2 / 16	2785		

7) Tolerance: -15 % / +10 %

Performance curves

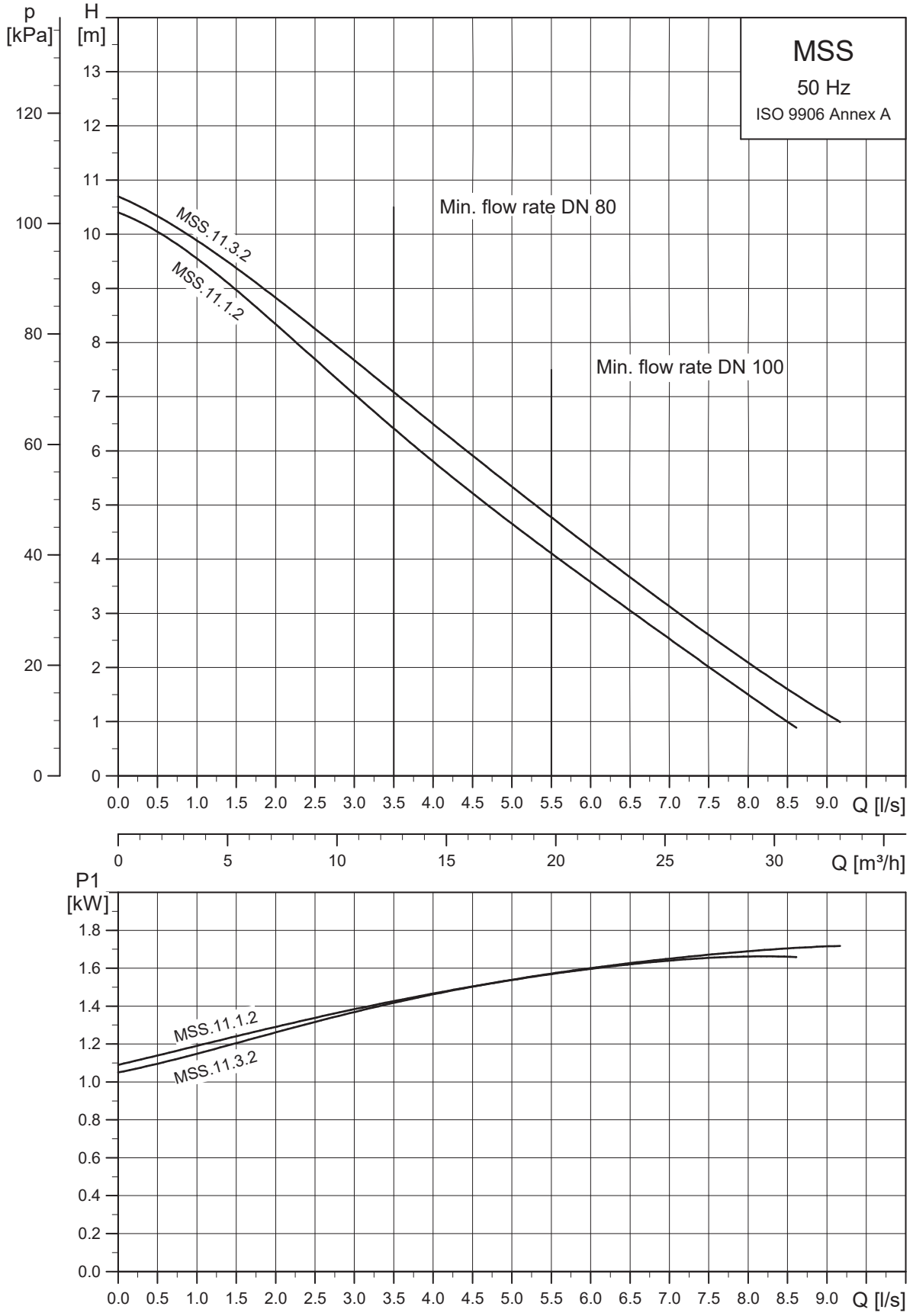

Dimensional drawings

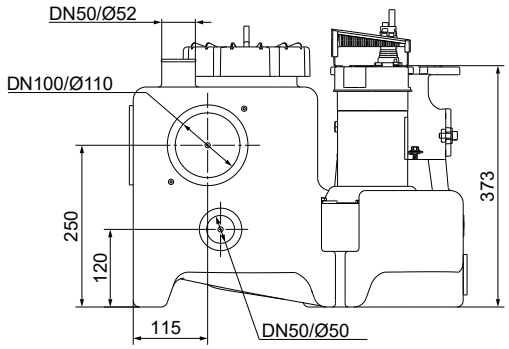

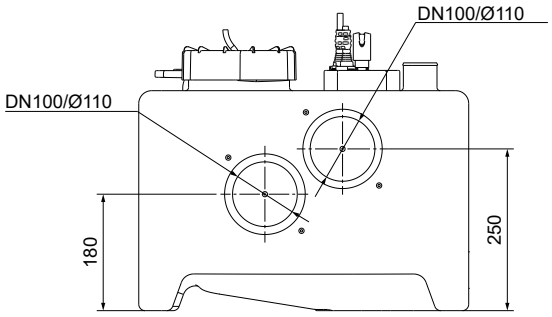

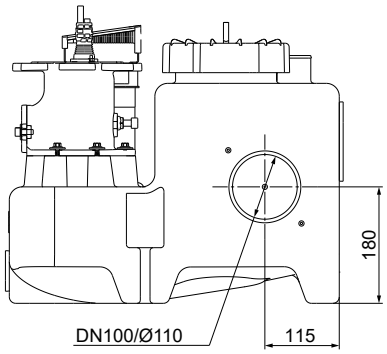

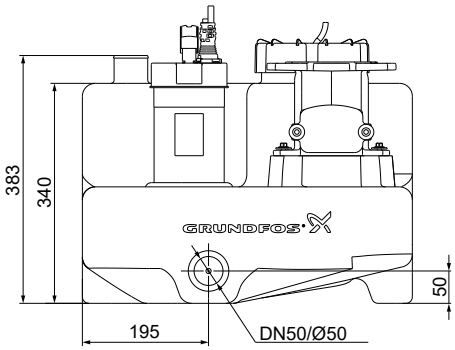

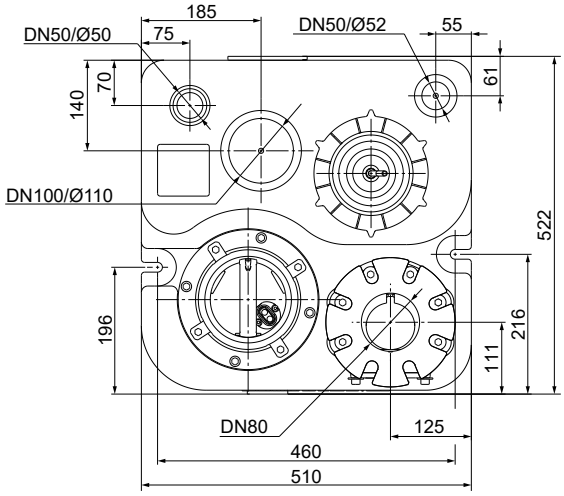

TM085604

Accessories

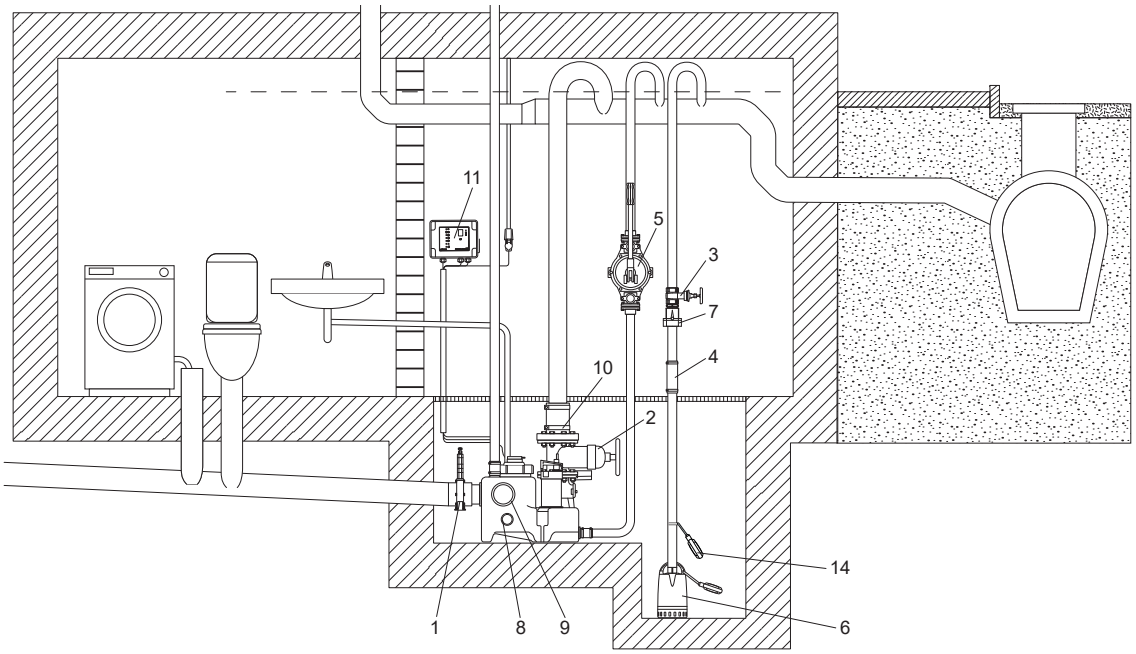

Accessories for MULTILIFT MSS

Pos.	Figure	Description	Dimensions	Product number
1	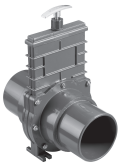	Isolating valve, PVC	DN 100 Installation length: 130 mm Height: 375 mm Connecting piece: ∅110	96615831
2		Isolating valve, epoxy-coated cast iron	DN 80 Installation length: 180 mm Height: 444 mm Connection: flange PN 10	96002011
3		Isolating valve, brass	DN 32 Installation length: 76 mm Connection: Rp 1 1/4"	00ID0918
4		Flexible connection with clamps for additional connections and inlets	DN 32 Length: 150 mm Internal ∅42	91071645
5		Manually operated diaphragm pump	Installation length: 435 mm Width: 234 mm Connection: Rp 1 1/2" Pumped volume per cycle: 0.65 litre Maximum suction lift: 4 m Maximum pump head: 20 m	96003721
6	For wastewater pump, for example, UNILIFT CC and KP, see data booklet for the pump or Grundfos Product Center.			
7		Non-return flap valve, composite	Length: 90 mm Height: 90 mm Connection: Rp 1 1/4"	96005308
8		Socket seal for additional standard inlet	DN 100, internal ∅110	97726942

Pos.	Figure	Description	Dimensions	Product number
9		Socket seal for additional inlet	DN 50, internal ∅48-50	98079669
10		Bolts, nuts, 8 of each, (galvanised) Gasket	M16 × 65 mm DN 80	96001999
N/A		Hole saw	∅43 mm × 33 mm	99865001
			∅102 mm × 38 mm	96571536
			∅153 mm × 38 mm	99865057
11		Battery buffer for alarm in case of mains failure (battery is not included). Only the battery connection is in scope of delivery. Replace the battery once a year.	Use a commercially available 9 V battery.	98079684
12		Signal lamp for wall mounting	1 × 230 V, 50 Hz	91077209
13		Signal horn	Indoors, 1 × 230 V, 50 Hz	62500021
			Outdoors, 1 × 230 V, 50 Hz	62500022
14		Level switch type SAS	Cable length 5 m, 250 V	00ID7805
N/A		External main switch for supply cable	Up to 25 A	96002511
N/A		Vent valve (with filter)	DN 70/80/100	98059596
N/A	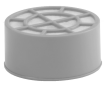	Filter kit for vent valve	DN 70/80/100	98059594
N/A		Wall installation box for vent valve	204 × 204 × 130 mm	98059598
N/A	-	Pressure hose for sensor, as a replacement	30 m 8 × 1.25 mm	98403665

5. MULTILIFT M

MULTILIFT M is designed according to EN 12050-1 and approved by an external institute. It is supplied complete and ready to install with non-return valve.

TM085531

MULTILIFT M

Applications

MULTILIFT M is a compact and reliable lifting station with easy-to-operate controller for pumping of domestic wastewater (with faeces) in one-family houses or light commercial applications.

MULTILIFT M is typically used for the following:

- basement installation below sewer level
- renovation or modernisation of existing buildings, for example, developing basements with fitness room, sauna, bath and washroom.
  - direct connection of wall-hung or floor-standing toilets with horizontal outlet according to EN 33/EN 37.

TM051772

Example of installation of MULTILIFT M in a pit in the building's basement

Sizing guide

The table below shows the sizing guide with maximum length of vertical and horizontal pipes depending on the internal pipe diameter and the duty point. The non-return valve, an isolating valve and four bends have been taken into account. The limit of use is based on the self cleaning velocity of 0.7 m/s. Normal length of pipework in one-family houses or similar buildings is approximately 5 to 15 m.

	Max. pipe length of vertical and horizontal outlet pipes									
Q [l/s]	**3.5** [8)]	**5.5** [9)]	**6.5**	**8**	**9**	**10**	**12**	**14**		
15 m	-	-	-	-	-	-	-	-	DN 100	M.38
	83	-	-	-	-	-	-	-	DN 80	
13 m	-	98	-	-	-	-	-	-	DN 100	M.38
	308	17	-	-	-	-	-	-	DN 80	
	-	-	-	-	-	-	-	-	DN 100	M.32
	118	-	-	-	-	-	-	-	DN 80	
11 m	-	385	150	90	21	-	-	-	DN 100	M.38
	534	113	37	18	-	-	-	-	DN 80	
	-	122	-	-	-	-	-	-	DN 100	M.32
	344	26	-	-	-	-	-	-	DN 80	
9 m	-	673	357	227	130	52	-	-	DN 100	M.38
	759	210	107	66	34	8	-	-	DN 80	
	-	410	160	98	18	40	-	-	DN 100	M.32
	569	123	41	22	-	-	-	-	DN 80	
	-	-	-	-	-	-	-	-	DN 100	M.24
	186	-	-	-	-	-	-	-	DN 80	
7 m	-	960	563	364	238	140	16	8	DN 100	M.38
	985	306	178	113	72	39	-	-	DN 80	
	-	697	367	235	127	49	-	-	DN 100	M.32
	795	219	112	70	34	8	-	-	DN 80	
	-	219	-	-	-	-	-	-	DN 100	M.24
	411	61	-	-	-	-	-	-	DN 80	
	-	63	-	-	-	-	-	-	DN 100	M.22
	129	9	-	-	-	-	-	-	DN 80	
5 m	-	1247	770	501	347	229	78	54	DN 100	M.38
	1211	403	248	161	110	71	20	12	DN 80	
	-	984	573	372	235	137	17	9	DN 100	M.32
	1021	316	182	117	72	39	-	-	DN 80	
	-	506	195	122	31	-	-	-	DN 100	M.24
	637	157	56	33	3	-	-	-	DN 80	
	-	350	207	130	86	54	15	7	DN 100	M.22
	354	106	60	36	21	11	-	-	DN 80	
	-	114	27	12	-	-	-	-	DN 100	M.15
	189	27	-	-	-	-	-	-	DN 80	
	-	63	5	-	-	-	-	-	DN 100	M.12
	115	10	-	-	-	-	-	-	DN 80	

Max. pipe length of vertical and horizontal outlet pipes										
Q [l/s]	**3.5** [8]	**5.5** [9]	**6.5**	**8**	**9**	**10**	**12**	**14**		
3 m	-	1534	976	638	456	317	140	100	DN 100	M.38
	1436	499	318	209	148	102	43	30	DN 80	
	-	1271	780	509	344	226	79	55	DN 100	M.32
	1246	412	253	165	110	71	22	14	DN 80	
	-	793	401	259	140	61	-	-	DN 100	M.24
	863	254	126	80	41	15	-	-	DN 80	
	-	638	414	267	194	143	77	54	DN 100	M.22
	580	202	130	83	59	43	21	14	DN 80	
	-	402	234	149	95	54	-	-	DN 100	M.15
	415	124	70	43	26	12	-	-	DN 80	
	-	350	212	97	48	13	-	-	DN 100	M.12
	341	107	63	26	10	-	-	-	DN 80	
2 m	-	1677	1078	706	509	360	209	122	DN 100	M.38
	1548	547	353	231	166	117	66	37	DN 80	
	-	1414	882	576	397	269	146	77	DN 100	M.32
	1358	459	287	188	128	86	45	22	DN 80	
	-	936	504	326	193	104	36	2	DN 100	M.24
	974	301	160	103	59	29	7	-	DN 80	
	-	780	516	335	248	186	116	76	DN 100	M.22
	692	249	165	106	78	57	35	21	DN 80	
	-	544	336	216	149	97	47	18	DN 100	M.15
	527	171	104	66	44	27	11	-	DN 80	
	-	493	314	165	101	56	-	-	DN 100	M.12
	453	154	97	49	28	13	-	-	DN 80	

[8] Required min. flow for v = 0.7 m/s at DN 80

[9] Required min. flow for v = 0.7 m/s at DN 100

Construction

MULTILIFT M

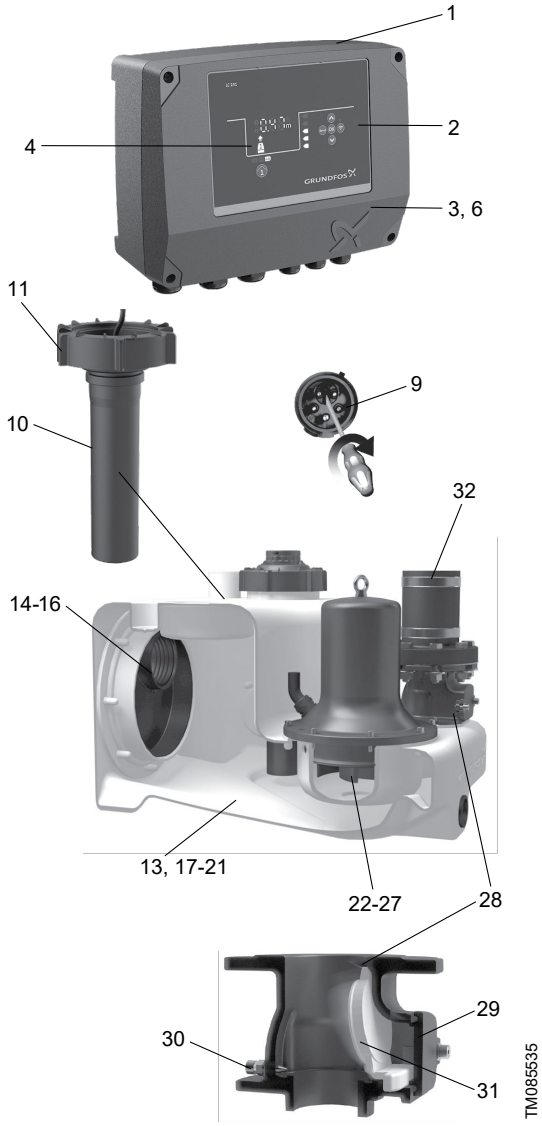

Description	
Pos.	**Controller**
1	Pre-assembled and ready to operate with all necessary presettings - only the inlet level needs to be set.
2	Controller with LED display, multiple motor protection features and further safety options
3	Potential-free contact for common alarm (inside)
4	External alarm can be used, for example, to monitor the installation room or well around the lifting station with separate float switch outside the tank to detect groundwater intake, water pipe burst or other flooding accidents; no extra alarm device needed.
6	Connection of Grundfos GO for further information and adjustments
9	Phase inverter for easy changing of phases (only three-phase versions)
Pos.	**Level sensor**
10	No moving parts in pumped liquid. Blockage-free pressure tube connected via a pressure hose to the pressure sensor in the controller.
11	Screw cap for pressure tube fixation and tank inspection cover enabling easy maintenance of pressure tube and inspection of collecting tank
Pos.	**Collecting tank**
13	Design and volume adapted to one-family house applications
14	Possible to connect inlets from all directions and to connect floor-standing and wall-hung toilets; ideal for replacement and new installation
15	Unique, patented inlet disk, DN 100 (DN 150 as accessory), for stepless adjustment to inlet levels from 180 to 315 mm
16	Socket sealing for space saving installation
17	Wastewater-resistant and odour-free, seamless collecting tank made of polyethylene (PE) with strong walls
18	Sedimentation-free tank bottom with chamfers, leading the wastewater to the pump to reduce the need of cleaning the tank
19	Pressure-tight design up to 5 m water column according to EN 12050-1
20	Suitable for liquid temperature up to 50 °C
21	Easy handling during transportation and installation
Pos.	**Pump**
22	Six motor sizes adapted to all application needs, up to 21 m head and 50 m^3 flow
23	Vortex impeller with large free passage for trouble-free operation and unchanged performance throughout the entire life of the pump
24	Motor protection with built-in thermal switch
25	Highly reliable motor design with up to 60 starts an hour for handling peak inflow conditions
26	Triple shaft seal and a chamber filled with non-toxic oil to ensure reliable, long service life
27	Self-venting pump housing due to hydraulic design
Pos.	**Non-return valve DN 80**
28	Designed and approved according to EN 12050-4
29	Compact design with large and well accessible inspection cover for taking out foreign bodies, if necessary
30	Lifting device to drain outlet pipe in case of service or maintenance
31	Smooth and silent flap valve
Pos.	**Outlet**
32	Flexible and sound-absorbing outlet connection DN 100

Product description

Features

- Complete, pre-assembled and ready to install
- patented, turnable inlet disk enabling flexible connections from 180 to 315 mm inlet levels - ideal for new installations and replacements
- seven different inlet connections on all sides offer maximum installation flexibility
- six different motor sizes for perfect adjustment to the required draining performance
- easy-to-operate LC 231 controller with outstanding motor protection and additional safety and service functions.
- reliable, blockage-free level detection with no direct contact to the pumped liquid
- easy and smart maintenance and service features for pump, sensor tube, collecting tank and controller.

Related information

Construction

LC 231, LC 241 Level controller

Scope of delivery

Grundfos MULTILIFT M (one pump) and MD (two pumps) lifting stations are supplied complete with collecting tank, non-return valves, a sensor unit with cable and one or two pumps with cable, both connected to the level controller. The controller includes a power cable with plug.

An accessories bag containing the following items is also included:

- 1 × installation and operating instructions
- 1 × outlet adapter flange, DN 80, with connecting piece, DN 100 (outer diameter, 110 mm)
- 1 × flexible hose, DN 100, and two clamps to connect the outlet pipe
- 1 × flexible hose, DN 70, and two clamps to connect the vent pipe
- 2 × screw and expansion anchor for tank fixation
- 3 × screw and washer for fastening a pipe plug in the inlet disk, if required
- 1 × socket seal, DN 100
- 1 × socket seal, DN 50, for diaphragm pump connection or inlet, DN 50
- 1 × gasket kit, DN 80, 4 bolts M16, nuts and washers (galvanised).

Type key

Example: MLD.22.3.4

Code	Designation	Explanation
M	MULTILIFT lifting station	Type range
[ ]	Standard tank	Tank size
L	Large tank	
[ ]	One pump	Number of pumps
D	Two pumps	
OG	One grinder pump	
DG	Two grinder pumps	
22	Power [W]	Output power, P_2 / 100 [W]
1	Singe-phase motor	Number of phases
3	Three-phase motor	
2	2-pole motor	Number of poles
4	4-pole motor	

Collecting tank

The gas-, odour- and pressure-tight collecting tank is made of wastewater-resistant polyethylene (PE) and has all necessary ports for the connection of inlet pipes, outlet pipe, vent pipe and a manually operated diaphragm pump, which is available as an accessory.

The main inlet on the rear side of the collecting tank is designed as a turnable disk, DN 100 (optional DN 150), adjustable to any inlet level between 180 and 315 mm.

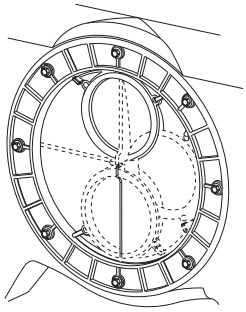

TM073993

Main inlet with eccentric disk

The tank volume and effective volume (volume between start and stop) of the collecting tank appear from the following table:

Inlet level [mm]	Total tank volume [l]	Effective tank volume [l]
180	130	49
250		69
315		86

Setting to the relevant inlet level must be made via the operating panel of the controller.

Pump

The composite impeller of the submersible cast-iron pump is designed as a free-flow Vortex impeller, ensuring almost unchanged performance throughout the entire life of the pump. The pump has three shaft seals with an oil chamber filled for life with non-toxic oil.

Single-phase motors are protected by a thermal switch in the windings and run via a capacitor inside the controller cabinet. Three-phase motors are protected by a thermal switch in the windings and an additional thermal circuit breaker in the controller cabinet.

If the motor is overloaded, it stops automatically. When it has cooled to normal operating temperature, it restarts automatically when automatic reset is set in the controller (factory setting).

In case of high inflow, the pump can start 40 times per hour. The start and stop sequence must correspond to intermittent duty.

Related information

Electrical data

LC 231, LC 241 Level controller

Technical data

General data

Parameter	Value
Free passage	50 mm
Liquid temperature	Max. 40 °C For short periods up to 60 °C (max. 5 minutes per hour)
Ambient temperature	0-40 °C
pH-value	4-10
Max. density of pumped liquid	1,100 kg/m^3
Enclosure class (lifting station and motor)	IP68 (2 m water column for 7 days)
Enclosure class (controller)	IP55
Insulation class (motor)	F (155 °C)
Voltage (motor)	1 × 230 V 3 × 230 V 3 × 400 V
Frequency (motor)	50 Hz
Potential-free contacts	NO/NC, max. 250 VAC / 2 A
Voltage (sensor)	12 V
Signal output (sensor)	0-5 V
Power consumption (controller)	2 W
Number of starts per hour	Max. 60
Sound pressure level	< 70 dB(A)
Dimensions (controller)	Height = 390 mm Width = 262 mm Depth = 142 mm

Related information

Dimensional drawings

Material specification

Component	Material
Collecting tank	Polyethylene (PE)
Pump housing	Cast iron
Impeller	Luranyl
Shaft	Stainless steel 1.4301
Shaft seal	NBR
Control cabinet	Acrylonitrile butadiene styrene (ABS)
Screws	Stainless steel 1.4301
O-rings	NBR rubber
Cable	Neoprene

Mechanical data and order data

MULTILIFT	Inlet level [mm]	Tank volume [l]	Effective tank volume [l]	Weight [kg]	Plug type	Cable length between plug and controller [m]	Cable length between motor and controller [m]	Product number
M.12.1.4	180/250/315	92	34/49/62	68	IEC E&F, CEE7/7 (Schuko)	1.5	4	97901064
M.12.1.4				68	-	-	4	99440520
M.12.3.4				66	CEE 3P+N+E, 16A	1.5	4	97901065
M.15.1.4				68	IEC E&F, CEE7/7 (Schuko)			97901066
M.15.1.4				68	-	-	4	99440533
M.15.3.4				66	CEE 3P+N+E, 16A	1.5	4	97901067
M.22.3.4				69	CEE 3P+E 16A			97901069
M.22.3.4				69	CEE 3P+N+E, 16A			97901068
M.24.3.2				72	CEE 3P+E 16A			97901071
M.24.3.2				72	CEE 3P+N+E, 16A			97901070
M.32.3.2				72	CEE 3P+E 16A			97901073
M.32.3.2				72	CEE 3P+N+E, 16A			97901072
M.38.3.2				72	CEE 3P+E 16A			97901075
M.38.3.2				72	CEE 3P+N+E, 16A			97901074
M.12.1.4	180/250/315	92	34/49/62	70	IEC E&F, CEE7/7 (Schuko)	1.5	10	97901076
M.12.3.4				68	CEE 3P+N+E, 16A			97901077
M.15.1.4				70	IEC E&F, CEE7/7 (Schuko)			97901078
M.15.3.4				68	CEE 3P+N+E, 16A			97901079
M.22.3.4				71	CEE 3P+N+E, 16A			97901080
M.24.3.2				74	CEE 3P+N+E, 16A			97901081
M.32.3.2				74	CEE 3P+N+E, 16A			97901082
M.38.3.2				74	CEE 3P+N+E, 16A			97901083

Electrical data

MULTILIFT	Duty	Voltage [V] [10)]	Power P1 / P2 [kW]	$I_{1/1}$ / I_{start} [A]	rpm [min^{-1}]	Number of poles	Starting method
M.12.1.4	S3-50 %, 1 min.	1 × 230 V	1.9 / 1.4	9 / 39	1430	4	DOL
M.12.3.4		3 × 400 V	1.8 / 1.5	3.6 / 19			
M.15.1.4		1 × 230 V	2.2 / 1.6	10.1 / 39	1410	4	
M.15.3.4		3 × 400 V	2.1 / 1.7	4.0 / 19			
M.22.3.4	S3-50 %, 1 min.	3 × 230 V	3.0 / 2.5	10.2 / 51.5	1430	4	
M.22.3.4		3 × 400 V		5.5 / 29.7			
M.24.3.2		3 × 230 V	3.1 / 2.7	9.7 / 88.7	2920	2	
M.24.3.2		3 × 400 V		5.5 / 39			
M.32.3.2		3 × 230 V	4.0 / 3.4	88.7	2920	2	
M.32.3.2		3 × 400 V		6.7 / 39			
M.38.3.2	S3-40 %, 1 min.	3 × 230 V	4.6 / 3.8	13 / 88.7	2880	2	
M.38.3.2		3 × 400 V		7.5 / 39			

10) Tolerance: -10 % / +6 %

Performance curves

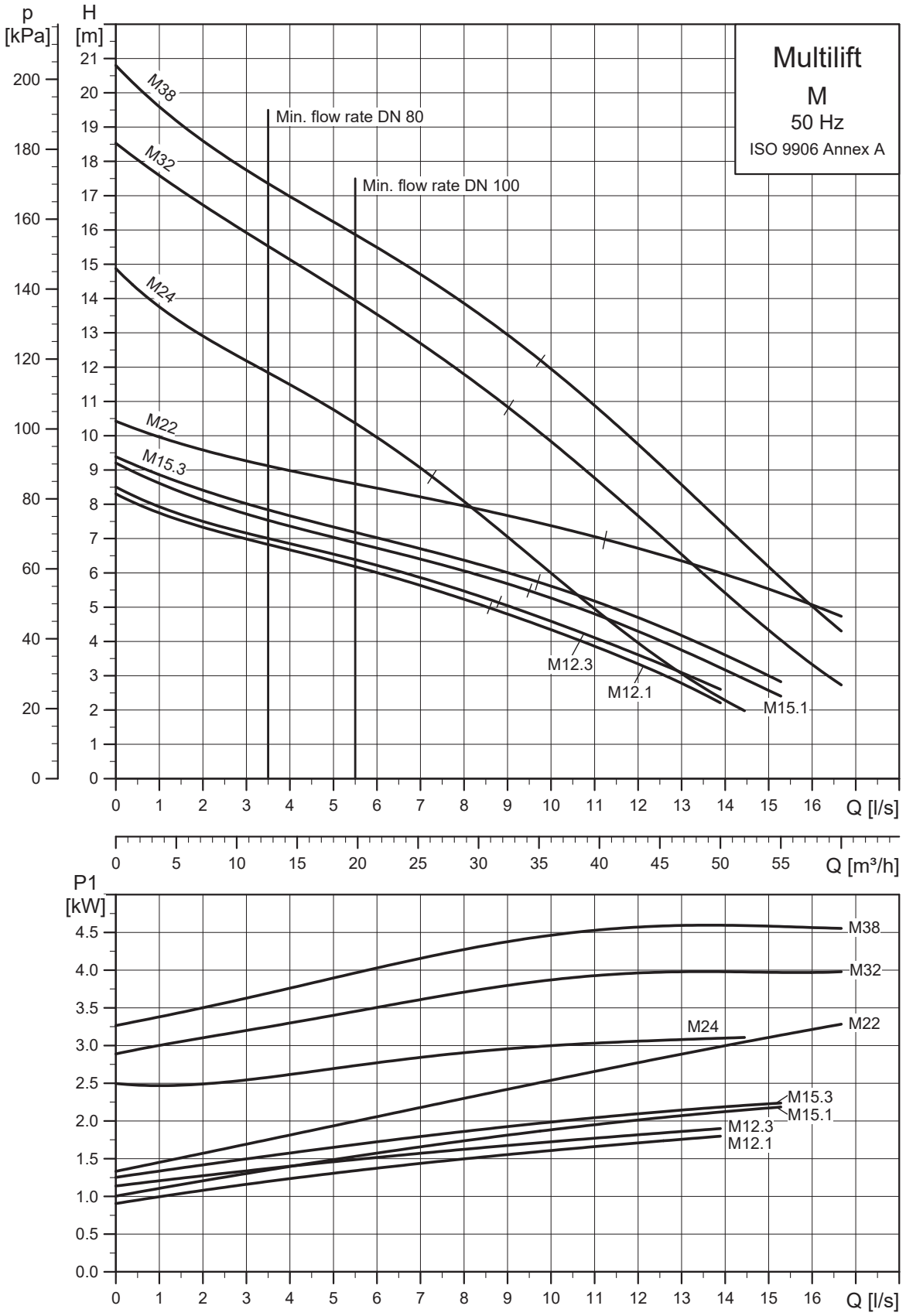

TM051286

Dimensional drawings

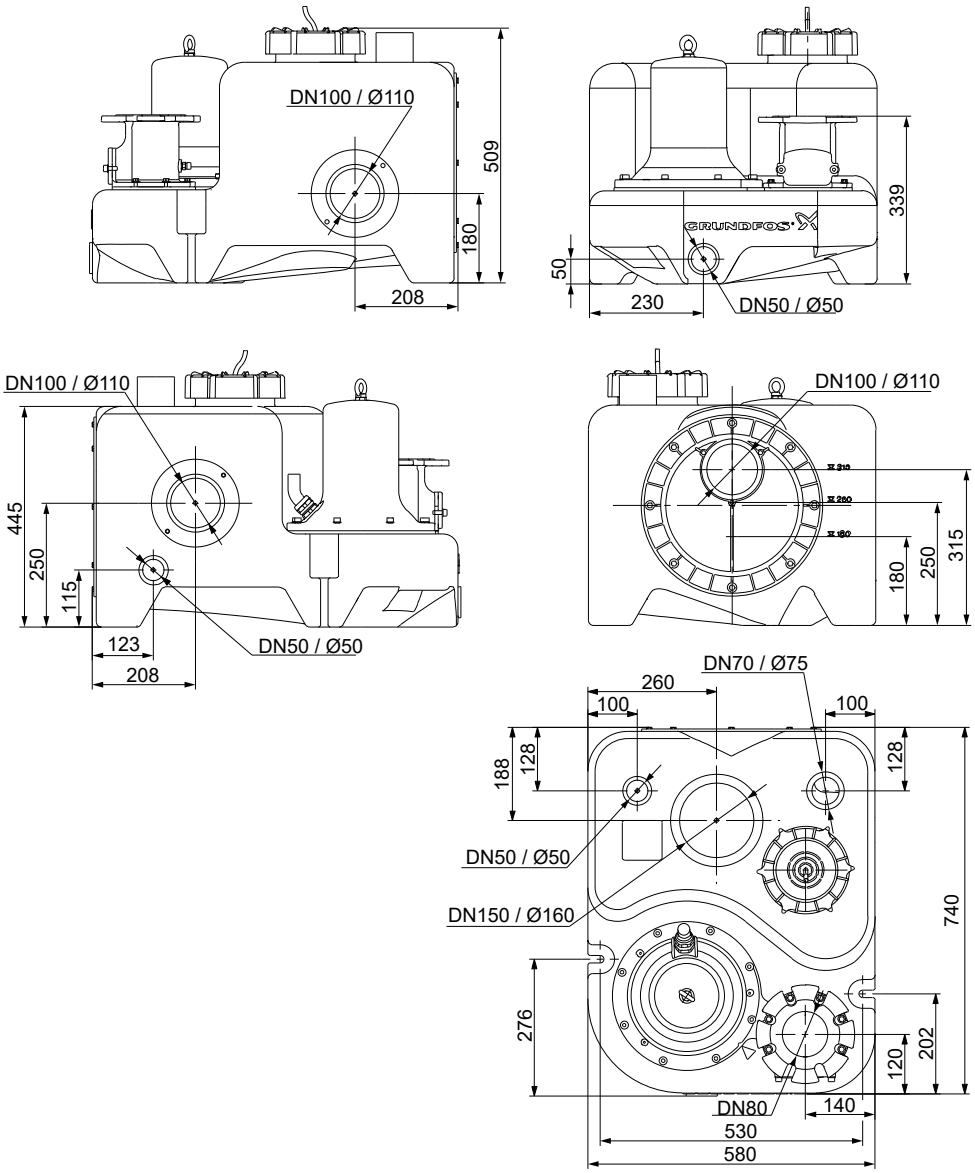

Accessories

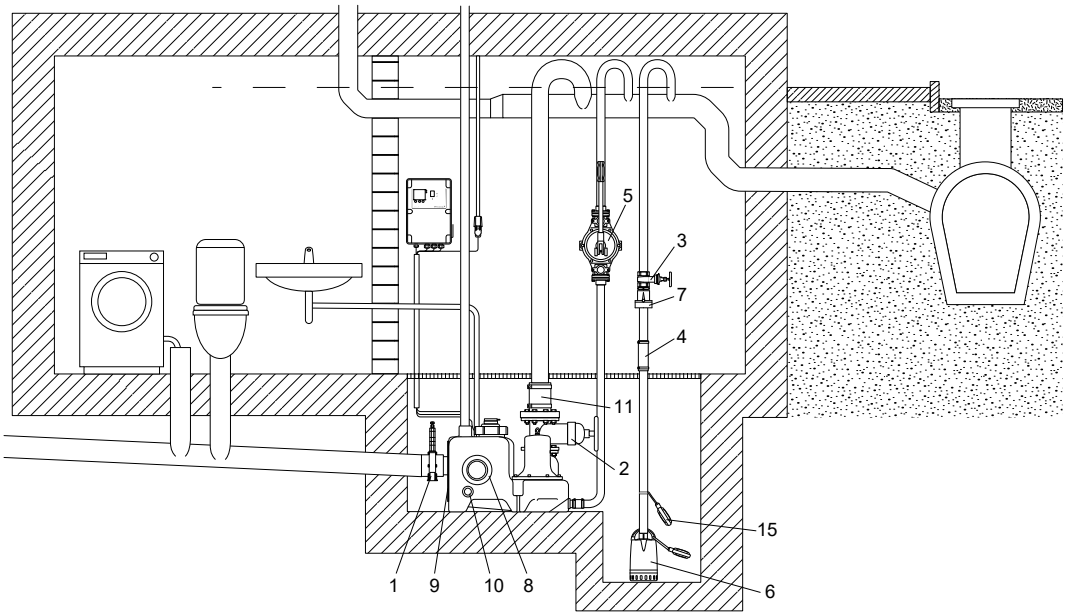

Accessories for MULTILIFT M

Pos.	Figure	Description	Dimensions	Product number
1		Isolating valve, PVC	DN 100 Installation length: 130 mm Height: 375 mm Connecting piece: ∅110	96615831
2		Isolating valve, epoxy-coated cast iron	DN 80 Installation length: 180 mm Height: 300 mm Connection: flange PN 10	96002011
3		Isolating valve, brass	DN 32 Installation length: 76 mm Connection: Rp 1 1/4"	00ID0918
4		Flexible connection with clamps for additional connections and inlets	DN 32 Length: 150 mm Internal ∅42	91071645
5		Manually operated diaphragm pump	Installation length: 435 mm Width: 234 mm Connection: Rp 1 1/2" Pumped volume per cycle: 0.65 litre Maximum suction lift: 4 m Maximum pump head: 20 m	96003721
6	For wastewater pump, for example, UNILIFT CC and KP, see data booklet for the pump or Grundfos Product Center.			
7		Non-return flap valve, composite	Length: 90 mm Height: 90 mm Connection: Rp 1 1/4"	96005308
8		Socket seal for additional standard inlet	DN 100, internal ∅110	97726942
		Socket seal for additional inlet (vertical inlet on top)	DN 150, internal ∅160	96636544

Pos.	Figure	Description	Dimensions	Product number
9	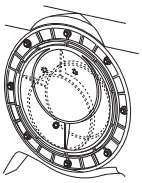	Turnable inlet disk with socket seal for adjustable inlet level	DN 150, internal ∅160	98079681
10		Socket seal for additional inlet	DN 50, internal ∅48-50	98079669
11		Bolts, nuts, 8 of each (galvanised) Gasket	M16 × 65 mm DN 80	96001999
N/A		Hole saw	∅43 mm × 33 mm	99865001
			∅102 mm × 38 mm	96571536
			∅153 mm × 38 mm	99865057
N/A		Signal lamp for wall mounting	1 × 230 V, 50 Hz	91077209
N/A		Signal horn	Indoors, 1 × 230 V, 50 Hz	62500021
			Outdoors, 1 × 230 V, 50 Hz	62500022
15		Level switch type SAS	Cable length 5 m, 250 V	00ID7805
N/A		External main switch for supply cable	Up to 25 A	96002511
N/A		Vent valve (with filter)	DN 70/80/100	98059596
N/A	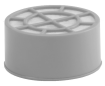	Filter kit for vent valve	DN 70/80/100	98059594
N/A		Wall installation box for vent valve	204 × 204 × 130 mm	98059598
N/A	-	Pressure hose for sensor, as a replacement	30 m 8 × 1.25 mm	98403665

6. MULTILIFT MOG

MULTILIFT MOG is designed according to EN 12050-1 and approved by an external institute. It is supplied complete and ready to install.

MULTILIFT MOG is equipped with a grinder pump (SEG) which is necessary when high heads are required or long distances through a building must be overcome with small pipes.

TM050434

MULTILIFT MOG

Applications

MULTILIFT MOG is a compact and reliable lifting station with easy-to-operate controller for pumping of domestic wastewater (with faeces) in one-family houses, holiday cottages or light commercial applications.

MULTILIFT MOG is typically used for the following:

- basement installation below sewer level
- renovation or modernisation of existing buildings, for example, developing basements with fitness room, sauna, bath and washroom
  - direct connection of wall-hung or floor-standing toilets with horizontal outlet according to EN 33/EN 37.

TM051772

Example of installation of MULTILIFT MOG in a pit in the building's basement

Sizing guide

The table below shows the sizing guide with maximum length of vertical and horizontal pipes depending on the internal pipe diameter and the duty point. The non-return valve, an isolating valve and four bends have been taken into account. The limit of use is based on the self cleaning velocity of 0.7 m/s. Normal length of pipework in one-family houses or similar buildings is approximately 5 to 15 m.

	Max. pipe length of vertical and horizontal outlet pipes						
Q [l/s]	**0.6** [11)]	**0.9** [12)]	**2**	**3**	**4**		
40 m	293	77	-	-	-	DN 40	MOG. 40
	63	-	-	-	-	DN 32	
30 m	1246	506	56	-	-	DN 40	MOG. 40
	373	143	-	-	-	DN 32	
	280	78	-	-	-	DN 40	MOG. 31
	65	3	-	-	-	DN 32	
20 m	2199	935	151	45	9	DN 40	MOG. 40
	683	291	37	2	-	DN 32	
	1233	507	63	4	-	DN 40	MOG. 31
	376	151	7	-	-	DN 32	
	824	323	23	-	-	DN 40	MOG. 26
	246	90	-	-	-	DN 32	
	373	126	-	-	-	DN 40	MOG. 15
	102	26	-	-	-	DN 32	
15 m	2675	1150	198	69	24	DN 40	MOG. 40
	838	364	56	13	-	DN 32	
	1709	722	110	28	-	DN 40	MOG. 31
	531	224	26	-	-	DN 32	
	1301	538	71	10	-	DN 40	MOG. 26
	401	164	13	-	-	DN 32	
	849	341	32	-	-	DN 40	MOG. 15
	257	99	-	-	-	DN 32	
	359	124	-	-	-	DN 40	MOG. 12
	101	28	-	-	-	DN 32	
10 m	3152	1364	245	93	40	DN 40	MOG. 40
	993	438	76	25	7	DN 32	
	2185	936	158	52	16	DN 40	MOG. 31
	686	298	46	10	-	DN 32	
	1777	752	118	34	6	DN 40	MOG. 26
	556	237	32	4	-	DN 32	
	1326	555	79	16	-	DN 40	MOG. 15
	412	173	19	-	-	DN 32	
	836	339	37	-	-	DN 40	MOG. 12
	256	102	5	-	-	DN 32	
	179	47	-	-	-	DN 40	MOG. 09
	47	7	-	-	-	DN 32	

Max. pipe length of vertical and horizontal outlet pipes							
Q [l/s]	**0.6** [11]	**0.9** [12]	**2**	**3**	**4**		
5 m	3628	1579	293	117	56	DN 40	MOG. 40
	1148	511	95	36	15	DN 32	
	2662	1151	205	76	32	DN 40	MOG. 31
	841	371	65	22	7	DN 32	
	2253	967	165	58	22	DN 40	MOG. 26
	711	311	52	16	4	DN 32	
	1802	770	127	40	10	DN 40	MOG. 15
	567	247	39	10	-	DN 32	
	1312	553	85	21	-	DN 40	MOG. 12
	411	176	24	3	-	DN 32	
	655	261	26	-	-	DN 40	MOG. 09
	202	80	4	-	-	DN 32	

11) Required min. flow for v = 0.7 m/s at DN 32

12) Required min. flow for v = 0.7 m/s at DN 40

Construction

MULTILIFT MOG

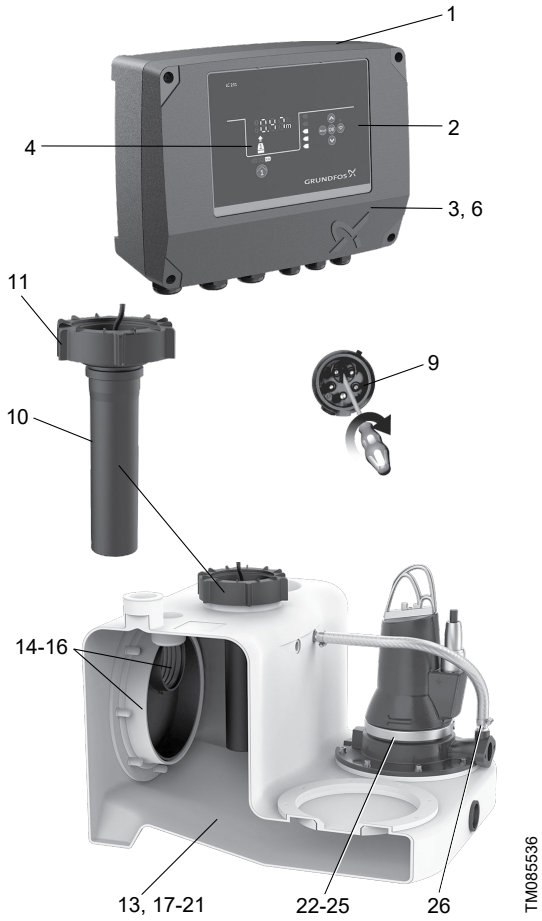

Description

Pos.	Controller
1	Pre-assembled and ready to operate with all necessary presettings - only the inlet level needs to be set.
2	Controller with LED display, multiple motor protection features and further safety options
3	Potential-free contact for common alarm (inside)
4	External alarm can be used, for example, to monitor the installation room or well around the lifting station with separate float switch outside the tank to detect groundwater intake, water pipe burst or other flooding accidents; no extra alarm device needed.
6	Connection of Grundfos GO for further information and adjustments
9	Phase inverter for easy changing of phases (only three-phase versions)
Pos.	**Level sensor**
10	No moving parts in pumped liquid. Blockage-free pressure tube connected via a pressure hose to the pressure sensor in the controller.
11	Screw cap for pressure tube fixation and tank inspection cover enabling easy maintenance of pressure tube and inspection of collecting tank
Pos.	**Collecting tank**
13	Design and volume adapted to one-family house applications
14	Possible to connect inlets from all directions and to connect floor-standing and wall-hung toilets; ideal for replacement and new installation
15	Unique, patented inlet disk, DN 100 (DN 150 as accessory), for stepless adjustment to inlet levels from 180 to 315 mm
16	Socket sealing for space saving installation
17	Wastewater-resistant and odour-free, seamless collecting tank made of polyethylene (PE) with strong walls
18	Sedimentation-free tank bottom with chamfers, leading the wastewater to the pump to reduce the need of cleaning the tank
19	Pressure-tight design up to 5 m water column according to EN 12050-1
20	Suitable for liquid temperature up to 50 °C
21	Easy handling during transportation and installation
Pos.	**Pump**
22	Submersible stainless steel pump with highly reliable grinder system and adjustable, semi-open, radial impeller
23	Clamp solution as a quick-release fastener makes it easy to separate motor from pump housing in case of service or maintenance.
24	Motor protection with built-in thermal switch
25	Mechanical shaft seal in a cartridge for safe and quick replacement and a chamber filled with non-toxic oil to ensure reliable, long service life
26	Self-venting pump housing due to hydraulic design

Product description

Features

- Complete, pre-assembled and ready to install
- patented, turnable inlet disk enabling flexible connections from 180 to 315 mm inlet levels - ideal for new installations and replacements
- seven different inlet connections on all sides offer maximum installation flexibility
- six different motor sizes for perfect adjustment to the required draining performance
- easy-to-operate LC 231 controller with outstanding motor protection and additional safety and service functions.
- highly reliable grinder pump for pressurised operation
- reliable, blockage-free level detection with no direct contact to the pumped liquid
- easy and smart maintenance and service features for pump, sensor tube, collecting tank and controller.

Related information

Construction

LC 231, LC 241 Level controller

Scope of delivery

Grundfos MULTILIFT MOG (one pump) and MULTILIFT MDG (two pumps) lifting stations are supplied complete with collecting tank, a sensor unit with cable and one or two pumps with cable, connected to the level controller. The controller includes a power cable with plug.

An accessories bag containing the following items is also included:

- 1 × installation and operating instructions
- 2 × oval outlet flanges, Rp 1 1/4"
- 1 × flexible hose, DN 70, and two clamps to connect the vent pipe
- 2 × screw and expansion anchor for tank fixation
- 3 × screw and washer for fastening a pipe plug in the inlet disk, if required
- 1 × socket seal, DN 100
- 1 × socket seal, DN 50, for diaphragm pump connection or inlet, DN 50.

Type key

Example: MLD.22.3.4

Code	Designation	Explanation
M	MULTILIFT lifting station	Type range
[ ]	Standard tank	Tank size
L	Large tank	
[ ]	One pump	Number of pumps
D	Two pumps	
OG	One grinder pump	
DG	Two grinder pumps	
22	Power [W]	Output power, P_2 / 100 [W]
1	Singe-phase motor	Number of phases
3	Three-phase motor	
2	2-pole motor	Number of poles
4	4-pole motor	

Collecting tank

The gas-, odour- and pressure-tight collecting tank is made of wastewater-resistant polyethylene (PE) and has all necessary ports for the connection of inlet pipes, outlet pipe, vent pipe and a manually operated diaphragm pump, which is available as an accessory.

The main inlet on the rear side of the collecting tank is designed as a turnable disk, DN 100 (optional DN 150), adjustable to any inlet level between 180 and 315 mm.

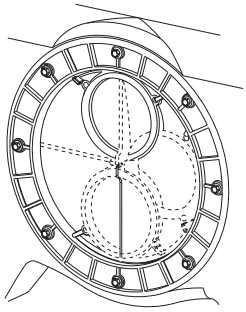

TM073993

Main inlet with eccentric disk

The tank volume and effective volume (volume between start and stop) of the collecting tank appear from the following table:

Inlet level [mm]	Total tank volume [l]	Effective tank volume [l]
180	93	23
250		37
315		50

Setting to the relevant inlet level must be made via the operating panel of the controller. The factory-set inlet level is 250 mm above the floor.

Pump

The submersible cast-iron pumps are equipped with a grinder system made of stainless steel. The semi-open, cast-iron, radial impeller is used in applications requiring a relatively high pressure. The impeller can be adjusted to the pump housing to keep the optimum efficiency.

The pump has a mechanical shaft seal with an oil chamber, filled for life with non-toxic oil. The shaft seal is of the cartridge type, making it possible to replace the shaft seal in the field without using special tools. The clamp securing the motor to the pump housing is made of stainless steel and enables easy dismantling of the motor for service and maintenance.

Single-phase motors are protected by a thermal switch in the windings and run via a capacitor inside the controller cabinet. Three-phase motors are protected by a thermal switch in the windings and an additional thermal circuit breaker in the controller cabinet.

If the motor is overloaded, it stops automatically. When it has cooled to normal operating temperature, it restarts automatically when automatic reset is set at the controller (factory setting).

The cable connection is a plug solution made of stainless steel.

In case of high inflow, the pump can start 40 times per hour. The start and stop sequence must correspond to intermittent duty.

Related information

Electrical data

Electrical data

LC 231, LC 241 Level controller

Technical data

General data

Parameter	Value
Free passage	Grinder
Liquid temperature	Max. 40 °C For short periods up to 60 °C (max. 5 minutes per hour)
Ambient temperature	0-40 °C
pH-value	4-10
Max. density of pumped liquid	1,100 kg/m^3
Enclosure class (lifting station and motor)	IP68 (2 m water column for 7 days)
Enclosure class (controller)	IP55
Insulation class (motor)	F (155 °C)
Voltage (motor)	1 × 230 V 3 × 230 V 3 × 400 V
Frequency (motor)	50 Hz
Potential-free contacts	NO/NC, max. 250 VAC / 2 A
Voltage (sensor)	12 V
Signal output (sensor)	0-5 V
Power consumption (controller)	2 W
Number of starts per hour	Max. 60
Sound pressure level	76 dB(A)
Dimensions (controller)	Height = 390 mm Width = 262 mm Depth = 142 mm

Related information

Dimensional drawings

Material specification

Component	Material
Collecting tank	Polyethylene (PE)
Pump housing	Cast iron
Clamp	Stainless steel
Impeller	Cast iron
Shaft	Stainless steel 1.4301
Shaft seal	Primary seal (0.9 - 1.5 kW): SiC/SiC Secondary seal (0.9 - 1.5 kW): Lip seal, NBR Primary seal (2.6 - 4.0 kW): SiC/SiC Secondary seal (2.6 - 4.0 kW): Carbon/aluminium oxide Other components: NBR rubber, stainless steel
Control cabinet	Acrylonitrile butadiene styrene (ABS)
Screws	Stainless steel 1.4301
O-rings	NBR rubber
Cable	H07RN-F

Mechanical data

MULTILIFT	Inlet level [mm]	Tank volume [l]	Effective tank volume [l]	Weight [kg]	Plug type	Cable length between plug and controller [m]	Cable length between motor and controller [m]	Product number
MOG.09.1.2	180 / 250 / 315	93	23 / 37 / 50	70	IEC E&F, CEE7/7 (Schuko)	1.5	10	97901124
MOG.09.1.2				70	-	-	10	99440536
MOG.09.3.2				70	CEE 3P+N+E, 16A	1.5	10	97901125
MOG.12.1.2				70	IEC E&F, CEE7/7 (Schuko)			97901126
MOG.12.1.2				70	-	-	10	99440537
MOG.12.3.2				70	CEE 3P+N+E, 16A	1.5	10	97901127
MOG.15.3.2				70	CEE 3P+E 16A			97901129
MOG.15.3.2				70	CEE 3P+N+E, 16A			97901128
MOG.26.3.2				89	CEE 3P+E 16A			97901131
MOG.26.3.2				89	CEE 3P+N+E, 16A			97901130
MOG.31.3.2				97	CEE 3P+E 16A			97901133
MOG.31.3.2				97	CEE 3P+N+E, 16A			97901132
MOG.40.3.2				97	CEE 3P+E 16A			97901135
MOG.40.3.2				97	CEE 3P+N+E, 16A			97901134

Electrical data

MULTILIFT	Duty	Voltage [V] [13)]	Power P1 / P2 [kW]	$I_{1/1}$ / I_{start} [A]	rpm [min^{-1}]	Number of poles	Starting method
MOG.09.1.2	S3-35 %	1 × 230 V	1.4 / 0.9	6.3 / 38	2890	2	DOL
MOG.09.3.2		3 × 400 V		2.6 / 21	2860		
MOG.12.1.2		1 × 230 V	1.8 / 1.2	8.2 / 38	2820		
MOG.12.3.2		3 × 400 V		3.1 / 21	2750		
MOG.15.3.2		3 × 230 V	2.3 / 1.5	6.6 / 36	2700		
MOG.15.3.2		3 × 400 V		3.8 / 21	2700		
MOG.26.3.2		3 × 230 V	3.7 / 2.6	9.2 / 57	2870		
MOG.26.3.2		3 × 400 V		5.3 / 33	2870		
MOG.31.3.2	S3-30 %	3 × 230 V	3.9 / 3.1	10.9 / 74	2900		
MOG.31.3.2		3 × 400 V		6.3 / 43	2900		
MOG.40.3.2		3 × 230 V	5.2 / 4.0	14.2 / 74	2830		
MOG.40.3.2		3 × 400 V		8.2 / 43	2830		

13) Tolerance: -10 % / +6 %

Performance curves

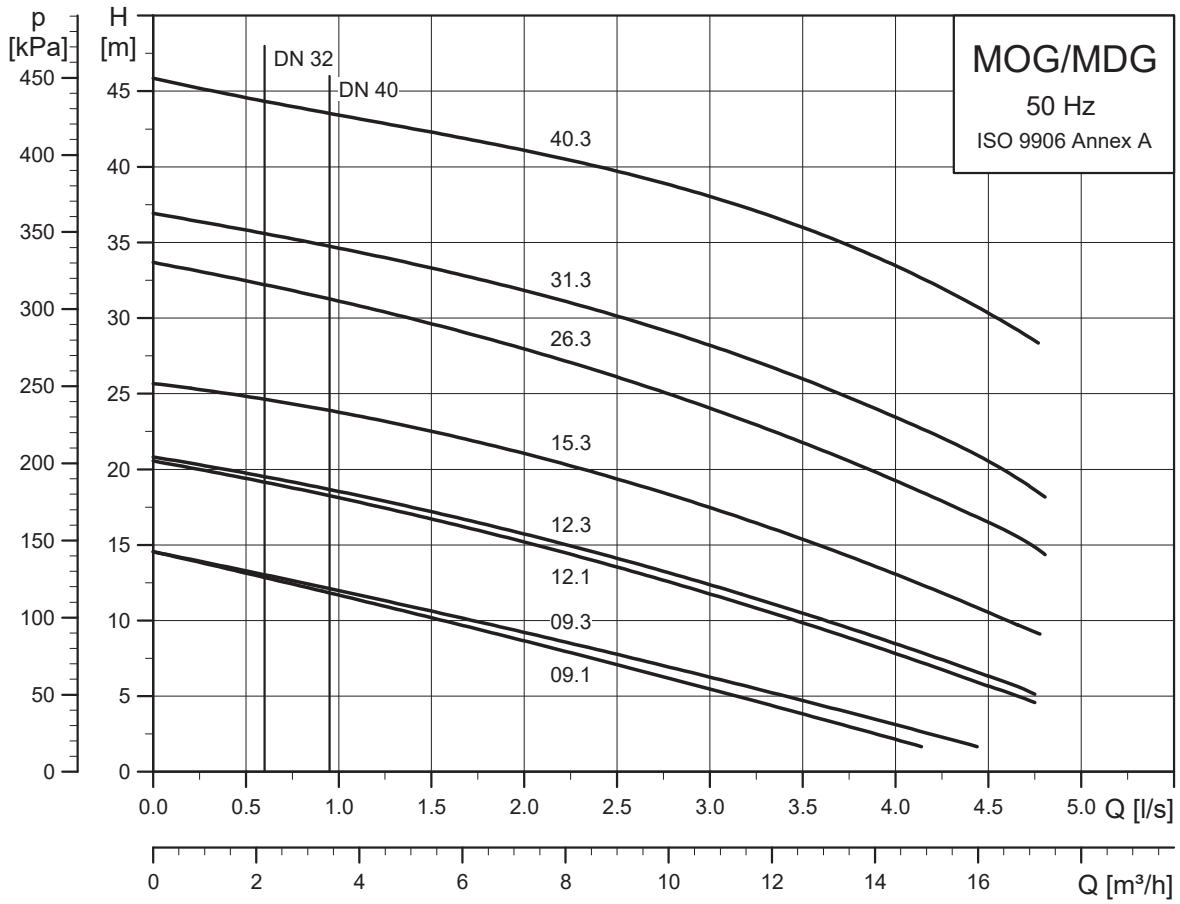

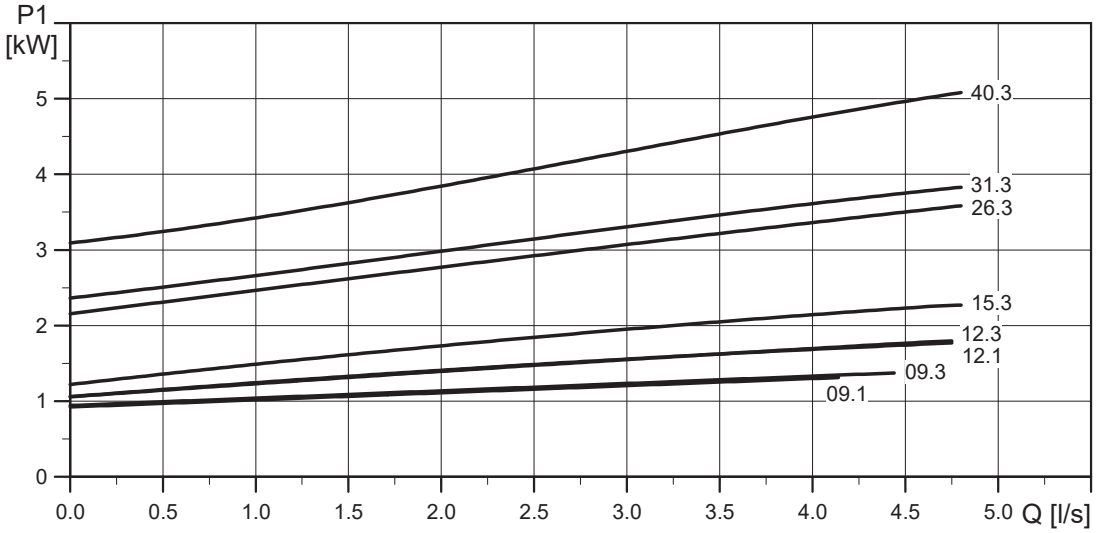

TM051396

Dimensional drawings

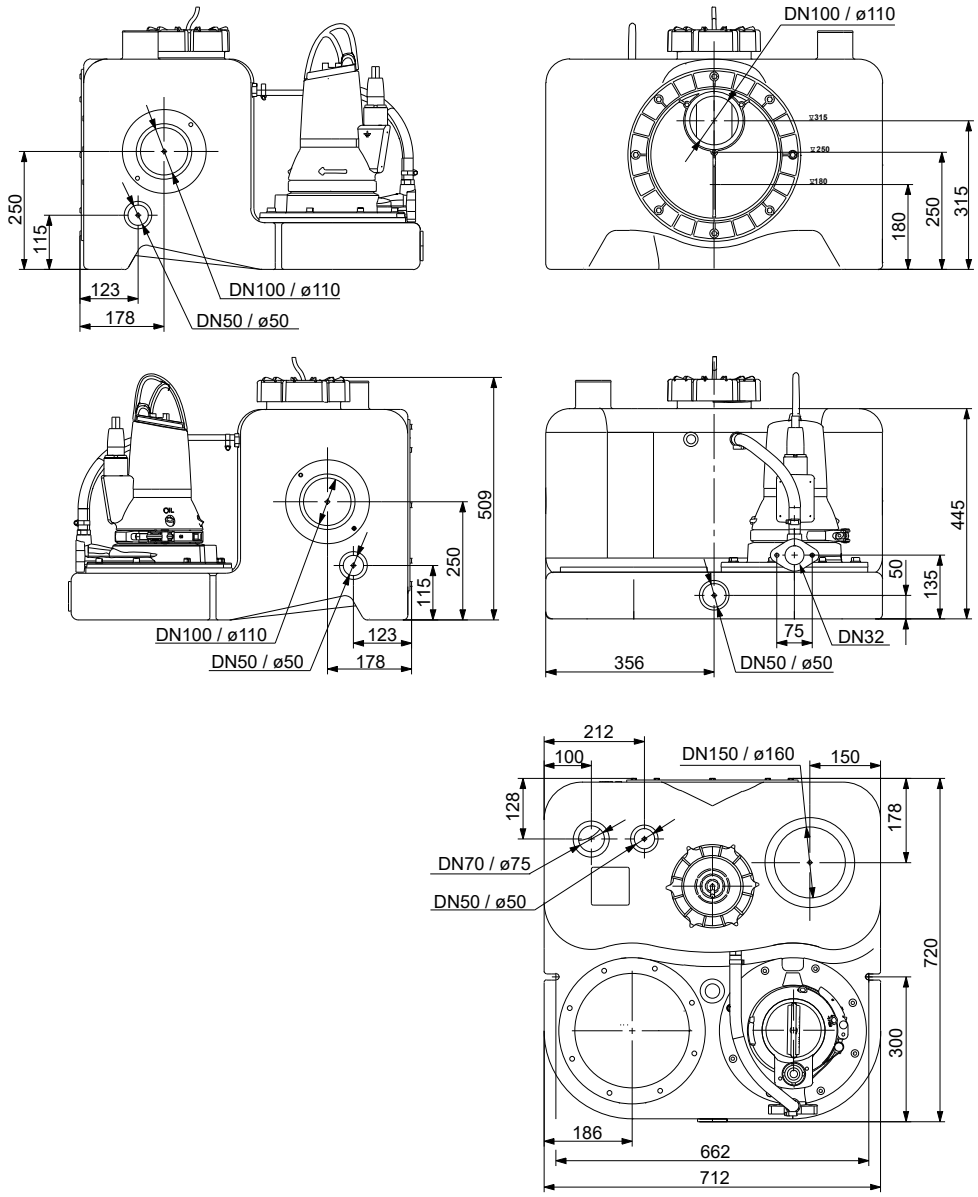

Accessories

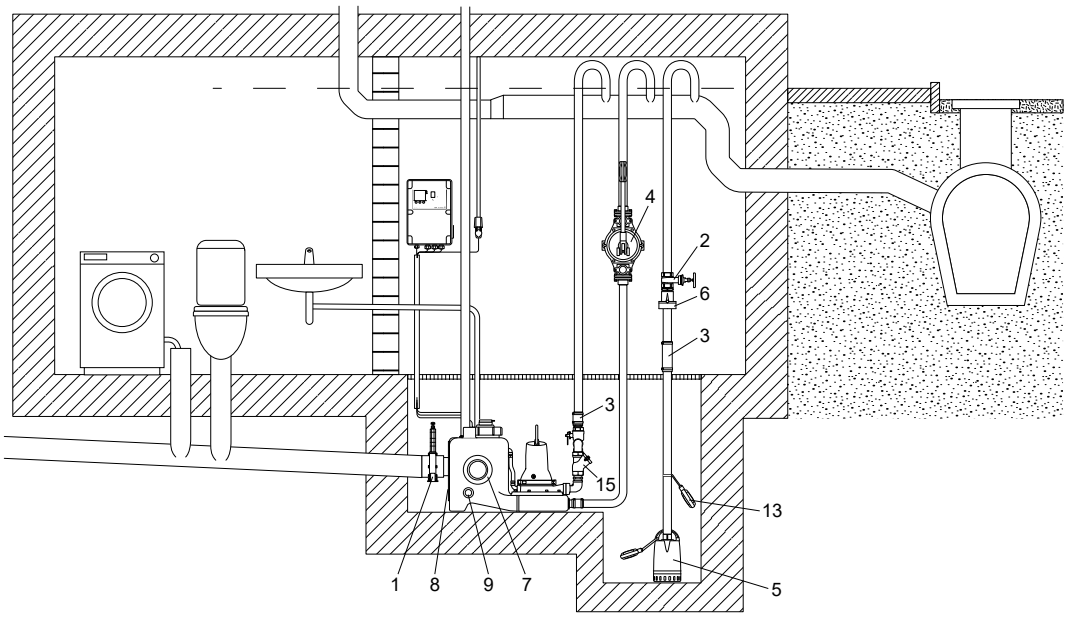

Accessories for MULTILIFT MOG

Pos.	Figure	Description	Dimensions	Product number
1	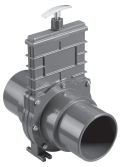	Isolating valve, PVC	DN 100 Installation length: 130 mm Height: 375 mm Connecting piece: ∅110	96615831
2		Isolating valve, brass	DN 32 Installation length: 76 mm Connection: Rp 1 1/4"	00ID0918
3		Flexible connection with clamps for additional connections and inlets	DN 32 Length: 150 mm Internal ∅42	91071645
4		Manually operated diaphragm pump	Installation length: 435 mm Width: 234 mm Connection: Rp 1 1/2" Pumped volume per cycle: 0.65 litre Maximum suction lift: 4 m Maximum pump head: 20 m	96003721
5	For wastewater pump, for example, UNILIFT CC and KP, see data booklet for the pump or Grundfos Product Center.			
6		Non-return flap valve, composite	Length: 90 mm Height: 90 mm Connection: Rp 1 1/4"	96005308
7		Socket seal for additional standard inlet	DN 100, internal ∅110	97726942
		Socket seal for additional inlet (vertical inlet on top)	DN 150, internal ∅160	96636544

Pos.	Figure	Description	Dimensions	Product number
8	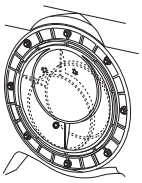	Turnable inlet disk with socket seal for adjustable inlet level	DN 150 Internal ∅160	98079681
9		Socket seal for additional inlet	DN 50 Internal ∅48-50	98079669
N/A		Hole saw	∅43 mm × 33 mm	99865001
			∅102 mm × 38 mm	96571536
			∅153 mm × 38 mm	99865057
N/A		Signal lamp for wall mounting	1 × 230 V, 50 Hz	91077209
N/A		Signal horn	Indoors, 1 × 230 V, 50 Hz	62500021
			Outdoors, 1 × 230 V, 50 Hz	62500022
13		Level switch type SAS	Cable length 5 m, 250 V	00ID7805
N/A		External main switch for supply cable	Up to 25 A	96002511
15	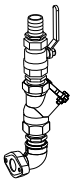	1 1/2" complete pre-assembled outlet pipework, including: • 1 × flexible connection with 2 clamps, DN 40 (not shown, see pos. 3) • 1 × hose nozzle, Rp 1 1/2 / DN 40 • 1 × isolating valve (ball), R 1 1/2 • 2 × double nipple, Rp 1 1/2 • 1 × non-return ball valve, R 1 1/2 • 1 × bend, 90 ° Rp 1 1/4 / R 1 1/2 • (Pipework can be set in 1 1/4" / DN 32 locally)		98085356
N/A		Non-return ball valve, Rp 1 1/4, made of cast iron with epoxy coating, to be mounted on installation site	Length: 140 mm Width: 83 mm	96116550
		Non-return ball valve, Rp 1 1/2, made of cast iron with epoxy coating	Length: 140 mm Width: 83 mm	96489972
N/A		Vent valve (with filter)	DN 70/80/100	98059596
N/A		Filter kit for vent valve	DN 70/80/100	98059594
N/A		Wall installation box for vent valve	204 × 204 × 130 mm	98059598
N/A	-	Pressure hose for sensor, as a replacement	30 m 8 × 1.25 mm	98403665

7. MULTILIFT MD

MULTILIFT MD is designed according to EN 12050-1 and approved by an external institute. It is supplied complete and ready to install with butterfly non-return valve.

TM050430

MULTILIFT MD

Applications

MULTILIFT MD is a compact and reliable lifting station with easy-to-operate controller for pumping of domestic wastewater (with faeces) in multifamily houses as well as in public and commercial buildings, such as offices, schools, hotels and restaurants.

MULTILIFT MD is typically used for the following:

- basement installation below sewer level
- renovation or modernisation of existing buildings, for example, developing basements with fitness room, sauna, bath and washroom
  - direct connection of wall-hung or floor-standing toilets with horizontal outlet according to EN 33/EN 37.

TM051772

Example of installation of MULTILIFT MD in a pit in the building's basement

Sizing guide

The table below show the sizing guide with maximum length of vertical and horizontal pipes depending on the internal pipe diameter and the duty point. The non-return valve, an isolating valve and four bends have been taken into account. The limit of use is based on the self cleaning velocity of 0.7 m/s.

	Max. pipe length of vertical and horizontal outlet pipes									
Q [l/s]	**3.5** [14)]	**5.5** [15)]	**6.5**	**8**	**9**	**10**	**12**	**14**		
15 m	-	-	-	-	-	-	-	-	DN 100	MD. 38
	83	-	-	-	-	-	-	-	DN 80	
13 m	-	98	-	-	-	-	-	-	DN 100	MD. 38
	308	17	-	-	-	-	-	-	DN 80	
	-	-	-	-	-	-	-	-	DN 100	MD. 32
	118	-	-	-	-	-	-	-	DN 80	
11 m	-	385	150	90	21	-	-	-	DN 100	MD. 38
	534	113	37	18	-	-	-	-	DN 80	
	-	122	-	-	-	-	-	-	DN 100	MD. 32
	344	26	-	-	-	-	-	-	DN 80	
9 m	-	673	357	227	130	52	-	-	DN 100	MD. 38
	759	210	107	66	34	8	-	-	DN 80	
	-	410	160	98	18	40	-	-	DN 100	MD. 32
	569	123	41	22	-	-	-	-	DN 80	
	-	-	-	-	-	-	-	-	DN 100	MD. 24
	186	-	-	-	-	-	-	-	DN 80	
7 m	-	960	563	364	238	140	16	8	DN 100	MD. 38
	985	306	178	113	72	39	-	-	DN 80	
	-	697	367	235	127	49	-	-	DN 100	MD. 32
	795	219	112	70	34	8	-	-	DN 80	
	-	219	-	-	-	-	-	-	DN 100	MD. 24
	411	61	-	-	-	-	-	-	DN 80	
	-	63	-	-	-	-	-	-	DN 100	MD. 22
	129	9	-	-	-	-	-	-	DN 80	
5 m	-	1247	770	501	347	229	78	54	DN 100	MD. 38
	1211	403	248	161	110	71	20	12	DN 80	
	-	984	573	372	235	137	17	9	DN 100	MD. 32
	1021	316	182	117	72	39	-	-	DN 80	
	-	506	195	122	31	-	-	-	DN 100	MD. 24
	637	157	56	33	3	-	-	-	DN 80	
	-	350	207	130	86	54	15	7	DN 100	MD. 22
	354	106	60	36	21	11	-	-	DN 80	
	-	114	27	12	-	-	-	-	DN 100	MD. 15
	189	27	-	-	-	-	-	-	DN 80	
	-	63	5	-	-	-	-	-	DN 100	MD. 12
	115	10	-	-	-	-	-	-	DN 80	

Max. pipe length of vertical and horizontal outlet pipes										
Q [l/s]	**3.5** [14]	**5.5** [15]	**6.5**	**8**	**9**	**10**	**12**	**14**		
3 m	-	1534	976	638	456	317	140	100	DN 100	MD. 38
	1436	499	318	209	148	102	43	30	DN 80	
	-	1271	780	509	344	226	79	55	DN 100	MD. 32
	1246	412	253	165	110	71	22	14	DN 80	
	-	793	401	259	140	61	-	-	DN 100	MD. 24
	863	254	126	80	41	15	-	-	DN 80	
	-	638	414	267	194	143	77	54	DN 100	MD. 22
	580	202	130	83	59	43	21	14	DN 80	
	-	402	234	149	95	54	-	-	DN 100	MD. 15
	415	124	70	43	26	12	-	-	DN 80	
	-	350	212	97	48	13	-	-	DN 100	MD. 12
	341	107	63	26	10	-	-	-	DN 80	
2 m	-	1677	1078	706	509	360	209	122	DN 100	MD. 38
	1548	547	353	231	166	117	66	37	DN 80	
	-	1414	882	576	397	269	146	77	DN 100	MD. 32
	1358	459	287	188	128	86	45	22	DN 80	
	-	936	504	326	193	104	36	2	DN 100	MD. 24
	974	301	160	103	59	29	7	-	DN 80	
	-	780	516	335	248	186	116	76	DN 100	MD. 22
	692	249	165	106	78	57	35	21	DN 80	
	-	544	336	216	149	97	47	18	DN 100	MD. 15
	527	171	104	66	44	27	11	-	DN 80	
	-	493	314	165	101	56	-	-	DN 100	MD. 12
	453	154	97	49	28	13	-	-	DN 80	

[14] Required min. flow for v = 0.7 m/s at DN 80

[15] Required min. flow for v = 0.7 m/s at DN 100

Construction

MULTILIFT MD

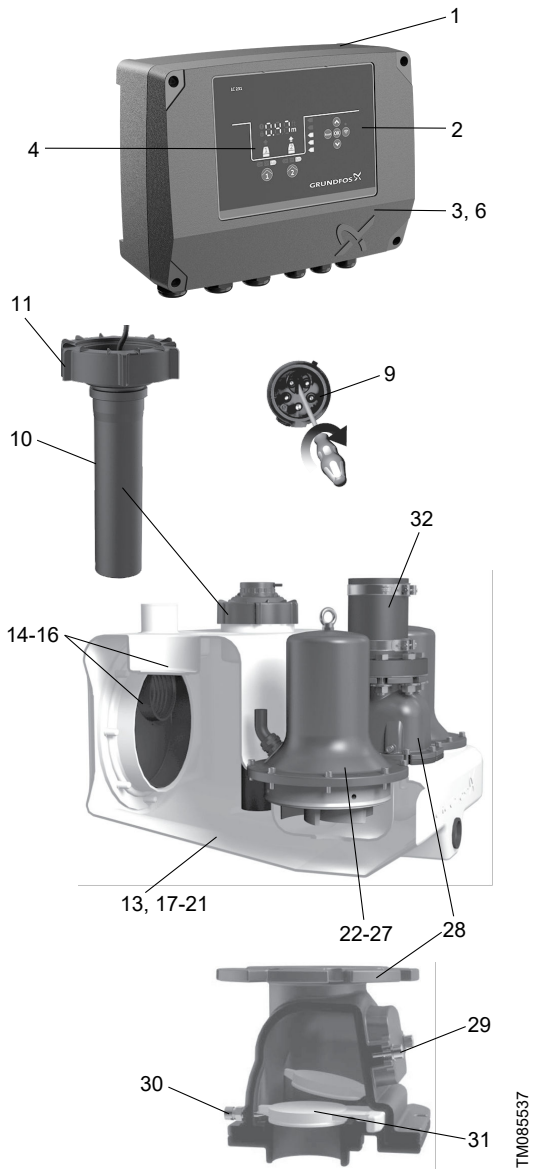

Pos.	Controller
1	Pre-assembled and ready to operate with all necessary presettings - only the inlet level needs to be set.
2	Controller with LED display, multiple motor protection features and further safety options
3	Potential-free contact for common alarm (inside)
4	External alarm can be used, for example, to monitor the installation room or well around the lifting station with separate float switch outside the tank to detect groundwater intake, water pipe burst or other flooding accidents; no extra alarm device needed.
6	Connection of Grundfos GO for further information and adjustments
9	Phase inverter for easy changing of phases (only three-phase versions)
Pos.	**Level sensor**
10	No moving parts in pumped liquid. Blockage-free pressure tube connected via a pressure hose to the pressure sensor in the controller.
11	Screw cap for pressure tube fixation and tank inspection cover enabling easy maintenance of pressure tube and inspection of collecting tank
Pos.	**Collecting tank**
13	Design and volume adapted to multifamily house and commercial applications
14	Possible to connect inlets from all directions and to connect floor-standing and wall-hung toilets; ideal for replacement and new installation
15	Unique, patented inlet disk, DN 100 (DN 150 as accessory), for stepless adjustment to inlet levels from 180 to 315 mm
16	Socket sealing for space saving installation
17	Wastewater-resistant and odour-free, seamless collecting tank made of polyethylene (PE) with strong walls
18	Sedimentation-free tank bottom with chamfers, leading the wastewater to the pump to reduce the need of cleaning the tank
19	Pressure tight design up to 5 m water column according to EN 12050-1
20	Suitable for liquid temperature up to 50 °C
21	Easy handling during transportation and installation
Pos.	**Pump**
22	Six motor sizes adapted to all application needs, up to 21 m head and 50 m^3 flow
23	Vortex impeller with large free passage for trouble-free operation and unchanged performance throughout the entire life of the pump
24	Motor protection with built-in thermal switch
25	Highly reliable motor design with up to 60 starts per hour for handling peak inflow conditions
26	Triple shaft seal and a chamber filled with non-toxic oil to ensure reliable, long service life
27	Self-venting pump housing due to hydraulic design
Pos.	**Non-return valve DN 80**
28	Designed and approved according to EN 12050-4
29	Compact design with large and well accessible inspection cover for taking out foreign bodies, if necessary
30	Lifting device to drain outlet pipe in case of service or maintenance
31	Smooth and silent flap valve
Pos.	**Outlet**
32	Flexible and sound-absorbing outlet connection DN 100

Product description

Features

- Complete, pre-assembled and ready to install
- patented, turnable inlet disk enabling flexible connections from 180 to 315 mm inlet levels - ideal for new installations and replacements
- seven different inlet connections on all sides offer maximum installation flexibility
- six different motor sizes for perfect adjustment to the required draining performance
- easy-to-operate LC 231 controller with outstanding motor protection and additional safety and service functions.
- reliable, blockage-free level detection with no direct contact to the pumped liquid
- one backup pump for high operating safety
- easy and smart maintenance and service features for pump, sensor tube, collecting tank and controller.

Related information

Construction

LC 231, LC 241 Level controller

Scope of delivery

Grundfos MULTILIFT M (one pump) and MD (two pumps) lifting stations are supplied complete with collecting tank, non-return valves, a sensor unit with cable and one or two pumps with cable, both connected to the level controller. The controller includes a power cable with plug.

An accessories bag containing the following items is also included:

- 1 × installation and operating instructions
- 1 × outlet adapter flange, DN 80, with connecting piece, DN 100 (outer diameter, 110 mm)
- 1 × flexible hose, DN 100, and two clamps to connect the outlet pipe
- 1 × flexible hose, DN 70, and two clamps to connect the vent pipe
- 2 × screw and expansion anchor for tank fixation
- 3 × screw and washer for fastening a pipe plug in the inlet disk, if required
- 1 × socket seal, DN 100
- 1 × socket seal, DN 50, for diaphragm pump connection or inlet, DN 50
- 1 × gasket kit, DN 80, 4 bolts M16, nuts and washers (galvanised).

Type key

Example: MLD.22.3.4

Code	Designation	Explanation
M	MULTILIFT lifting station	Type range
[ ]	Standard tank	Tank size
L	Large tank	
[ ]	One pump	Number of pumps
D	Two pumps	
OG	One grinder pump	
DG	Two grinder pumps	
22	Power [W]	Output power, P_2 / 100 [W]
1	Singe-phase motor	Number of phases
3	Three-phase motor	
2	2-pole motor	Number of poles
4	4-pole motor	

Collecting tank

The gas-, odour- and pressure-tight collecting tank is made of wastewater-resistant polyethylene (PE) and has all necessary ports for the connection of inlet pipes, outlet pipe, vent pipe and a manually operated diaphragm pump, which is available as an accessory.

The main inlet on the rear side of the collecting tank is designed as a turnable disk, DN 100 (optional DN 150), adjustable to any inlet level between 180 and 315 mm.

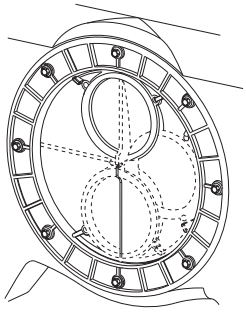

TM073993

Main inlet with eccentric disk

The tank volume and effective volume (volume between start and stop) of the collecting tank appear from the following table:

Inlet level [mm]	Total tank volume [l]	Effective tank volume [l]
180	130	49
250		69
315		86

Setting to the relevant inlet level must be made via the operating panel of the controller. The factory-set inlet level is 250 mm above the floor.

Pump

The composite impeller of the submersible cast-iron pump is designed as a free-flow Vortex impeller, ensuring almost unchanged performance throughout the entire life of the pump. The pump has three shaft seals with an oil chamber filled for life with non-toxic oil.

Single-phase motors are protected by a thermal switch in the windings and run via a capacitor inside the controller cabinet. Three-phase motors are protected by a thermal switch in the windings and an additional thermal circuit breaker in the controller cabinet.

If the motor is overloaded, it stops automatically. When it has cooled to normal operating temperature, it restarts automatically when automatic reset is set at the controller (factory setting).

In case of high inflow, the pump can start 60 times per hour. The start and stop sequence must correspond to intermittent duty.

Related information

Electrical data

Technical data

General data

Parameter	Value
Free passage	50 mm
Liquid temperature	Max. 40 °C For short periods up to 60 °C (max. 5 minutes per hour)
Ambient temperature	0-40 °C
pH-value	4-10
Max. density of pumped liquid	1,100 kg/m^3
Enclosure class (lifting station and motor)	IP68 (2 m water column for 7 days)
Enclosure class (controller)	IP55
Insulation class (motor)	F (155 °C)
Voltage (motor)	1 × 230 V 3 × 230 V 3 × 400 V
Frequency (motor)	50 Hz
Potential-free contacts	NO/NC, max. 250 VAC / 2 A
Voltage (sensor)	12 V
Signal output (sensor)	0-5 V
Power consumption (controller)	2 W
Number of starts per hour	Max. 60
Sound pressure level	< 70 dB(A)
Dimensions (controller)	Height = 390 mm Width = 262 mm Depth = 142 mm

Related information

Dimensional drawings

Material specification

Component	Material
Collecting tank	Polyethylene (PE)
Pump housing	Cast iron
Impeller	Luranyl
Shaft	Stainless steel 1.4301
Shaft seal	NBR
Control cabinet	Acrylonitrile butadiene styrene (ABS)
Screws	Stainless steel 1.4301
O-rings	NBR rubber
Cable	Neoprene

Mechanical data

MULTILIFT	Inlet level [mm]	Tank volume [l]	Effective tank volume [l]	Weight [kg]	Plug type	Cable length between plug and controller [m]	Cable length between motor and controller [m]	Product number
MD.12.1.4	180/250/315	130	49/69/86	119	CEE 2P+E 32A	1.5	4	97901084
MD.12.3.4				114	CEE 3P+N+E, 16A			97901085
MD.15.1.4				119	CEE 2P+E 32A			97901086
MD.15.3.4				114	CEE 3P+N+E, 16A			97901087
MD.22.3.4				121	CEE 3P+E 32A			97901089
MD.22.3.4				121	CEE 3P+N+E, 16A			97901088
MD.24.3.2				126	CEE 3P+E 32A			97901091
MD.24.3.2				126	CEE 3P+N+E, 16A			97901090
MD.32.3.2				126	CEE 3P+E 32A			97901093
MD.32.3.2				126	CEE 3P+N+E, 16A			97901092
MD.38.3.2				126	CEE 3P+E 32A			97901095
MD.38.3.2				126	CEE 3P+N+E, 16A			97901094
MD.12.1.4	180/250/315	130	49/69/86	123	CEE 2P+E 32A	1.5	10	97901096
MD.12.3.4				118	CEE 3P+N+E, 16A			97901097
MD.15.1.4				123	CEE 2P+E 32A			97901098
MD.15.3.4				118	CEE 3P+N+E, 16A			97901099
MD.22.3.4				125	CEE 3P+N+E, 16A			97901100
MD.24.3.2				130	CEE 3P+N+E, 16A			97901101
MD.32.3.2				131	CEE 3P+N+E, 16A			97901102
MD.38.3.2				131	CEE 3P+N+E, 16A			97901103

Electrical data

MULTILIFT	Duty	Voltage [V] [16]	Power P1 / P2 [kW]	$I_{1/1}$ / I_{start} [A]	rpm [min^{-1}]	Number of poles	Starting method
MD.12.1.4	S3-50 %, 1 min.	1 × 230 V	1.9 / 1.4	9 / 39	1430	4	DOL
MD.12.3.4		3 × 400 V	1.8 / 1.5	3.6 / 19			
MD.15.1.4		1 × 230 V	2.2 / 1.6	10.1 / 39	1410	4	
MD.15.3.4		3 × 400 V	2.1 / 1.7	4.0 / 19			
MD.22.3.4	S3-50 %, 1 min.	3 × 230 V	3.0 / 2.5	10.2 / 51.5	1430	4	
MD.22.3.4		3 × 400 V		5.5 / 29.7			
MD.24.3.2		3 × 230 V	3.1 / 2.7	9.7 / 88.7	2920	2	
MD.24.3.2		3 × 400 V		5.5 / 39			
MD.32.3.2		3 × 230 V	4.0 / 3.4	88.7	2920	2	
MD.32.3.2		3 × 400 V		6.7 / 39			
MD.38.3.2	S3-40 %, 1 min.	3 × 230 V	4.6 / 3.8	13 / 88.7	2880	2	
MD.38.3.2		3 × 400 V		7.5 / 39			

16) Tolerance: -10 % / +6 %

Performance curves

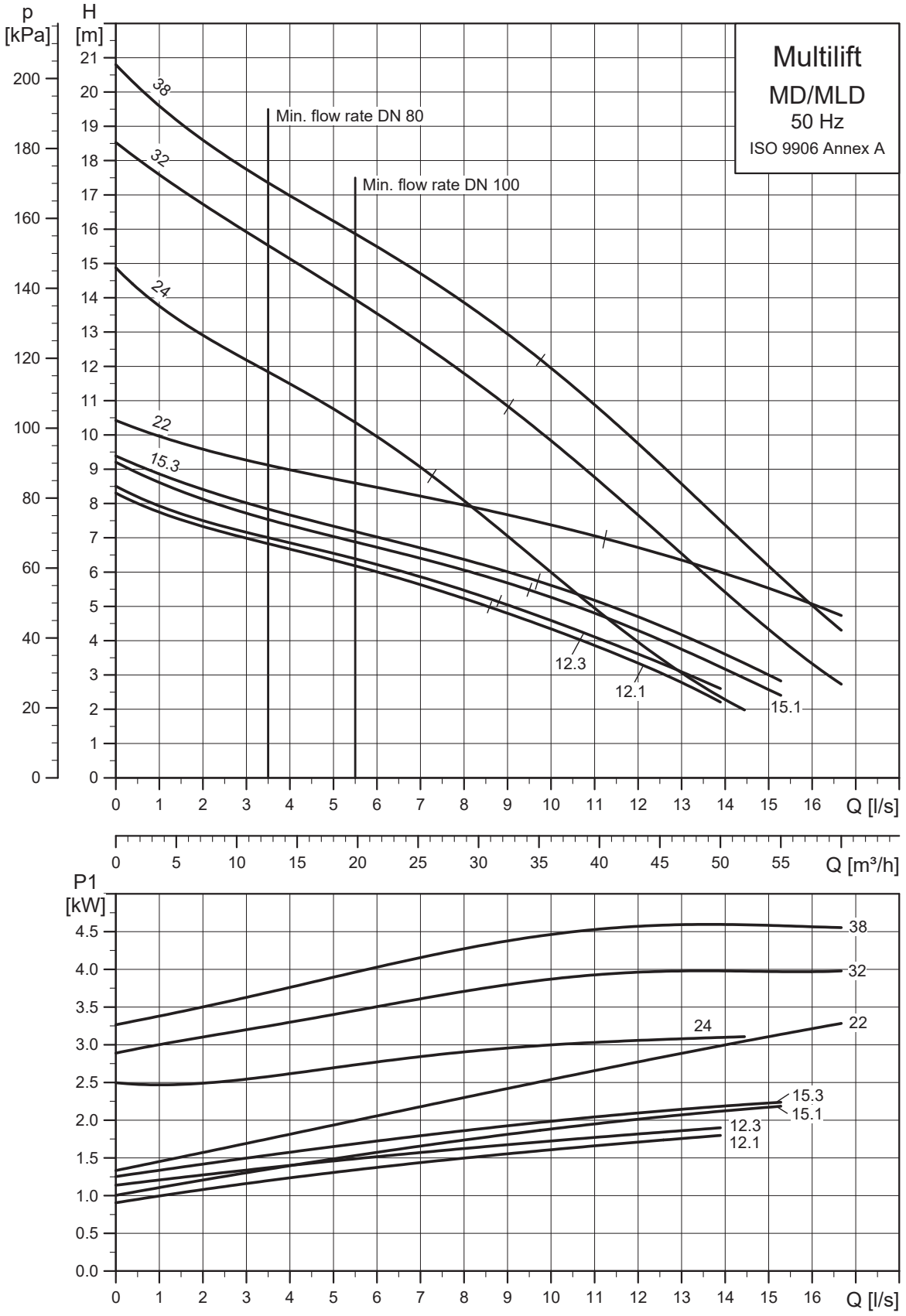

Dimensional drawings

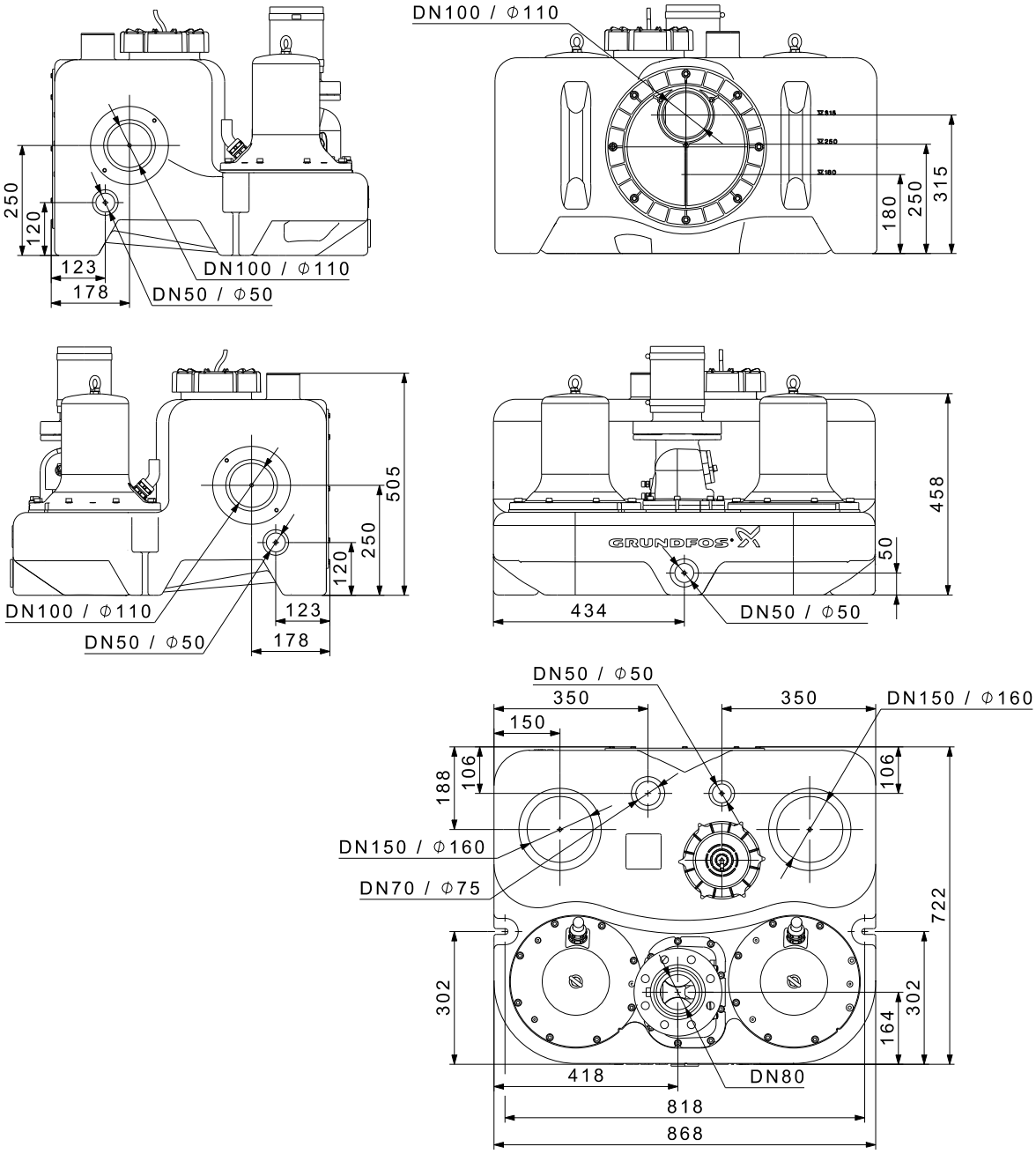

TM050441

Accessories

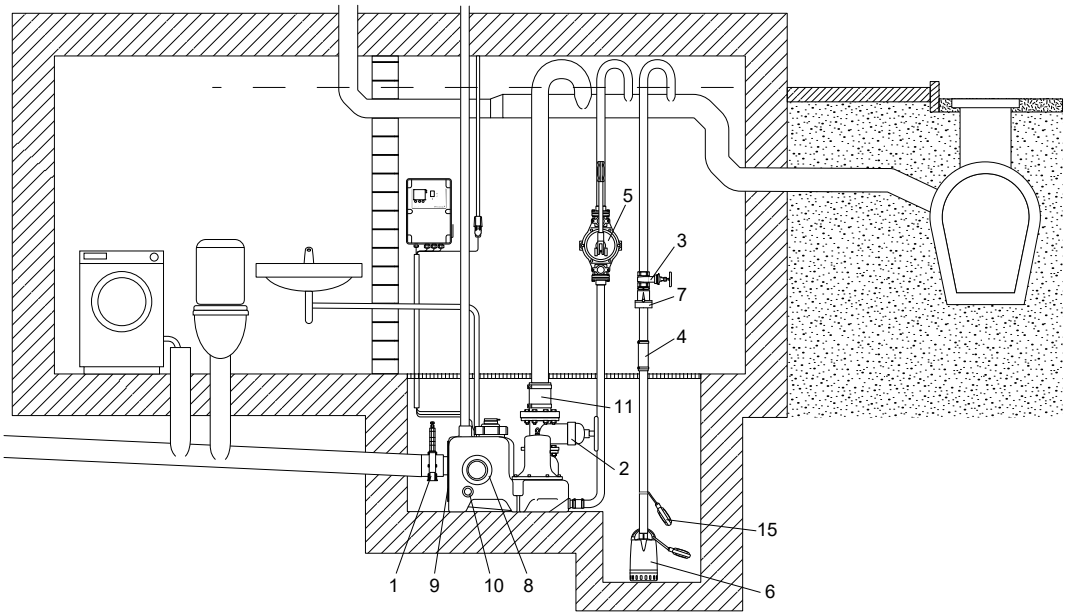

Accessories for MULTILIFT MD

Pos.	Figure	Description	Dimensions	Product number
1		Isolating valve, PVC	DN 100 Installation length: 130 mm Height: 375 mm Connecting piece: ∅110	96615831
2		Isolating valve, epoxy-coated cast iron	DN 80 Installation length: 180 mm Height: 300 mm Connection: flange PN 10	96002011
3		Isolating valve, brass	DN 32 Length: 76 mm Connection: Rp 1 1/4"	00ID0918
4		Flexible connection with clamps for additional connections and inlets	DN 32 Length: 150 mm Internal ∅42	91071645
5		Manually operated diaphragm pump	Installation length: 435 mm Width: 234 mm Connection: Rp 1 1/2" Pumped volume per cycle: 0.65 litre Maximum suction lift: 4 m Maximum pump head: 20 m	96003721
6	For wastewater pump, for example, UNILIFT CC and KP, see data booklet for the pump or Grundfos Product Center.			
7		Non-return flap valve, composite	Length: 90 mm Height: 90 mm Connection: Rp 1 1/4"	96005308
8		Socket seal for additional standard inlet	DN 100 Internal ∅110	97726942
		Socket seal for additional inlet (vertical inlet on top)	DN 150, internal ∅160	96636544

Pos.	Figure	Description	Dimensions	Product number
9	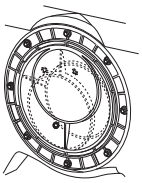	Turnable inlet disk with socket seal for adjustable inlet level	DN 150 Internal ∅160	98079681
10		Socket seal for additional inlet	DN 50 Internal ∅48-50	98079669
11		Bolts, nuts, 8 of each, (galvanised) Gasket	M16 × 65 mm DN 80	96001999
N/A		Hole saw	∅43 mm × 33 mm	99865001
			∅102 mm × 38 mm	96571536
			∅153 mm × 38 mm	99865057
N/A		Signal lamp for wall mounting	1 × 230 V, 50 Hz	91077209
N/A		Signal horn	Indoors, 1 × 230 V, 50 Hz	62500021
			Outdoors, 1 × 230 V, 50 Hz	62500022
15		Level switch type SAS	Cable length 5 m, 250 V	00ID7805
N/A		External main switch for supply cable	Up to 25 A	96002511
N/A		Vent valve (with filter)	DN 70/80/100	98059596
N/A	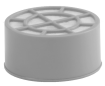	Filter kit for vent valve	DN 70/80/100	98059594
N/A		Wall installation box for vent valve	204 × 204 × 130 mm	98059598
N/A	-	Pressure hose for sensor, as a replacement	30 m 8 × 1.25 mm	98403665

8. MULTILIFT MLD

MULTILIFT MLD is designed according to EN 12050-1 and approved by an external institute. It is supplied complete and ready to install with butterfly non-return valve.

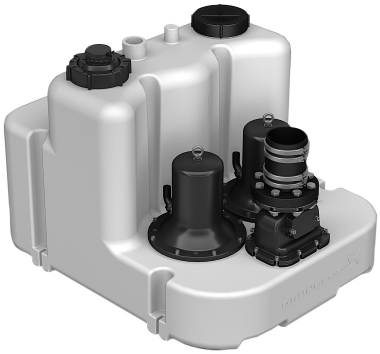

TM050432

MULTILIFT MLD

Applications

MULTILIFT MLD is a compact and reliable lifting station with easy-to-operate controller for pumping of domestic wastewater (with faeces) in multifamily houses as well as in public and commercial buildings, such as offices, schools, hotels and restaurants.

MULTILIFT MLD is typically used for the following:

- basement installation below sewer level
- renovation or modernisation of existing buildings, for example, developing basements with fitness room, sauna, bath and washroom.

TM051772

Example of installation of MULTILIFT MLD in a pit in the building's basement

Sizing guide

The table below shows the sizing guide with maximum length of vertical and horizontal pipes depending on the internal pipe diameter and the duty point. The non-return valve, an isolating valve and four bends have been taken into account. The limit of use is based on the self cleaning velocity of 0.7 m/s.

	Max. pipe length of vertical and horizontal outlet pipes									
Q [l/s]	**3.5** [17]	**5.5** [18]	**6.5**	**8**	**9**	**10**	**12**	**14**		
15 m	-	-	-	-	-	-	-	-	DN 100	MLD. 38
	83	-	-	-	-	-	-	-	DN 80	
13 m	-	98	-	-	-	-	-	-	DN 100	MLD. 38
	308	17	-	-	-	-	-	-	DN 80	
	-	-	-	-	-	-	-	-	DN 100	MLD. 32
	118	-	-	-	-	-	-	-	DN 80	
11 m	-	385	150	90	21	-	-	-	DN 100	MLD. 38
	534	113	37	18	-	-	-	-	DN 80	
	-	122	-	-	-	-	-	-	DN 100	MLD. 32
	344	26	-	-	-	-	-	-	DN 80	
9 m	-	673	357	227	130	52	-	-	DN 100	MLD. 38
	759	210	107	66	34	8	-	-	DN 80	
	-	410	160	98	18	40	-	-	DN 100	MLD. 32
	569	123	41	22	-	-	-	-	DN 80	
	-	-	-	-	-	-	-	-	DN 100	MLD. 24
	186	-	-	-	-	-	-	-	DN 80	
7 m	-	960	563	364	238	140	16	8	DN 100	MLD. 38
	985	306	178	113	72	39	-	-	DN 80	
	-	697	367	235	127	49	-	-	DN 100	MLD. 32
	795	219	112	70	34	8	-	-	DN 80	
	-	219	-	-	-	-	-	-	DN 100	MLD. 24
	411	61	-	-	-	-	-	-	DN 80	
	-	63	-	-	-	-	-	-	DN 100	MLD. 22
	129	9	-	-	-	-	-	-	DN 80	
5 m	-	1247	770	501	347	229	78	54	DN 100	MLD. 38
	1211	403	248	161	110	71	20	12	DN 80	
	-	984	573	372	235	137	17	9	DN 100	MLD. 32
	1021	316	182	117	72	39	-	-	DN 80	
	-	506	195	122	31	-	-	-	DN 100	MLD. 24
	637	157	56	33	3	-	-	-	DN 80	
	-	350	207	130	86	54	15	7	DN 100	MLD. 22
	354	106	60	36	21	11	-	-	DN 80	
	-	114	27	12	-	-	-	-	DN 100	MLD. 15
	189	27	-	-	-	-	-	-	DN 80	
	-	63	5	-	-	-	-	-	DN 100	MLD. 12
	115	10	-	-	-	-	-	-	DN 80	

Max. pipe length of vertical and horizontal outlet pipes										
Q [l/s]	**3.5** [17]	**5.5** [18]	**6.5**	**8**	**9**	**10**	**12**	**14**		
3 m	-	1534	976	638	456	317	140	100	DN 100	MLD. 38
	1436	499	318	209	148	102	43	30	DN 80	
	-	1271	780	509	344	226	79	55	DN 100	MLD. 32
	1246	412	253	165	110	71	22	14	DN 80	
	-	793	401	259	140	61	-	-	DN 100	MLD. 24
	863	254	126	80	41	15	-	-	DN 80	
	-	638	414	267	194	143	77	54	DN 100	MLD. 22
	580	202	130	83	59	43	21	14	DN 80	
	-	402	234	149	95	54	-	-	DN 100	MLD. 15
	415	124	70	43	26	12	-	-	DN 80	
	-	350	212	97	48	13	-	-	DN 100	MLD. 12
	341	107	63	26	10	-	-	-	DN 80	
2 m	-	1677	1078	706	509	360	209	122	DN 100	MLD. 38
	1548	547	353	231	166	117	66	37	DN 80	
	-	1414	882	576	397	269	146	77	DN 100	MLD. 32
	1358	459	287	188	128	86	45	22	DN 80	
	-	936	504	326	193	104	36	2	DN 100	MLD. 24
	974	301	160	103	59	29	7	-	DN 80	
	-	780	516	335	248	186	116	76	DN 100	MLD. 22
	692	249	165	106	78	57	35	21	DN 80	
	-	544	336	216	149	97	47	18	DN 100	MLD. 15
	527	171	104	66	44	27	11	-	DN 80	
	-	493	314	165	101	56	-	-	DN 100	MLD. 12
	453	154	97	49	28	13	-	-	DN 80	

[17] Required min. flow for v = 0.7 m/s at DN 80

[18] Required min. flow for v = 0.7 m/s at DN 100

Construction

MULTILIFT MLD

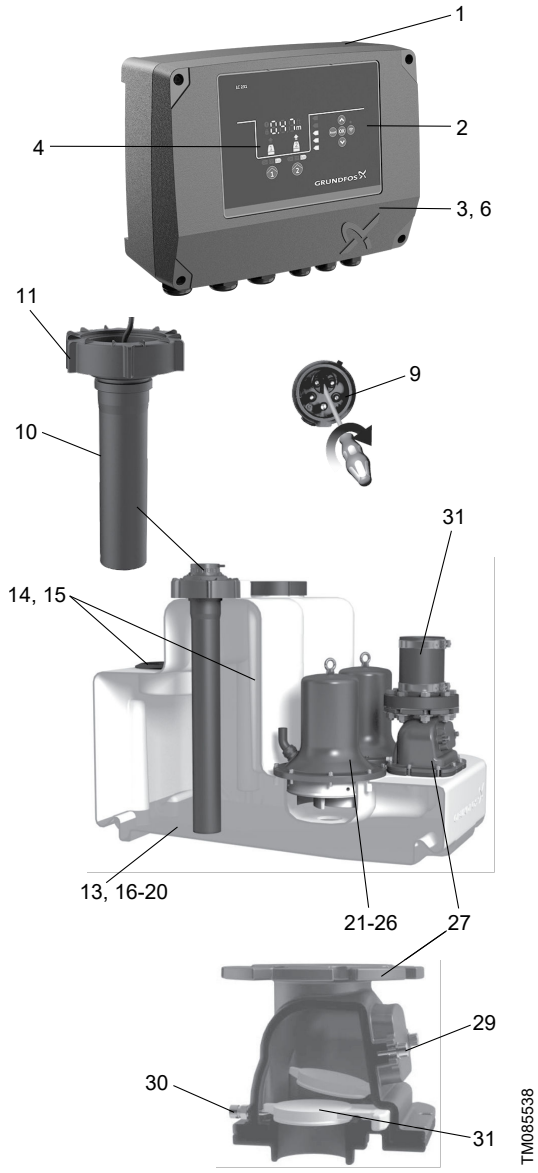

Pos.	Controller
1	Pre-assembled and ready to operate with all necessary presettings - only the inlet level needs to be set
2	Controller with LED display, multiple motor protection features and further safety options
3	Potential-free contact for common alarm (inside)
4	External alarm can be used, for example, to monitor the installation room or well around the lifting station with separate float switch outside the tank to detect groundwater intake, water pipe burst or other flooding accidents; no extra alarm device needed.
6	Connection of Grundfos GO for further information and adjustments
9	Phase inverter for easy changing of phases (only three-phase versions)
Pos.	**Level sensor**
10	No moving parts in pumped liquid. Blockage-free pressure tube connected via a pressure hose to the pressure sensor in the controller.
11	Screw cap for pressure tube fixation and tank inspection cover enabling easy maintenance of pressure tube and inspection of collecting tank
Pos.	**Collecting tank**
13	Design and volume adapted to multifamily house and commercial applications
14	Possible to connect inlet DN 150 from three horizontal directions and vertically
15	High effective tank volume of 190 litres
16	Wastewater-resistant and odour-free, seamless collecting tank made of polyethylene (PE) with strong walls
17	Sedimentation-free tank bottom with chamfers, leading the wastewater to the pump to reduce the need of cleaning the tank
18	Pressure tight design up to 5 m water column according to EN 12050-1
19	Suitable for liquid temperature up to 50 °C
20	Easy handling during transportation and installation
Pos.	**Pump**
21	Six motor sizes adapted to all application needs, up to 21 m head and 50 m^3 flow
22	Vortex impeller with large free passage for trouble-free operation and unchanged performance throughout the entire life of the pump
23	Motor protection with built-in thermal switch
24	Highly reliable motor design with up to 60 starts per hour for handling peak inflow conditions
25	Triple shaft seal and a chamber filled with non-toxic oil to ensure reliable, long service life
26	Self-venting pump housing due to hydraulic design
Pos.	**Non-return valve DN 80**
27	Designed and approved according to EN 12050-4
28	Compact design with large and well accessible inspection cover for taking out foreign bodies, if necessary
29	Lifting device to drain outlet pipe in case of service or maintenance
30	Smooth and silent flap valve
Pos.	**Outlet**
31	Flexible and sound-absorbing outlet connection DN 100

Product description

Features

- Complete, pre-assembled and ready to install
- high effective tank volume up to 3 × 450 litres
- eight different motor sizes for perfect adjustment to the required draining performance
- easy-to-operate LC 231 controller with outstanding motor protection and additional safety and service functions.
- reliable, blockage-free level detection with no direct contact to the pumped liquid
- one backup pump for high operating safety
- easy and smart maintenance and service features for pumps, sensor tube, collecting tank and controller.

Related information

Construction

LC 231, LC 241 Level controller

Scope of delivery

Grundfos MULTILIFT MLD lifting stations are supplied complete with collecting tank, butterfly-non-return valves, a sensor unit with cable and two pumps with cable, both connected to the level controller. The controller includes a power cable with plug.

An accessories bag containing the following items is also included:

- 1 × installation and operating instructions
- 1 × outlet adapter flange, DN 80, with connecting piece, DN 100 (outer diameter, 110 mm)
- 1 × flexible hose, DN 100, and two clamps to connect the outlet pipe
- 1 × flexible hose, DN 70, and two clamps to connect the vent pipe
- 4 × screw and expansion anchor for tank fixation
- 1 × socket seal, DN 150
- 1 × flexible hose connection with two clamps, DN 50, for diaphragm pump connection or inlet, DN 50
- 1 × gasket kit, DN 80, 4 bolts M16, nuts and washers (galvanised).

Type key

Example: MLD.22.3.4

Code	Designation	Explanation
M	MULTILIFT lifting station	Type range
[ ]	Standard tank	Tank size
L	Large tank	
[ ]	One pump	Number of pumps
D	Two pumps	
OG	One grinder pump	
DG	Two grinder pumps	
22	Power [W]	Output power, P_2 / 100 [W]
1	Singe-phase motor	Number of phases
3	Three-phase motor	
2	2-pole motor	Number of poles
4	4-pole motor	

Collecting tank

The gas-, odour- and pressure-tight collecting tank is made of wastewater-resistant polyethylene (PE) and has all necessary ports for the connection of inlet pipes, outlet pipe, vent pipe and a manually operated diaphragm pump, which is available as an accessory.

The tank volume and effective volume (volume between start and stop) of the collecting tank appear from the following table:

Inlet level [mm]	Total tank volume [l]	Effective tank volume [l]
560	270	190

Setting to the relevant inlet level must be made via the operating panel of the controller. The factory-set inlet level is 250 mm above the floor.

Pump

The composite impeller of the submersible cast-iron pump is designed as a free-flow Vortex impeller, ensuring almost unchanged performance throughout the entire life of the pump. The pump has three shaft seals with an oil chamber filled for life with non-toxic oil.

Single-phase motors are protected by a thermal switch in the windings and run via a capacitor inside the controller cabinet. Three-phase motors are protected by a thermal switch in the windings and an additional thermal circuit breaker in the controller cabinet.

If the motor is overloaded, it stops automatically. When it has cooled to normal operating temperature, it restarts automatically when automatic reset is set at the controller (factory setting).

In case of high inflow, the pump can start 60 times per hour. The start and stop sequence must correspond to intermittent duty.

Related information

Electrical data

LC 231, LC 241 Level controller

LC 231, LC 241 Level controller

Technical data

General data

Parameter	Value
Free passage	50 mm
Liquid temperature	Max. 40 °C For short periods up to 60 °C (max. 5 minutes per hour)
Ambient temperature	0-40 °C
pH-value	4-10
Max. density of pumped liquid	1,100 kg/m^3
Enclosure class (lifting station and motor)	IP68 (2 m water column for 7 days)
Enclosure class (controller)	IP55
Insulation class (motor)	F (155 °C)
Voltage (motor)	1 × 230 V 3 × 230 V 3 × 400 V
Frequency (motor)	50 Hz
Potential-free contacts	NO/NC, max. 250 VAC / 2 A
Voltage (sensor)	12 V
Signal output (sensor)	0-5 V
Power consumption (controller)	2 W
Number of starts per hour	Max. 60
Sound pressure level	< 70 dB(A)
Dimensions (controller)	Height = 390 mm Width = 262 mm Depth = 142 mm

Related information

Dimensional drawings

Material specification

Component	Material
Collecting tank	Polyethylene (PE)
Pump housing	Cast iron
Impeller	Luranyl
Shaft	Stainless steel 1.4301
Shaft seal	NBR
Control cabinet	Acrylonitrile butadiene styrene (ABS)
Screws	Stainless steel 1.4301
O-rings	NBR rubber
Cable	Neoprene

Mechanical data and order data

MULTILIFT	Inlet level [mm]	Tank volume [l]	Effective tank volume [l]	Weight [kg]	Plug type	Cable length between plug and controller [m]	Cable length between motor and controller [m]	Product number
MLD.12.1.4	560	270	190	129	CEE 2P+E 32A	1.5	4	97901104
MLD.12.3.4				124	CEE 3P+N+E, 16A			97901105
MLD.15.1.4				129	CEE 2P+E 32A			97901106
MLD.15.3.4				124	CEE 3P+N+E, 16A			97901107
MLD.22.3.4				132	CEE 3P+E 32A			97901109
MLD.22.3.4				131	CEE 3P+N+E, 16A			97901108
MLD.24.3.2				137	CEE 3P+E 32A			97901111
MLD.24.3.2				137	CEE 3P+N+E, 16A			97901110
MLD.32.3.2				137	CEE 3P+E 32A			97901113
MLD.32.3.2				137	CEE 3P+N+E, 16A			97901112
MLD.38.3.2				137	CEE 3P+E 32A			97901115
MLD.38.3.2				137	CEE 3P+N+E, 16A			97901114
MLD.12.1.4	560	270	190	133	CEE 2P+E 32A	1.5	10	97901116
MLD.12.3.4				129	CEE 3P+N+E, 16A			97901117
MLD.15.1.4				134	CEE 2P+E 32A			97901118
MLD.15.3.4				128	CEE 3P+N+E, 16A			97901119
MLD.22.3.4				135	CEE 3P+N+E, 16A			97901120
MLD.24.3.2				141	CEE 3P+N+E, 16A			97901121
MLD.32.3.2				141	CEE 3P+N+E, 16A			97901122
MLD.38.3.2				141	CEE 3P+N+E, 16A			97901123

Electrical data

MULTILIFT	Duty	Voltage [V] [19]	Power P1 / P2 [kW]	$I_{1/1}$ / I_{start} [A]	rpm [min^{-1}]	Number of poles	Starting method
MLD.12.1.4	S3-40 %, 1 min.	1 × 230 V	1.9 / 1.4	9 / 39	1430	4	DOL
MLD.12.3.4		3 × 400 V	1.8 / 1.5	3.6 / 19			
MLD.15.1.4		1 × 230 V	2.2 / 1.6	10.1 / 39	1410	4	
MLD.15.3.4		3 × 400 V	2.1 / 1.7	4.0 / 19			
MLD.22.3.4	S3-50 %, 1 min.	3 × 230 V	3.0 / 2.5	10.2 / 51.5	1430	4	
MLD.22.3.4		3 × 400 V		5.5 / 29.7			
MLD.24.3.2		3 × 230 V	3.1 / 2.7	9.7 / 88.7	2920	2	
MLD.24.3.2		3 × 400 V		5.5 / 39			
MLD.32.3.2		3 × 230 V	4.0 / 3.4	88.7	2920	2	
MLD.32.3.2		3 × 400 V		6.7 / 39			
MLD.38.3.2	S3-40 %, 1 min.	3 × 230 V	4.6 / 3.8	13 / 88.7	2880	2	
MLD.38.3.2		3 × 400 V		7.5 / 39			

[19] Tolerance: -10 % / +6 %

Performance curves

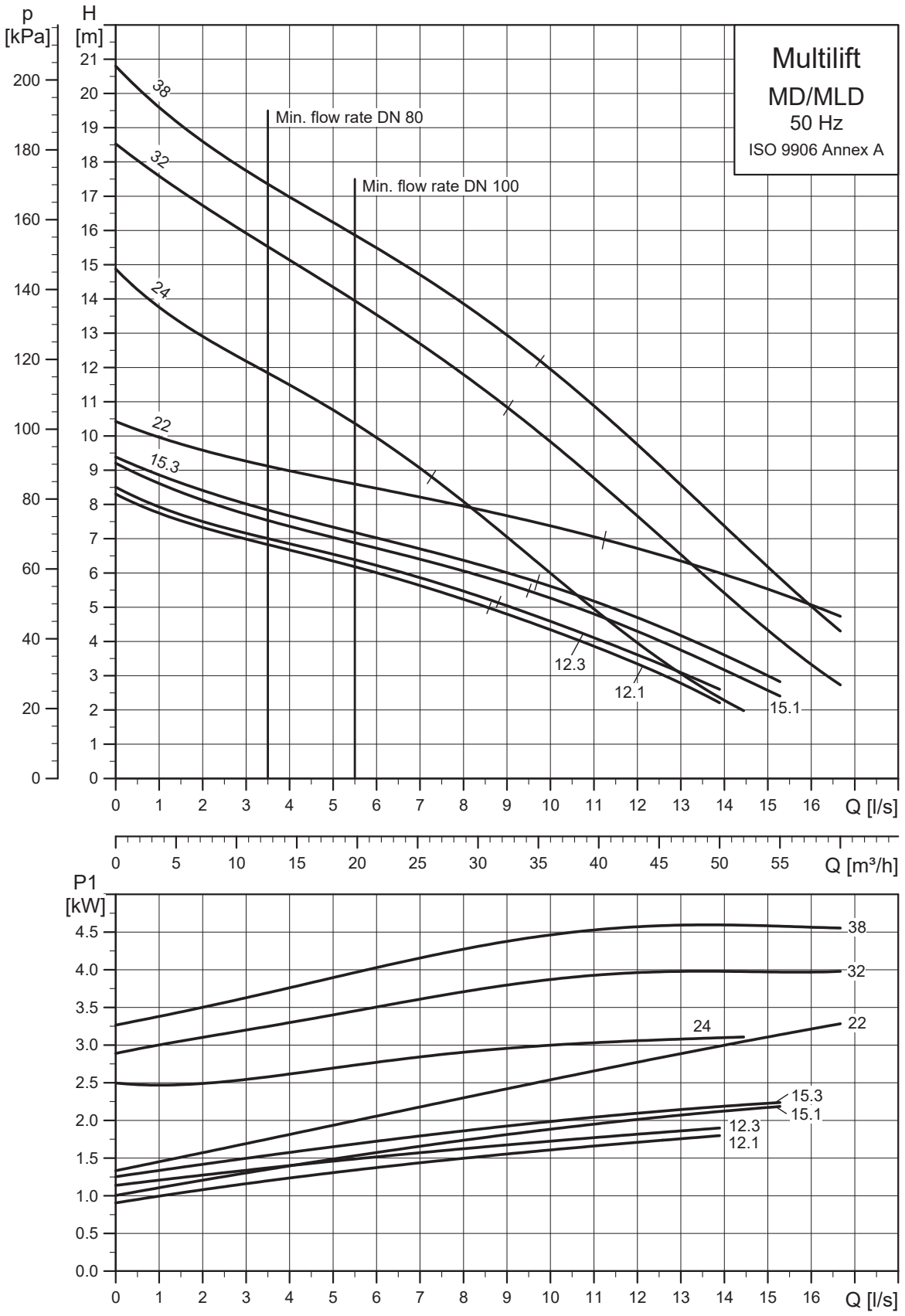

Dimensional drawings

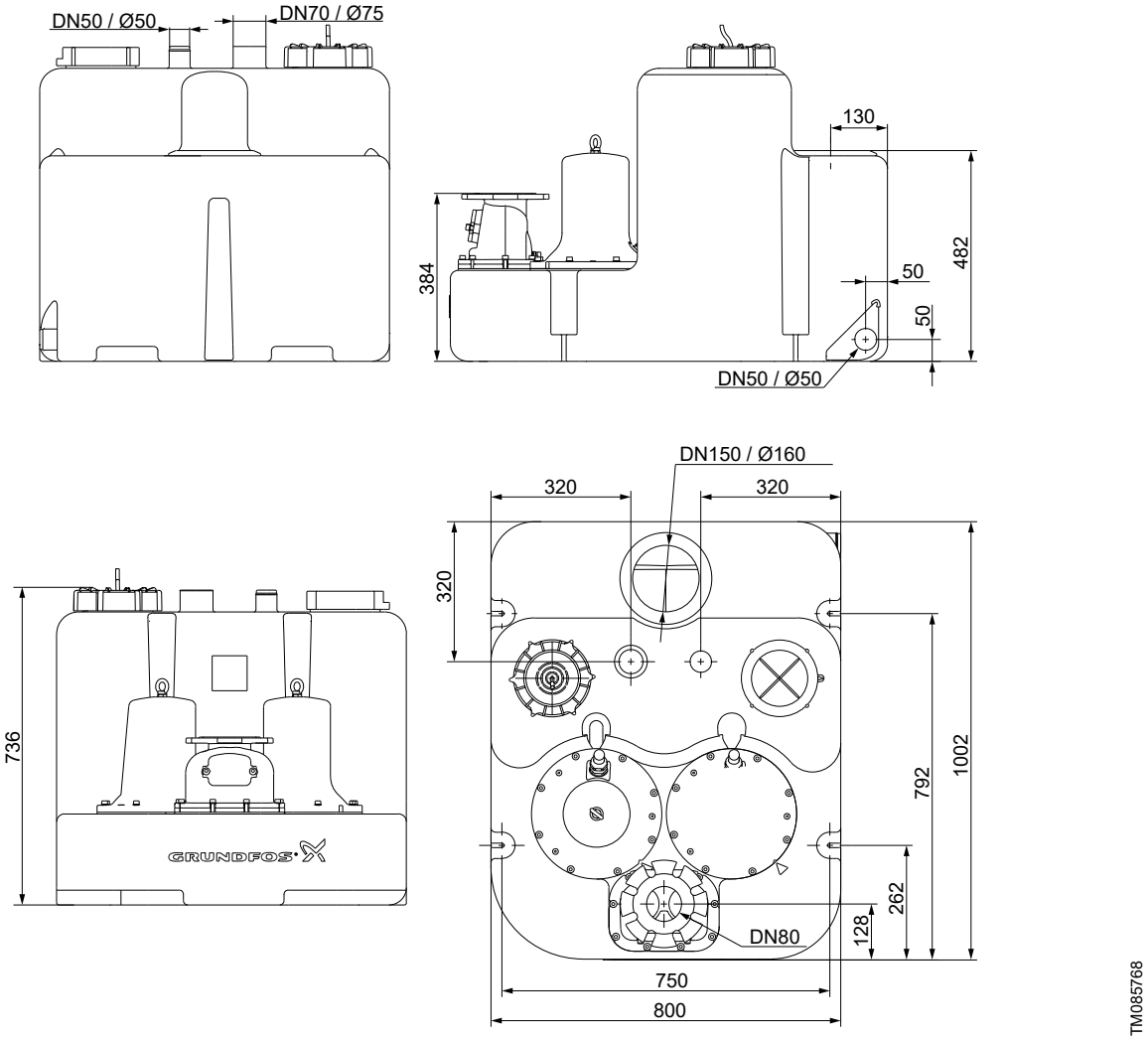

Accessories

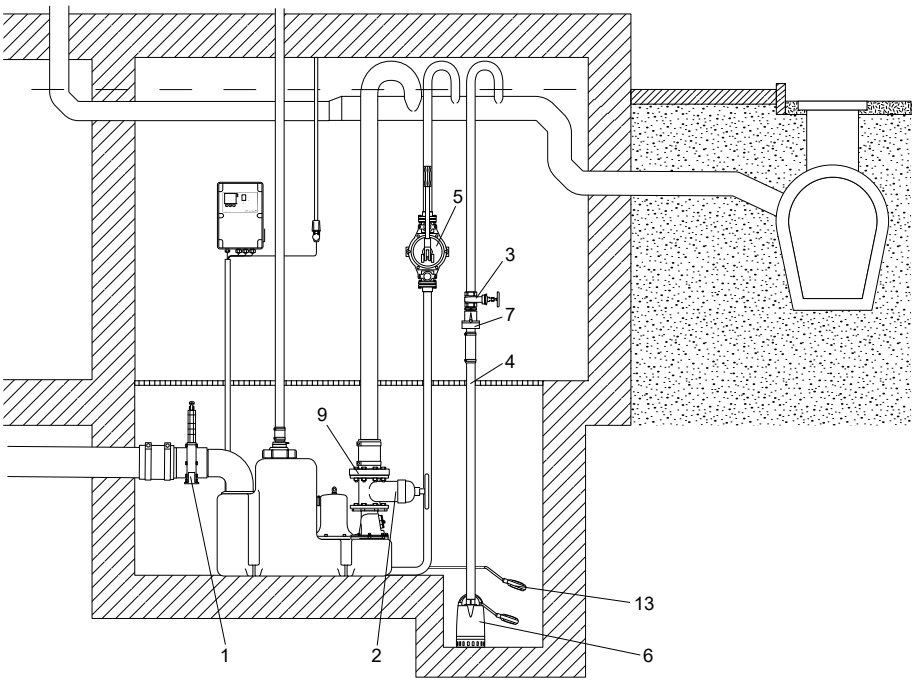

Accessories for MULTILIFT MLD

Pos.	Figure	Description	Dimensions	Product number
1	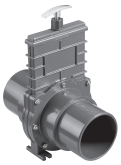	Isolating valve, PVC	DN 150 Installation length: 227 mm Height: 496 mm Connecting piece: ∅160	96697920
2		Isolating valve, epoxy-coated cast iron	DN 80 Installation length: 180 mm Height: 300 mm Connection: flange PN 10	96002011
3		Isolating valve, brass	DN 32 Length: 76 mm Connection: Rp 1 1/4"	00ID0918
4		Flexible connection with clamps for additional connections and inlets	DN 32 Length: 150 mm Internal ∅42	91071645
5		Manually operated diaphragm pump	Installation length: 435 mm Width: 234 mm Connection: Rp 1 1/2" Pumped volume per cycle: 0.65 litre Maximum suction lift: 4 m Maximum pump head: 20 m	96003721
6	For wastewater pump, for example, UNILIFT CC and KP, see data booklet for the pump or Grundfos Product Center.			
7		Non-return flap valve, composite	Length: 90 mm Height: 90 mm Connection: Rp 1 1/4"	96005308

Pos.	Figure	Description	Dimensions	Product number
8		Socket seal for additional inlet	DN 50 Internal ∅48-50	98079669
9		Bolts, nuts, 8 of each (galvanised) Gasket	M16 × 65 mm DN 80	96001999
N/A		Hole saw	∅43 mm × 33 mm	99865001
			∅102 mm × 38 mm	96571536
			∅153 mm × 38 mm	99865057
N/A		Signal lamp for wall mounting	1 × 230 V, 50 Hz	91077209
N/A		Signal horn	Indoors, 1 × 230 V, 50 Hz	62500021
			Outdoors, 1 × 230 V, 50 Hz	62500022
13		Level switch type SAS	Cable length 5 m, 250 V	00ID7805
N/A		External main switch for supply cable	Up to 25 A	96002511
N/A		Vent valve (with filter)	DN 70/80/100	98059596
N/A	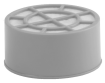	Filter kit for vent valve	DN 70/80/100	98059594
N/A		Wall installation box for vent valve	204 × 204 × 130 mm	98059598
N/A	-	Pressure hose for sensor, as a replacement	30 m 8 × 1.25 mm	98403665

9. MULTILIFT MDG

MULTILIFT MDG is designed according to EN 12050-1 and approved by an external institute. It is supplied complete and ready to install.

MULTILIFT MDG is equipped with two grinder pumps (SEG) which is necessary when high heads are required or long distances through a building must be overcome with small pipes.

TM085547

MULTILIFT MDG

Applications

MULTILIFT MDG is a compact and reliable lifting station with easy-to-operate controller for pumping of domestic wastewater (with faeces) in multifamily houses as well as in public and commercial buildings, such as offices, schools, hotels and restaurants.

MULTILIFT MDG is typically used for the following:

- basement installation below sewer level
- renovation or modernisation of existing buildings, for example, developing basements with fitness room, sauna, bath and washroom
  - direct connection of wall-hung or floor-standing toilets with horizontal outlet according to EN 33/EN 37.

TM051772

Example of installation of MULTILIFT MDG in a pit in the building's basement

Sizing guide

The table above shows the sizing guide with maximum length of vertical and horizontal pipes depending on the internal pipe diameter and the duty point. The non-return valve, an isolating valve and four bends have been taken into account. The limit of use is based on the self cleaning velocity of 0.7 m/s.

	Max. pipe length of vertical and horizontal outlet pipes						
Q [l/s]	**0.6** [20]	**0.9** [21]	**2**	**3**	**4**		
40 m	293	77	-	-	-	DN 40	MDG. 40
	63	-	-	-	-	DN 32	
30 m	1246	506	56	-	-	DN 40	MDG. 40
	373	143	-	-	-	DN 32	
	280	78	-	-	-	DN 40	MDG. 31
	65	3	-	-	-	DN 32	
20 m	2199	935	151	45	9	DN 40	MDG. 40
	683	291	37	2	-	DN 32	
	1233	507	63	4	-	DN 40	MDG. 31
	376	151	7	-	-	DN 32	
	824	323	23	-	-	DN 40	MDG. 26
	246	90	-	-	-	DN 32	
	373	126	-	-	-	DN 40	MDG. 15
	102	26	-	-	-	DN 32	
15 m	2675	1150	198	69	24	DN 40	MDG. 40
	838	364	56	13	-	DN 32	
	1709	722	110	28	-	DN 40	MDG. 31
	531	224	26	-	-	DN 32	
	1301	538	71	10	-	DN 40	MDG. 26
	401	164	13	-	-	DN 32	
	849	341	32	-	-	DN 40	MDG. 15
	257	99	-	-	-	DN 32	
	359	124	-	-	-	DN 40	MDG. 12
	101	28	-	-	-	DN 32	
10 m	3152	1364	245	93	40	DN 40	MDG. 40
	993	438	76	25	7	DN 32	
	2185	936	158	52	16	DN 40	MDG. 31
	686	298	46	10	-	DN 32	
	1777	752	118	34	6	DN 40	MDG. 26
	556	237	32	4	-	DN 32	
	1326	555	79	16	-	DN 40	MDG. 15
	412	173	19	-	-	DN 32	
	836	339	37	-	-	DN 40	MDG. 12
	256	102	5	-	-	DN 32	
	179	47	-	-	-	DN 40	MDG. 09
	47	7	-	-	-	DN 32	

Max. pipe length of vertical and horizontal outlet pipes							
Q [l/s]	**0.6** [20]	**0.9** [21]	**2**	**3**	**4**		
5 m	3628	1579	293	117	56	DN 40	MDG. 40
	1148	511	95	36	15	DN 32	
	2662	1151	205	76	32	DN 40	MDG. 31
	841	371	65	22	7	DN 32	
	2253	967	165	58	22	DN 40	MDG. 26
	711	311	52	16	4	DN 32	
	1802	770	127	40	10	DN 40	MDG. 15
	567	247	39	10	-	DN 32	
	1312	553	85	21	-	DN 40	MDG. 12
	411	176	24	3	-	DN 32	
	655	261	26	-	-	DN 40	MDG. 09
	202	80	4	-	-	DN 32	

[20] Required min. flow for v = 0.7 m/s at DN 32

[21] Required min. flow for v = 0.7 m/s at DN 40

Construction

MULTILIFT MDG

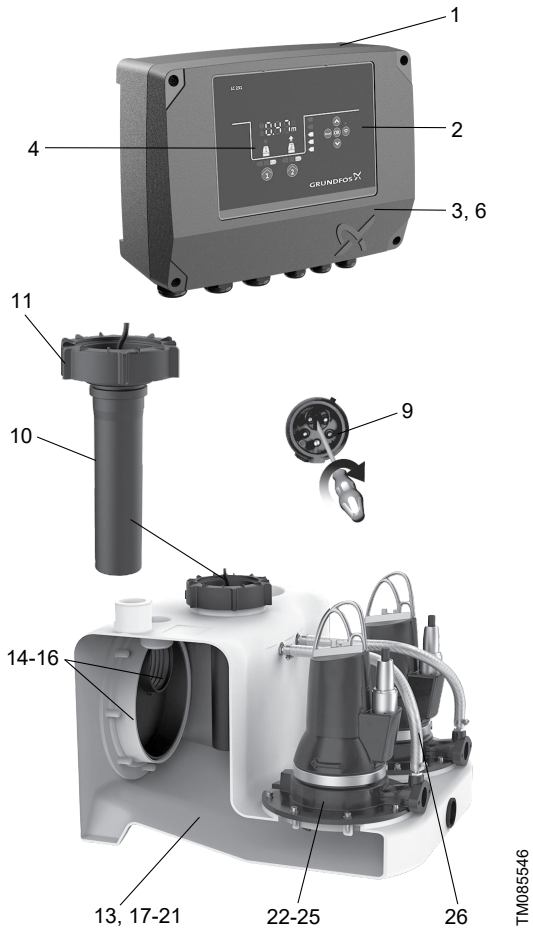

Description

Pos.	Controller
1	Pre-assembled and ready to operate with all necessary presettings - only the inlet level needs to be set
2	Controller with LED display, multiple motor protection features and further safety options
3	Potential-free contact for common alarm (inside)
4	External alarm can be used, for example, to monitor the installation room or well around the lifting station with separate float switch outside the tank to detect groundwater intake, water pipe burst or other flooding accidents; no extra alarm device needed.
6	Connection of Grundfos GO for further information and adjustments
9	Phase inverter for easy changing of phases (only three-phase versions)
Pos.	**Level sensor**
10	No moving parts in pumped liquid. Blockage-free pressure tube connected via a pressure hose to the pressure sensor in the controller.
11	Screw cap for pressure tube fixation and tank inspection cover, enabling easy maintenance of pressure tube and inspection of collecting tank
Pos.	**Collecting tank**
13	Design and volume adapted to multifamily house and commercial applications
14	Possible to connect inlets from all directions and to connect floor-standing and wall-hung toilets; ideal for replacement and new installation
15	Unique, patented inlet disk, DN 100 (DN 150 as accessory), for stepless adjustment to inlet levels from 180 to 315 mm
16	Sockets for space saving installation
17	Wastewater-resistant and odour-free, seamless collecting tank made of polyethylene (PE) with strong walls
18	Sedimentation-free tank bottom with chamfers, leading the wastewater to the pump to reduce the need of cleaning the tank
19	Pressure-tight design up to 5 m water column according to EN 12050-1
20	Suitable for liquid temperature up to 50 °C (up to 90 °C for short periods)
21	Easy handling during transportation and installation
Pos.	**Pump**
22	Submersible stainless steel pump with highly reliable grinder system and adjustable, semi-open, radial impeller
23	Clamp solution as a quick-release fastener makes it easy to separate motor from pump housing in case of service or maintenance.
24	Motor protection with built-in thermal switch and thermal motor circuit breaker
26	Mechanical shaft seal in a cartridge for safe and quick replacement and a chamber filled with non toxic oil to ensure reliable, long service life
27	Self-venting pump housing due to hydraulic design

Product description

Features

- Complete, pre-assembled and ready to install
- patented, turnable inlet disk enabling flexible connections from 180 to 315 mm inlet levels - ideal for new installations and replacements
- seven different inlet connections on all sides offer maximum installation flexibility
- eight different motor sizes for perfect adjustment to the required draining performance
- easy-to-operate LC 231 controller with outstanding motor protection and additional safety and service functions.
- highly reliable grinder pump for pressurized operation
- one backup pump for high operating safety
- reliable, blockage-free level detection with no direct contact to the pumped liquid
- easy and smart maintenance and service features for pumps, sensor tube, collecting tank and controller.

Related information

Construction

LC 231, LC 241 Level controller

Scope of delivery

Grundfos MULTILIFT MOG (one pump) and MULTILIFT MDG (two pumps) lifting stations are supplied complete with collecting tank, a sensor unit with cable and one or two pumps with cable, connected to the level controller. The controller includes a power cable with plug.

An accessories bag containing the following items is also included:

- 1 × installation and operating instructions
- 2 × oval outlet flanges, Rp 1 1/4"
- 1 × flexible hose, DN 70, and two clamps to connect the vent pipe
- 2 × screw and expansion anchor for tank fixation
- 3 × screw and washer for fastening a pipe plug in the inlet disk, if required
- 1 × socket seal, DN 100
- 1 × socket seal, DN 50, for diaphragm pump connection or inlet, DN 50.

Type key

Example: MLD.22.3.4

Code	Designation	Explanation
M	MULTILIFT lifting station	Type range
[ ]	Standard tank	Tank size
L	Large tank	
[ ]	One pump	Number of pumps
D	Two pumps	
OG	One grinder pump	
DG	Two grinder pumps	
22	Power [W]	Output power, P_2 / 100 [W]
1	Singe-phase motor	Number of phases
3	Three-phase motor	
2	2-pole motor	Number of poles
4	4-pole motor	

Collecting tank

The gas-, odour- and pressure-tight collecting tank is made of wastewater-resistant polyethylene (PE) and has all necessary ports for the connection of inlet pipes, outlet pipe, vent pipe and a manually operated diaphragm pump, which is available as an accessory.

The main inlet on the rear side of the collecting tank is designed as a turnable disk, DN 100 (optional DN 150), adjustable to any inlet level between 180 and 315 mm.

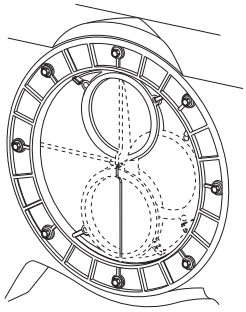

TM073993

Main inlet with eccentric disk

The tank volume and effective volume (volume between start and stop) of the collecting tank appear from the following table:

Inlet level [mm]	Total tank volume [l]	Effective tank volume [l]
180	93	23
250		37
315		50

Setting to the relevant inlet level must be made via the operating panel of the controller. The factory-set inlet level is 250 mm above the floor.

Pump

The submersible cast-iron pumps are equipped with a grinder system made of stainless steel. The semi-open, cast-iron, radial impeller is used in applications requiring a relatively high pressure. The impeller can be adjusted to the pump housing to keep the optimum efficiency.

The pump has a mechanical shaft seal with an oil chamber, filled for life with non-toxic oil. The shaft seal is of the cartridge type, making it possible to replace the shaft seal in the field without using special tools. The clamp securing the motor to the pump housing is made of stainless steel and enables easy dismantling of the motor for service and maintenance.

Single-phase motors are protected by a thermal switch in the windings and run via a capacitor inside the controller cabinet. Three-phase motors are protected by a thermal switch in the windings and an additional thermal circuit breaker in the controller cabinet.

If the motor is overloaded, it stops automatically. When it has cooled to normal operating temperature, it restarts automatically when automatic reset is set at the controller (factory setting).

The cable connection is a plug solution made of stainless steel.

In case of high inflow, the pump can start 60 times per hour. The start and stop sequence must correspond to intermittent duty.

Related information

Electrical data
LC 231, LC 241 Level controller

Technical data

General data

Parameter	Value
Free passage	Grinder
Liquid temperature	Max. 40 °C For short periods up to 60 °C (max. 5 minutes per hour)
Ambient temperature	0-40 °C
pH-value	4-10
Max. density of pumped liquid	1,100 kg/m^3
Enclosure class (lifting station and motor)	IP68 (2 m water column for 7 days)
Enclosure class (controller)	IP55
Insulation class (motor)	F (155 °C)
Voltage (motor)	1 × 230 V 3 × 230 V 3 × 400 V
Frequency (motor)	50 Hz
Potential-free contacts	NO/NC, max. 250 VAC / 2 A
Voltage (sensor)	12 V
Signal output (sensor)	0-5 V
Power consumption (controller)	2 W
Number of starts per hour	Max. 60
Sound pressure level	76 dB(A)
Dimensions (controller)	Height = 390 mm Width = 262 mm Depth = 142 mm

Related information

Dimensional drawings

Material specification

Component	Material
Collecting tank	Polyethylene (PE)
Pump housing	Cast iron
Impeller	Cast iron
Shaft	Stainless steel 1.4301
Shaft seal	Primary seal (0.9 - 1.5 kW): SiC/SiC Secondary seal (0.9 - 1.5 kW): Lip seal, NBR Primary seal (2.6 - 4.0 kW): SiC/SiC Secondary seal (2.6 - 4.0 kW): Carbon/aluminium oxide Other components: NBR rubber, stainless steel
Control cabinet	Acrylonitrile butadiene styrene (ABS)
Screws	Stainless steel 1.4301
O-rings	NBR rubber
Cable	H07RN-F

Mechanical data and order data

MULTILIFT	Inlet level [mm]	Tank volume [l]	Effective tank volume [l]	Weight [kg]	Plug type	Cable length between plug and controller [m]	Cable length between motor and controller [m]	Product number
MDG.09.3.2	180 / 250 / 315	93	23 / 37 / 50	112	CEE 3P+N+E, 16A	1.5	10	97901137
MDG.12.3.2				113	CEE 3P+N+E, 16A			97901139
MDG.15.3.2				113	CEE 3P+E 16A			97901141
MDG.15.3.2				113	CEE 3P+N+E, 16A			97901140
MDG.26.3.2				151	CEE 3P+E, 16A			97901143
MDG.26.3.2				151	CEE 3P+N+E, 16A			97901142
MDG.31.3.2				167	CEE 3P+E 16A			97901145
MDG.31.3.2				167	CEE 3P+N+E, 16A			97901144
MDG.40.3.2				167	CEE 3P+E 16A			97901147
MDG.40.3.2				167	CEE 3P+N+E, 16A			97901146

Electrical data

MULTILIFT	Duty	Voltage [V]	Power P1 / P2 [kW]	$I_{1/1}$ / I_{start} [A]	rpm [min^{-1}]	Number of poles	Starting method
MDG.09.3.2	S3 - 35 %	3 × 400 V	1.4 / 0.9	2.6 / 21	2860	2	DOL
MDG.12.3.2		3 × 400 V	1.8 / 1.2	3.1 / 21	2750		
MDG.15.3.2		3 × 230 V	2.3 / 1.5	6.6 / 36	2700		
MDG.15.3.2		3 × 400 V		3.8 / 21	2700		
MDG.26.3.2		3 × 230 V	3.7 / 2.6	9.2 / 57	2870		
MDG.26.3.2		3 × 400 V		5.3 / 33	2870		
MDG.31.3.2	S3 - 30 %	3 × 230 V	3.9 / 3.1	10.9 / 74	2900		
MDG.31.3.2		3 × 400 V		6.3 / 43	2900		
MDG.40.3.2		3 × 230 V	5.2 / 4.0	14.2 / 74	2830		
MDG.40.3.2		3 × 400 V		8.2 / 43	2830		

Performance curves

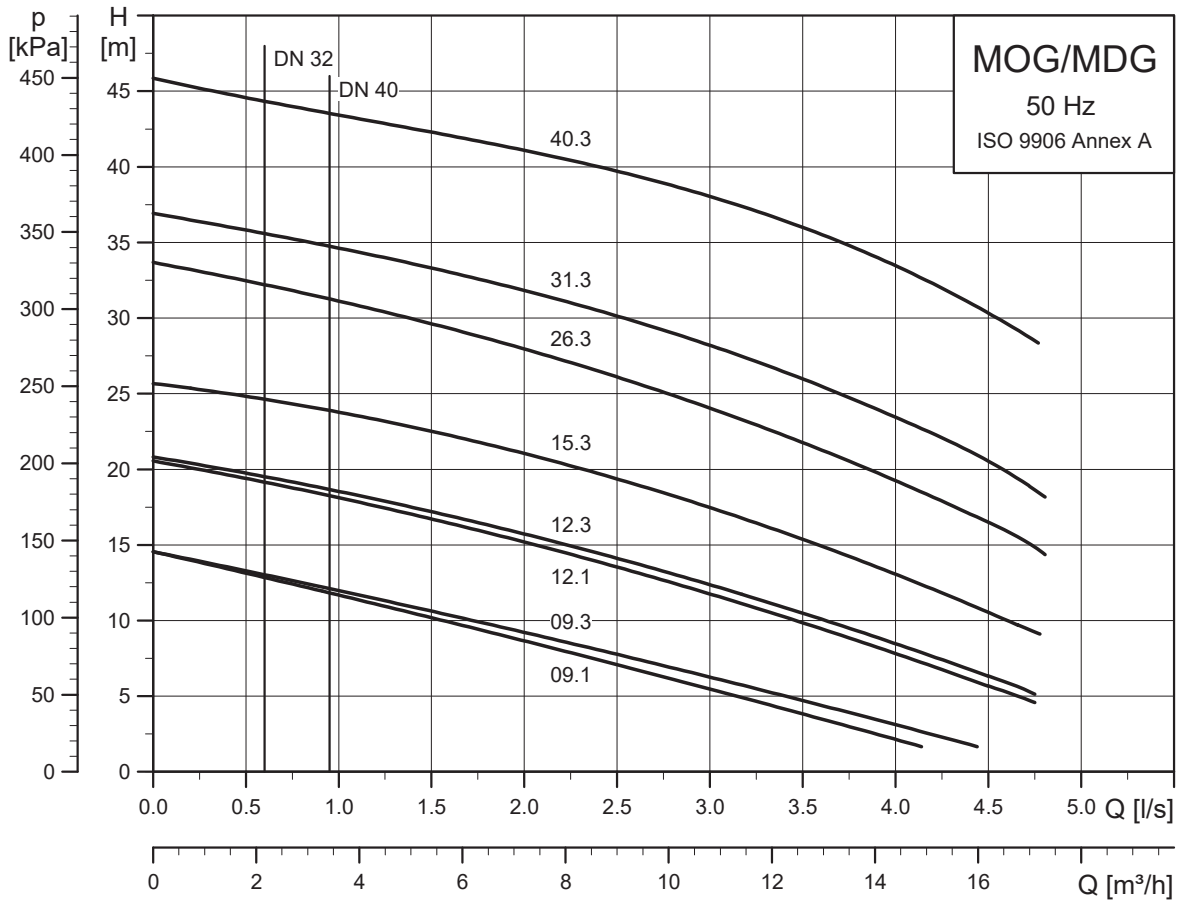

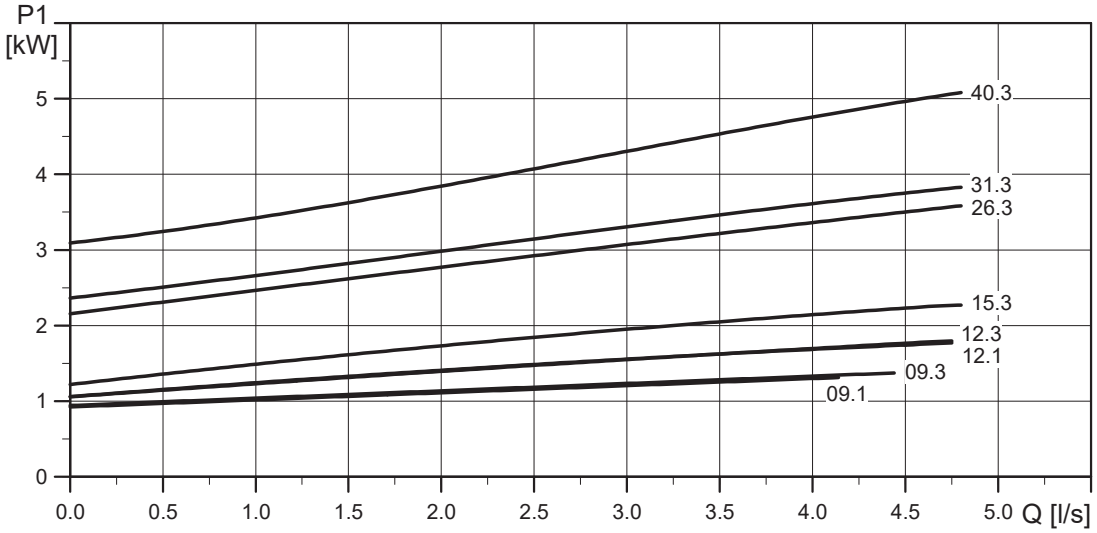

TM051396

Dimensional drawings

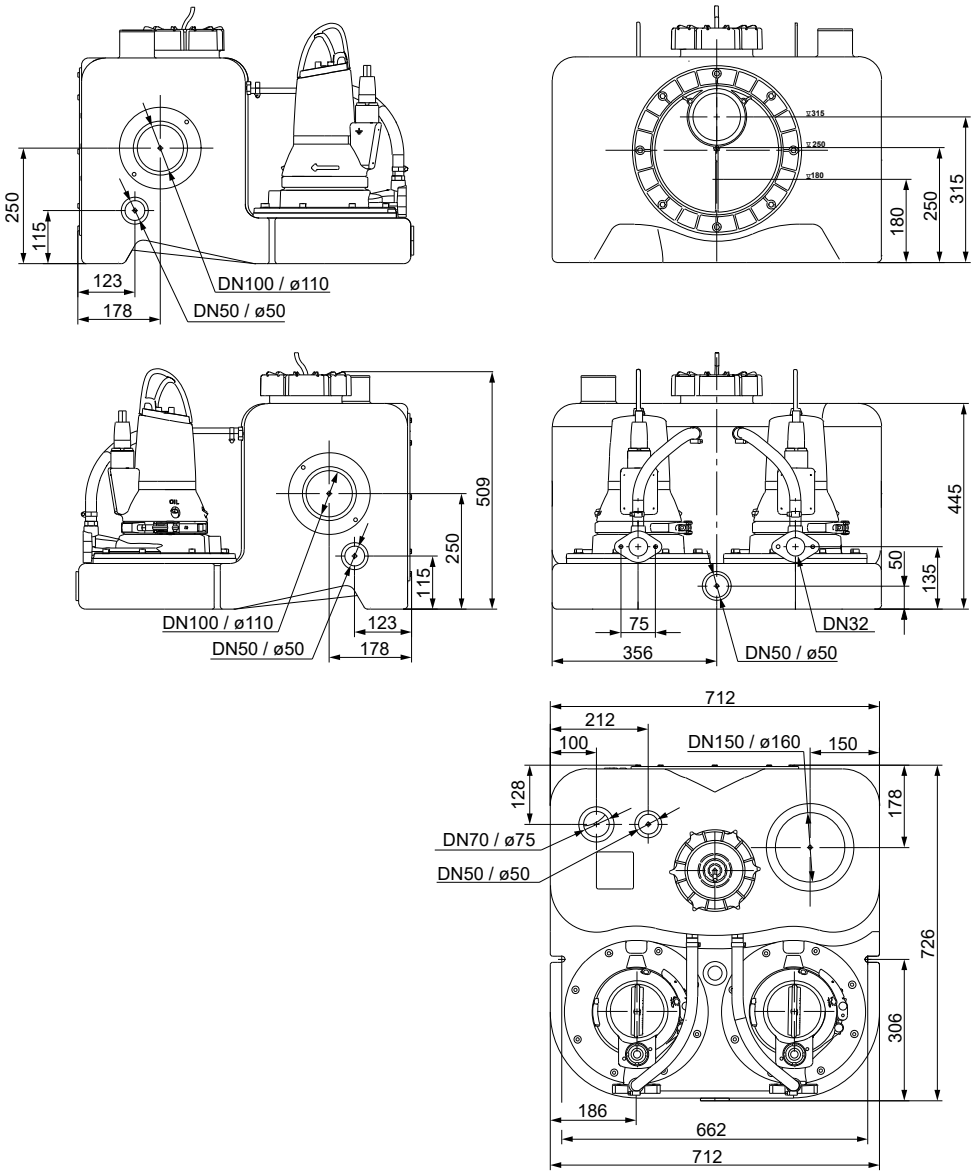

TM085769

Accessories

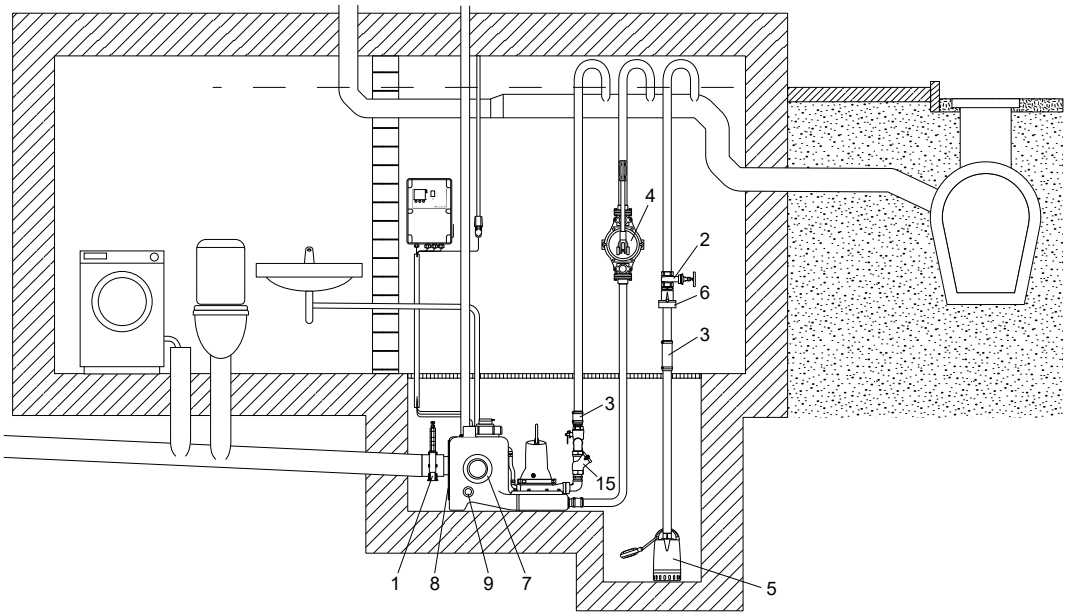

Accessories for MULTILIFT MDG

Pos.	Figure	Description	Dimensions	Product number
1		Isolating valve, PVC	DN 100 Installation length: 130 mm Height: 375 mm Connecting piece: ∅110	96615831
2		Isolating valve, brass	DN 32 Length: 76 mm Connection: Rp 1 1/4"	00ID0918
3		Flexible connection with clamps for additional connections and inlets	DN 32 Length: 150 mm Internal ∅42	91071645
4		Manually operated diaphragm pump	Installation length: 435 mm Width: 234 mm Connection: Rp 1 1/2" Pumped volume per cycle: 0.65 litre Maximum suction lift: 4 m Maximum pump head: 20 m	96003721
5	For wastewater pump, for example, UNILIFT CC and KP, see data booklet for the pump or Grundfos Product Center.			
6		Non-return flap valve, composite	Length: 90 mm Height: 90 mm Connection: Rp 1 1/4"	96005308
7		Socket seal for additional standard inlet	DN 100 Internal ∅110	97726942
		Socket seal for additional inlet (vertical inlet on top)	DN 150, internal ∅160	96636544

Pos.	Figure	Description	Dimensions	Product number
8	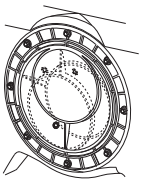	Turnable inlet disk with socket seal for adjustable inlet level	DN 150 Internal ∅160	98079681
9		Socket seal for additional inlet	DN 50 Internal ∅48-50	98079669
N/A		Hole saw	∅43 mm × 33 mm	99865001
			∅102 mm × 38 mm	96571536
			∅153 mm × 38 mm	99865057
N/A		Signal lamp for wall mounting	1 × 230 V, 50 Hz	91077209
N/A		Signal horn	Indoors, 1 × 230 V, 50 Hz	62500021
			Outdoors, 1 × 230 V, 50 Hz	62500022
13		Level switch type SAS	Cable length 5 m, 250 V	00ID7805
N/A		External main switch for supply cable	Up to 25 A	96002511
15	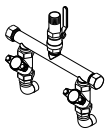	1 1/2" complete pre-assembled pipework, including: • 1 × flexible connection with 2 clamps, DN 32 (not shown, see pos. 3) • 1 × hose nozzle, Rp 1 1/2 / DN 40 • 1 × ball valve, R 1 1/2 • 1 × cross piece, Rp 1 1/2 • 1 × blind cover, Rp 1 1/2 • 2 × long nipple, R 1 1/2 • 2 × bend 90°, Rp 1 1/2 / R 1 1/2 • 2 × double nipple, R 1 1/2 • 2 × non-return ball valve, R 1 1/2 • 2 × bend 90°, Rp 1 1/2 / R 1 1/4 • (Pipework can be set in 1 1/4" / DN 32 locally)		98085358
N/A		Non-return ball valve, Rp 1 1/4, made of cast iron with epoxy coating, to be mounted on installation site	Length: 140 mm Width: 83 mm	96116550
		Non-return ball valve, Rp 1 1/2, made of cast iron with epoxy coating	Length: 140 mm Width: 83 mm	96489972
N/A		Vent valve (with filter)	DN 70/80/100	98059596

Pos.	Figure	Description	Dimensions	Product number
N/A	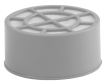	Filter kit for vent valve	DN 70/80/100	98059594
N/A		Wall installation box for vent valve	204 × 204 × 130 mm	98059598
N/A	-	Pressure hose for sensor, as a replacement	30 m 8 × 1.25 mm	98403665

10. MULTILIFT MD1, MDV

MULTILIFT MD1 and MDV are designed according to EN 12050-1 and approved by an external institute. They are supplied complete and ready to install with non-return valve.

TM044897

MULTILIFT MD1/MDV with SE pumps

TM047170

MULTILIFT MD1/MDV with SL pumps

Applications

MULTILIFT MD1 and MDV are reliable lifting stations with easy-to-operate controller for pumping of domestic wastewater (with faeces) in large-scale multifamily houses as well as in public and commercial buildings, such as offices, schools, hotels and restaurants.

MULTILIFT MD1 and MDV are typically used for the following:

- basement installation below sewer level
- renovation or modernisation of existing buildings, for example, developing basements with fitness room, sauna, bath and washroom.

Sizing guide

The table below shows the sizing guide for MULTILIFT MDV with maximum length of vertical and horizontal pipes depending on the internal pipe diameter and the duty point. The limit of use is based on the self cleaning velocity of 0.7 m/s. DN 80 pipework requires a flow of min. 3.5 l/s and DN 100 pipework requires a flow of min. 5.5 l/s. The non return-valve, an isolating valve and four bends have been taken into account.

	Max. pipe length of vertical and horizontal outlet pipes								
Q [l/s]	**3.5** [22)]	**5.5** [23)]	**7**	**9**	**11**	**13**	**15**		
38 m	-	-	-	-	-	-	-	DN 100	MDV.80.80.110
	37	-	-	-	-	-	-	DN 80	
34 m	-	508	222	40	-	-	-	DN 100	MDV.80.80.110
	489	138	46	-	-	-	-	DN 80	
30 m	-	1083	579	258	94	-	-	DN 100	MDV.80.80.110
	940	332	169	63	9	-	-	DN 80	
	-	227	37	-	-	-	-	DN 100	MDV.80.80.92
	281	48	-	-	-	-	-	DN 80	
25 m	-	1801	1025	529	277	132	42	DN 100	MDV.80.80.110
	1504	573	322	159	75	26	-	DN 80	
	-	945	482	187	38	-	-	DN 100	MDV.80.80.92
	845	289	140	43	-	-	-	DN 80	
	-	481	195	5	-	-	-	DN 100	MDV.80.80.75
	475	136	43	-	-	-	-	DN 80	
18 m	-	2806	1649	910	534	318	183	DN 100	MDV.80.80.110
	2294	911	536	292	167	94	49	DN 80	
	-	1951	1107	568	295	140	34	DN 100	MDV.80.80.92
	1635	627	354	176	85	33	-	DN 80	
	-	1487	819	385	162	21	-	DN 100	MDV.80.80.75
	1265	474	257	115	40	8	-	DN 80	
	-	704	299	49	-	-	-	DN 100	MDV.80.80.60
	712	214	83	-	-	-	-	DN 80	
	-	413	58	-	-	-	-	DN 100	MDV.80.80.40
	578	118	-	-	-	-	-	DN 80	
12 m	-	3668	2184	1236	754	477	304	DN 100	MDV.80.80.110
	2971	1200	720	407	246	153	94	DN 80	
	-	2812	1642	894	515	299	155	DN 100	MDV.80.80.92
	2312	917	537	291	165	92	43	DN 80	
	-	2348	1354	711	383	180	61	DN 100	MDV.80.80.75
	1942	763	441	229	119	51	10	DN 80	
	-	1565	834	375	139	11	-	DN 100	MDV.80.80.60
	1389	504	266	115	36	-	-	DN 80	
	-	1275	593	157	-	-	-	DN 100	MDV.80.80.40
	1255	407	186	41	-	-	-	DN 80	
	-	328	13	-	-	-	-	DN 100	MDV.80.80.30
	500	93	-	-	-	-	-	DN 80	
	-	-	-	-	-	-	-	DN 100	MDV.80.80.22
	132	-	-	-	-	-	-	DN 80	

Max. pipe length of vertical and horizontal outlet pipes									
Q [l/s]	**3.5** [22]	**5.5** [23]	**7**	**9**	**11**	**13**	**15**		
6 m	-	4530	2719	1562	975	637	425	DN 100	MDV.80.80.110
	3648	1490	903	522	326	212	140	DN 80	
	-	3674	2177	1220	735	458	276	DN 100	MDV.80.80.92
	2989	1206	721	406	244	151	89	DN 80	
	-	3210	1889	1038	603	340	182	DN 100	MDV.80.80.75
	2619	1053	624	344	199	110	56	DN 80	
	-	2427	1369	701	359	170	67	DN 100	MDV.80.80.60
	2065	793	450	229	115	51	17	DN 80	
	-	2137	1128	483	178	35	-	DN 100	MDV.80.80.40
	1932	697	369	156	53	5	-	DN 80	
	-	1189	548	140	-	-	-	DN 100	MDV.80.80.30
	1177	383	174	39	-	-	-	DN 80	
	-	688	217	-	-	-	-	DN 100	MDV.80.80.22
	809	217	63	-	-	-	-	DN 80	

22) Required min. flow for v = 0.7 m/s at DN 80

23) Required min. flow for v = 0.7 m/s at DN 100

The table below shows the sizing guide for MULTILIFT MD1.80.80 with maximum length of vertical and horizontal pipes depending on the internal pipe diameter and the duty point. The limit of use is based on the self cleaning velocity of 0.7 m/s. DN 80 pipework requires a flow of min. 3.5 l/s and DN 100 pipework requires a flow of min. 5.5 l/s. The non-return valve, an isolating valve and four bends have been taken into account.

	Max. pipe length										
Q [l/s]	**3.5 [24)]**	**5.5 [25)]**	**10**	**15**	**20**	**25**	**30**	**35**	**40**		
21 m	-	31	-	-	-	-	-	-	-	DN 100	MD1.80.80.75
	105	-	-	-	-	-	-	-	-	DN 80	
18 m	-	481	67	-	-	-	-	-	-	DN 100	MD1.80.80.75
	444	133	5	-	-	-	-	-	-	DN 80	
15 m	-	930	210	57	9	-	-	-	-	DN 100	MD1.80.80.75
	782	278	52	5	-	-	-	-	-	DN 80	
	-	259	-	-	-	-	-	-	-	DN 100	MD1.80.80.55
	289	65	-	-	-	-	-	-	-	DN 80	
12 m	-	1379	354	124	48	15	-	-	-	DN 100	MD1.80.80.75
	1121	423	99	28	5	-	-	-	-	DN 80	
	-	709	128	16	-	-	-	-	-	DN 100	MD1.80.80.55
	627	210	28	-	-	-	-	-	-	DN 80	
	-	283	12	-	-	-	-	-	-	DN 100	MD1.80.80.40
	295	75	-	-	-	-	-	-	-	DN 80	
9 m	-	1825	498	191	87	41	16	-	-	DN 100	MD1.80.80.75
	1459	586	146	51	19	5	-	-	-	DN 80	
	-	1158	271	83	26	4	-	-	-	DN 100	MD1.80.80.55
	966	355	75	17	-	-	-	-	-	DN 80	
	-	732	156	38	-	-	-	-	-	DN 100	MD1.80.80.40
	633	219	39	3	-	-	-	-	-	DN 80	
	-	248	17	-	-	-	-	-	-	DN 100	MD1.80.80.30
	261	66	-	-	-	-	-	-	-	DN 80	
	-	10	-	-	-	-	-	-	-	DN 100	MD1.80.80.22
	54	-	-	-	-	-	-	-	-	DN 80	
6 m	-	2278	641	257	127	67	36	17	5	DN 100	MD1.80.80.75
	1798	712	193	73	33	15	6	-	-	DN 80	
	-	1607	415	149	65	30	12	-	-	DN 100	MD1.80.80.55
	1304	499	122	40	14	3	-	-	-	DN 80	
	-	1181	300	104	41	13	-	-	-	DN 100	MD1.80.80.40
	972	364	86	26	6	-	-	-	-	DN 80	
	-	698	161	46	9	-	-	-	-	DN 100	MD1.80.80.30
	599	210	42	8	-	-	-	-	-	DN 80	
	-	460	88	10	-	-	-	-	-	DN 100	MD1.80.80.22
	393	135	20	-	-	-	-	-	-	DN 80	
	-	96	-	-	-	-	-	-	-	DN 100	MD1.80.80.15
	115	19	-	-	-	-	-	-	-	DN 80	
3 m	-	2727	785	324	166	93	55	32	17	DN 100	MD1.80.80.75

	Max. pipe length										
Q [l/s]	**3.5** [24]	**5.5** [25]	**10**	**15**	**20**	**25**	**30**	**35**	**40**		
	2136	857	240	96	47	25	14	7	2	DN 80	
	-	2057	559	216	105	56	31	15	5	DN 100	MD1.80.80.55
	1643	644	169	63	28	14	6	-	-	DN 80	
	-	1631	443	171	80	39	17	5	-	DN 100	MD1.80.80.40
	1310	509	133	49	21	8	-	-	-	DN 80	
	-	1147	304	113	48	17	-	-	-	DN 100	MD1.80.80.30
	938	355	89	31	11	-	-	-	-	DN 80	
	-	909	232	76	26	6	-	-	-	DN 100	MD1.80.80.22
	731	280	67	19	4	-	-	-	-	DN 80	
	-	545	119	29	-	-	-	-	-	DN 100	MD1.80.80.15
	453	164	31	4	-	-	-	-	-	DN 80	

[24] Required min. flow for v = 0.7 m/s at DN 80

[25] Required min. flow for v = 0.7 m/s at DN 100

Construction

MULTILIFT MD1/MDV

Pos.	Description
Pos.	**Controller**
1	Pre-assembled and ready to operate with all necessary presettings - only the inlet level needs to be set
2	Controller with LED display, multiple motor protection features and further safety options
3	Potential-free contact for common alarm (inside)
4	External alarm can be used, for example, to monitor the installation room or well around the lifting station with separate float switch outside the tank to detect groundwater intake, water pipe burst or other flooding accidents; no extra alarm device needed.
6	Connection of Grundfos GO for further information and adjustments
9	Phase inverter for easy changing of phases (only direct-on-line versions)
Pos.	**Level sensor**
10	No moving parts in pumped liquid. Blockage-free pressure tube connected via a pressure hose to the pressure sensor in the controller.
11	Screw cap for pressure tube fixation and tank inspection cover enabling easy maintenance of pressure tube and inspection of collecting tank
Pos.	**Collecting tank**
13	Large-volume, 450-litre collecting tanks extendable with extra tanks up to 1350 litres
14	Separate inspection cover for quick access to the tank
15	Socket sealing for space saving installation
16	Wastewater-resistant and odour-free, seamless collecting tank made of polyethylene (PE) with strong walls
17	Sedimentation-free tank bottom with chamfers, leading the wastewater to the pump to reduce the need of cleaning the tank
18	Pressure tight design up to 5 m water column according to EN 12050-1
19	Suitable for liquid temperature up to 50 °C
20	Easy handling during transportation and installation
Pos.	**Pump**
21	11 pump sizes within each pump range, SE and SL, adapted to all application needs
22	New, highly efficient S-tube impeller (SL1 or SE1), or Vortex impeller with large free passage for trouble-free operation and unchanged performance throughout the entire life of the pump (SLV or SEV)
23	Motor protection with built-in thermal switch
24	Quick and easy maintenance and service with clamp fixation between pump housing and motor
25	Double mechanical shaft seal in a cartridge and a chamber filled for life with non-toxic oil
26	Self-venting outlet
Pos.	**Accessories**
27	Special Y branch pipe with connecting piece, ∅90 (DN 80), ∅110 (DN 100) or ∅160 (DN 150), and flexible hose connection and clamps
28	High quality standard accessories - non-return and isolating valves of all sizes
29	Non-return valve with lifting device to drain outlet pipe in case of service or maintenance

Product description

Features

- High effective tank volume up to 3 × 450 litres
- 17 different motor sizes for perfect adjustment to the required draining performance
- easy-to-operate LC 241 controller with outstanding motor protection and additional safety and service functions.
- reliable, blockage-free level detection with no direct contact to the pumped liquid
- extremely high operating safety ensured by two different motor designs, both with same hydraulic design: SL and SE pumps with large free passage; SL pumps for intermittent operation, S3-50 %, for standard inflow applications; SE pumps suitable for continuous operation, S1, without any additional action (important in case it is difficult to calculate inflow or in case of lasting high inflow).
- two impeller types are available: Vortex, free-flow impeller for SLV/SEV; single-channel, high-efficiency, S-tube impeller for SL1/SE1.
- easy and smart maintenance and service features for pumps, sensor tube, collecting tank and controller.

Related information

Construction

LC 231, LC 241 Level controller

Scope of delivery

Grundfos MULTILIFT MD1 and MDV lifting stations are supplied complete with one or two collecting tank(s), two three-phase pumps, level sensor, and LC 241 controller. Both sensor and pumps are connected to the controller with 10 m cable and hose.

An accessories bag containing the following items is also included:

- 1 × installation and operating instructions
- 1 × socket seal, DN 150, for inlet
- 2 × vent flange, DN 80 or DN 100, with vent hose and fitting connection
- 1 × flexible hose, DN 70, and two clamps to connect the vent pipe
- 2 × socket seal, DN 100, for connection of inlet side of pump
- 2 × flange, DN 80 or DN 100, with connecting piece, DN 100 (outer diameter, 110 mm)
- 1 × flexible connecting piece, internal diameter, 50 mm, for diaphragm pump, 1 1/2" or DN 50 inlet PP pipe
- 2 × gasket kit, DN 80 or DN 100, 8 bolts M16 × 65, nuts and washers (galvanised)
- 3 × screw and expansion anchor for tank fixation.

Type key

Example: MD1.80.100.15.4.5OD/400-2SE

Code	Designation	Explanation
M	MULTILIFT lifting station	Type range
D	Two pumps	Number of pumps
1	Single-channel impeller	Impeller type
V	Vortex impeller (SuperVortex)	
80	Maximum solids size [mm]	Free passage
100	Nominal diameter of pump outlet port [mm]	Pump outlet port
22	Power [W]	Output power, P_2 / 100 [W]
2	2-pole motor	Number of poles
4	4-pole motor	
5	50 Hz	Frequency
0D	380-415 V, DOL	Voltage and starting method
1D	380-415 V, Y/D	
0E	220-240 V, DOL	
1E	220-240 V, Y/D	
400	Number of litres	Size of collecting tank
[ ]	One tank	Number of collecting tanks
2	Two tanks [26]	
SE	SE pump	Pump type
SL	SL pump	

[26] A third tank is available as accessory if the effective volume of the standard lifting station is too small.

Collecting tank

The gas-, odour- and pressure-tight collecting tank is made of wastewater-resistant polyethylene (PE) and has three horizontal inlet ports, DN 150 (inlet level, 700 mm), 1 vertical inlet port, DN 100, 1 connection port, DN 70, for vent line, two ports, ∅40/50, for additional connections, two ports, ∅110, for inlet line of the pumps and a large maintenance opening.

The tank volume and effective volume (volume between start and stop) of the collecting tank appear from the following table:

Number of collecting tanks	Total tank volume [l]	Effective tank volume [l]
1	450	240
2	900	480
3	1350	720

Setting to the relevant inlet level must be made via the operating panel of the controller. The factory-set inlet level is 700 mm above the floor.

Pump

- Single-stage, submersible pumps in horizontal installation with a free passage of 65 or 80 mm (100 mm on request)
- direct drive with motor and pump mounted on common, particularly rigid shaft for vibration-free operation
- vertical outlet port, DN 80 or DN 100 (PN 10)
- pump and motor connected by stainless-steel clamp for easy service
- Vortex impeller for SLV/SEV
- high-efficiency, single-channel, S-tube impeller for SL1/SE1
- watertight, moulded, stainless-steel cable entry with integrated insertion coupling.

The pressure-tight motor is integrated in the pump housing and is enclosure class IP68.

Three-phase motors are protected by a thermal switch in the windings and an additional thermal circuit breaker in the controller cabinet.

If the motor is overloaded, it stops automatically. When it has cooled to normal operating temperature, it restarts automatically when automatic reset is set at the controller (factory setting).

The cable connection is a plug solution made of stainless steel.

Starting method of motors is either direct (DOL) or star/delta (SD) as from 5 kW.

Motor bearings are maintenance-free, heavy single-row or double-row angular contact ball bearings lubricated for life.

Duty types:

- SL: intermittent operation, S3-50 %
- SE: continuous operation, S1, due to patented motor cooling design, or intermittent operation, S3-50 %.

The double mechanical shaft seal system is integrated in a stainless-steel cartridge. The seal faces are made of SiC/SiC on the liquid side and synthetic carbon/ceramic on the motor side. The seal system is mounted in an oil chamber and hermetically separated from the pumped liquid. The dry-running safe, service-friendly cartridge design allows the removal of the complete component in only a few simple steps.

Related information

LC 231, LC 241 Level controller

Technical data

General data

Parameter	Value
Free passage	65/80 mm
Liquid temperature	Max. 40 °C For short periods up to 60 °C (max. 5 minutes per hour)
Ambient temperature	0-40 °C
pH-value	4-10
Max. density of pumped liquid	1,100 kg/m^3
Enclosure class (lifting station and motor)	IP68 (2 m water column for 7 days)
Enclosure class (controller)	≤4 kW: IP55 >4 kW: IP54
Insulation class (motor)	F (155 °C)
Voltage (motor)	3 × 400 V
Frequency (motor)	50 Hz
Potential-free contacts	NO/NC, max. 250 VAC / 2 A
Voltage (sensor)	12 V
Signal output (sensor)	0-5 V
Power consumption (controller)	2 W
Number of starts per hour	Max. 60
Sound pressure level	< 70 dB(A)
Dimensions (controller for ≤ 4 kW)	Height = 390 mm Width = 262 mm Depth = 142 mm
Dimensions (controller for > 4 kW)	Height = 680 mm Width = 380 mm Depth = 350 mm

Related information

Dimensional drawings

Material specification

Component	Material
Collecting tank	Polyethylene (PE)
Pump housing	Cast iron
Clamp	Stainless steel
Impeller	Cast iron
Stator housing	Aluminium G-ALSI 12 (SE) Cast iron (SL)
Control cabinet (≤ 4 kW)	Acrylonitrile butadiene styrene (ABS)
Screws	Stainless steel 1.4301
O-rings	NBR rubber
Cable	H07RN-F, cover PE

Mechanical, electrical and order data

Standard range, 3 × 380-415 V

The standard range is 3 × 380-415 V.
3 × 230 V variants are available on request.

TM044897

MULTILIFT MDV - with SEV pumps (SuperVortex, free-flow impeller)

MULTILIFT	Inlet level [mm]	Number of tanks and tank volume [l]	Effective tank volume [l]	Weight [kg]	Power P1 / P2 [kW]	$I_{1/1}$ / I_{start} [A]	Number of poles	Voltage [V]	Starting method	Product number
MDV.65.80.22.2	700 / 840	1 × 450	240	251	2.8 / 2.2	5.0 / 37	2	3 × 380-415	DOL	96102274
MDV.65.80.30.2				261	3.8 / 3.0	6.6 / 51				96102276
MDV.65.80.40.2				340	4.8 / 4.0	8.6 / 71			Y/D	96102278
MDV.80.80.60.2				349	7.1 / 6.0	13.9 / 148				96776520
MDV.80.80.75.2				385	8.9 / 7.5	16.2 / 152				96741485
MDV.80.80.92.2				446	10.5 / 9.2	18.0 / 162				96746285
MDV.80.80.110.2				476	12.6 / 11.0	21.7 / 162				96746286

MULTILIFT MD1 - with SE1 pumps (single-channel impeller)

MULTILIFT	Inlet level [mm]	Number of tanks and tank volume [l]	Effective tank volume [l]	Weight [kg]	Power P1 / P2 [kW]	$I_{1/1}$ / I_{start} [A]	Number of poles	Voltage [V]	Starting method	Product number
MD1.80.80.15.4	700 / 840	1 × 450	240	286	2.1 / 1.5	4.2 / 22	4	3 × 380-415	DOL	96102280
MD1.80.80.22.4				293	2.9 / 2.2	5.9 / 32				96102282
MD1.80.80.30.4				376	3.7 / 3.0	7.8 / 43				96102284
MD1.80.80.40.4				411	4.9 / 4.0	10.0 / 67			Y/D	96102286
MD1.80.80.55.4				428	6.5 / 5.5	13.4 / 87				96102288
MD1.80.80.75.4				531	9.0 / 7.5	17.3 / 107				96102290

TM047170

MULTILIFT MDV - with SLV pumps (SuperVortex, free-flow impeller)

MULTILIFT	Inlet level [mm]	Number of tanks and tank volume [l]	Effective tank volume [l]	Weight [kg]	Power P1 / P2 [kW]	$I_{1/1}$ / I_{start} [A]	Number of poles	Voltage [V]	Starting method	Product number
MDV.65.80.22.2	700 / 840	1 × 450	240	202	2.8 / 2.2	4.9 /43	2	3 × 380-415	DOL	97577818
MDV.65.80.30.2				259	3.8 / 3.0	6.8 / 59.8				97577833
MDV.65.80.40.2				322	4.8 / 4.0	8.5 / 93			Y/D	97577836
MDV.80.80.60.2				364	6.9 / 6.0	12.5 / 122				97577838
MDV.80.80.75.2				364	8.7 / 7.5	14.9 / 117				97577840
MDV.80.80.92.2				442	10.5 / 9.2	18.0 / 160				97577853
MDV.80.80.110.2				442	12.5 / 11.0	21.6 / 160				97577855

MULTILIFT MD1 - with SL1 pumps (single-channel impeller)

MULTILIFT	Inlet level [mm]	Number of tanks and tank volume [l]	Effective tank volume [l]	Weight [kg]	Power P1 / P2 [kW]	$I_{1/1}$ / I_{start} [A]	Number of poles	Voltage [V]	Starting method	Product number
MD1.80.80.15.4	700 / 840	1 × 450	240	282	2.1 / 1.5	3.9 / 26	4	3 × 380-415	DOL	97577857
MD1.80.80.22.4				297	2.9 / 2.2	5.3 / 38.3				97577859
MD1.80.80.30.4				342	3.7 / 3.0	7.2 / 50				97577861
MD1.80.80.40.4				391	4.9 / 4.0	9.7 / 51			Y/D	97577863
MD1.80.80.55.4				415	6.4 / 5.5	11.8 / 81				97577865
MD1.80.80.75.4				489	8.6 / 7.5	15.2 / 109				97577867

Standard range for China, 3 × 380-415 V

The standard range is 3 × 380-415 V.
3 × 230 V variants are available on request.

TM044897

MULTILIFT MDV - with SEV pumps (SuperVortex, free-flow impeller)

MULTILIFT	Inlet level [mm]	Number of tanks and tank volume [l]	Effective tank volume [l]	Weight [kg]	Power P1 / P2 [kW]	$I_{1/1}$ / I_{start} [A]	Number of poles	Voltage [V]	Starting method	Product number
MDV.65.80.22.2 CN	700 / 840	1 × 450	240	251	2.8 / 2.2	5.0 / 37	2	3 × 380-415	DOL	98714709
MDV.65.80.30.2 CN				261	3.8 / 3.0	6.6 / 51				98714710
MDV.65.80.40.2 CN				340	4.8 / 4.0	8.6 / 71			Y/D	98714722
MDV.80.80.60.2 CN				349	7.1 / 6.0	13.9 / 148				98714725
MDV.80.80.75.2 CN				385	8.9 / 7.5	16.2 / 152				98714726
MDV.80.80.92.2 CN				446	10.5 / 9.2	18.0 / 162				98714727
MDV.80.80.110.2 CN				476	12.6 / 11.0	21.7 / 162				98714723

MULTILIFT MD1 - with SE1 pumps (single-channel impeller)

MULTILIFT	Inlet level [mm]	Number of tanks and tank volume [l]	Effective tank volume [l]	Weight [kg]	Power P1 / P2 [kW]	$I_{1/1}$ / I_{start} [A]	Number of poles	Voltage [V]	Starting method	Product number
MD1.80.80.15.4 CN	700 / 840	1 × 450	240	286	2.1 / 1.5	4.2 / 22	4	3 × 380-415	DOL	98714696
MD1.80.80.22.4 CN				293	2.9 / 2.2	5.9 / 32				98714697
MD1.80.80.30.4 CN				376	3.7 / 3.0	7.8 / 43				98714698
MD1.80.80.40.4 CN				411	4.9 / 4.0	10.0 / 67			Y/D	98714699
MD1.80.80.55.4 CN				428	6.5 / 5.5	13.4 / 87				98714702
MD1.80.80.75.4 CN				531	9.0 / 7.5	17.3 / 107				98714708

TM047170

MULTILIFT MDV - with SLV pumps (SuperVortex, free-flow impeller)

MULTILIFT	Inlet level [mm]	Number of tanks and tank volume [l]	Effective tank volume [l]	Weight [kg]	Power P1 / P2 [kW]	$I_{1/1}$ / I_{start} [A]	Number of poles	Voltage [V]	Starting method	Product number
MDV.65.80.22.2 CN	700 / 840	1 × 450	240	202	2.8 / 2.2	4.9 /43	2	3 × 380-415	DOL	98714805
MDV.65.80.30.2 CN				259	3.8 / 3.0	6.8 / 59.8				98714808
MDV.65.80.40.2 CN				322	4.8 / 4.0	8.5 / 93			Y/D	98714809
MDV.80.80.60.2 CN				364	6.9 / 6.0	12.5 / 122				98714821
MDV.80.80.75.2 CN				364	8.7 / 7.5	14.9 / 117				98714822
MDV.80.80.92.2 CN				442	10.5 / 9.2	18.0 / 160				98714823
MDV.80.80.110.2 CN				442	12.5 / 11.0	21.6 / 160				98714810

MULTILIFT MD1 - with SL1 pumps (single-channel impeller)

MULTILIFT	Inlet level [mm]	Number of tanks and tank volume [l]	Effective tank volume [l]	Weight [kg]	Power P1 / P2 [kW]	$I_{1/1}$ / I_{start} [A]	Number of poles	Voltage [V]	Starting method	Product number
MD1.80.80.15.4 CN	700 / 840	1 × 450	240	282	2.1 / 1.5	3.9 / 26	4	3 × 380-415	DOL	98714796
MD1.80.80.22.4 CN				297	2.9 / 2.2	5.3 / 38.3				98714798
MD1.80.80.30.4 CN				342	3.7 / 3.0	7.2 / 50				98714800
MD1.80.80.40.4 CN				391	4.9 / 4.0	9.7 / 51			Y/D	98714801
MD1.80.80.55.4 CN				415	6.4 / 5.5	11.8 / 81				98714802
MD1.80.80.75.4 CN				489	8.6 / 7.5	15.2 / 109				98714804

Performance curves

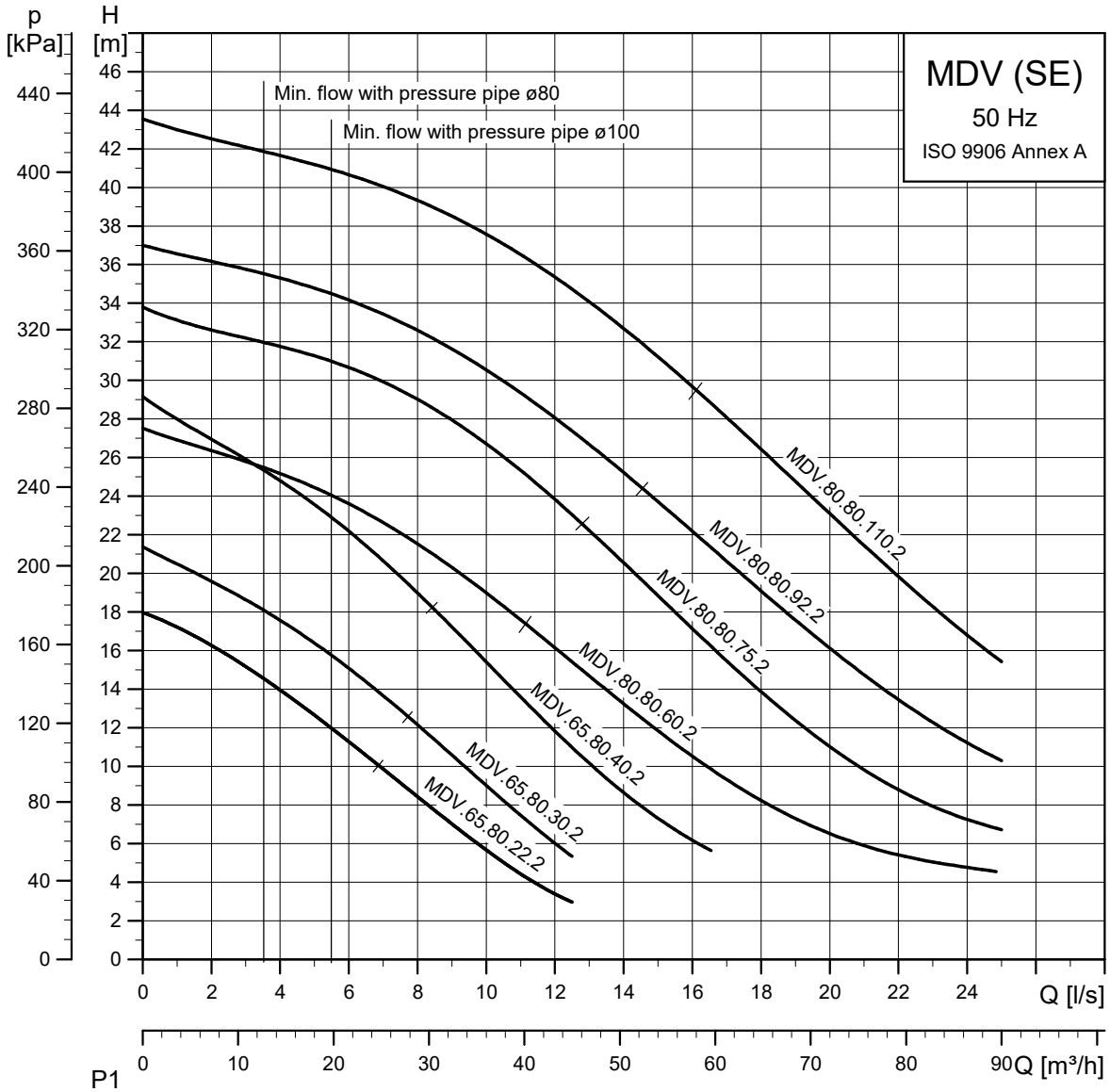

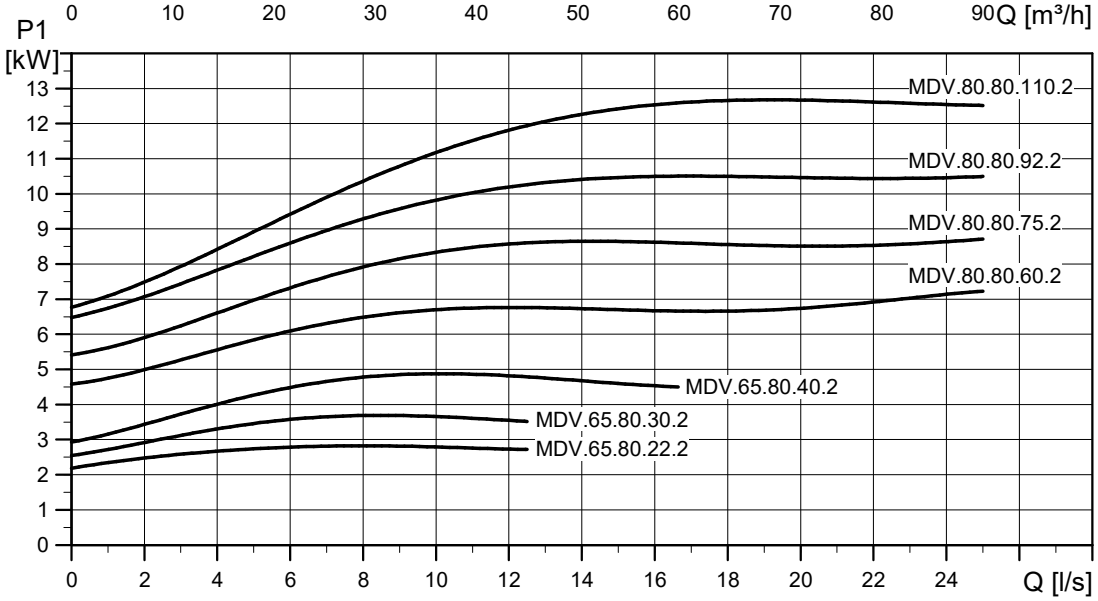

TM074252

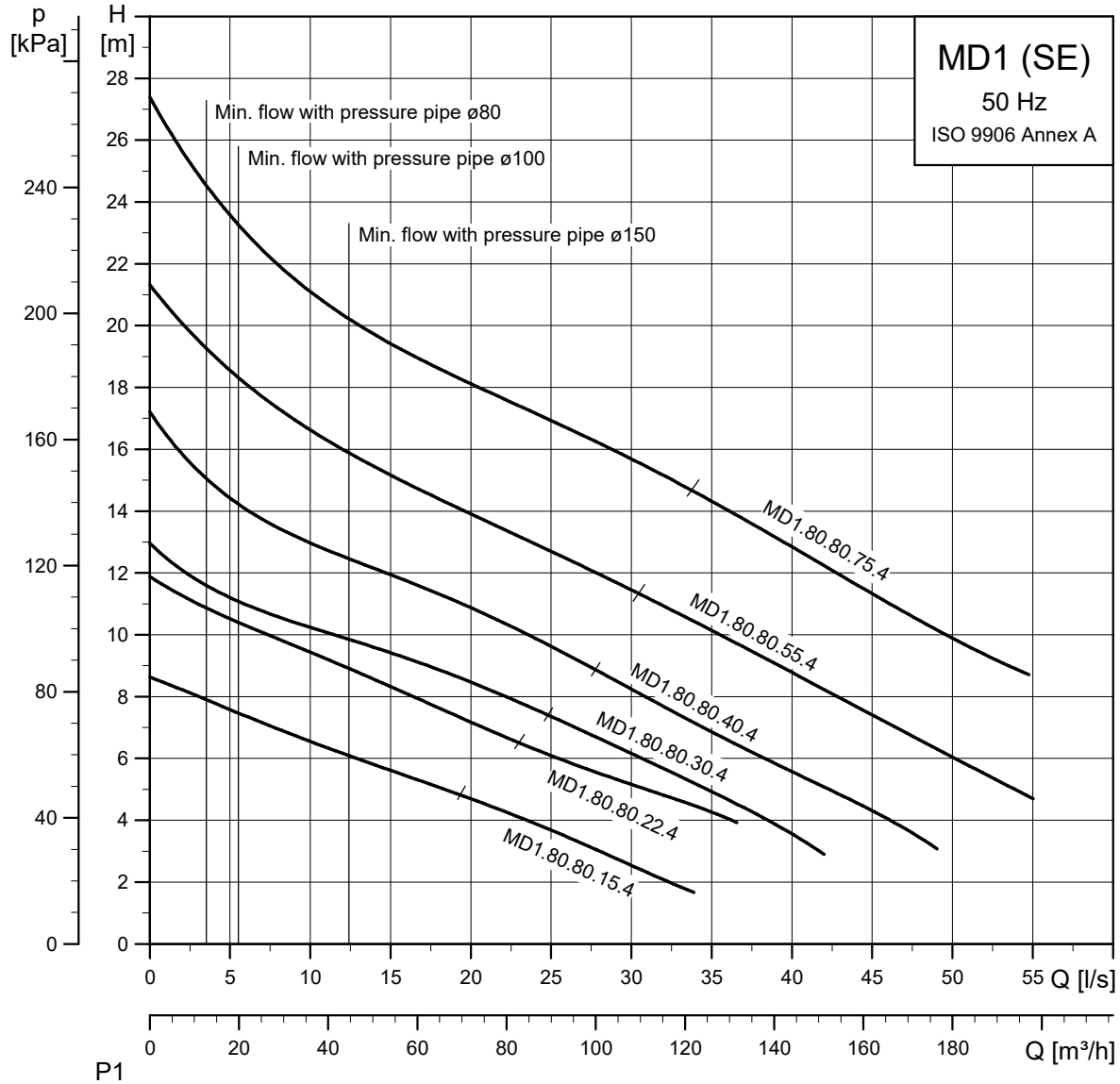
MD1 (SE)
50 Hz
ISO 9906 Annex A
p [kPa]
H [m]
Min. flow with pressure pipe ø80
Min. flow with pressure pipe ø100
Min. flow with pressure pipe ø150
MD1.80.80.75.4
MD1.80.80.55.4
MD1.80.80.40.4
MD1.80.80.30.4
MD1.80.80.22.4
MD1.80.80.15.4
Q [l/s]
Q [m³/h]

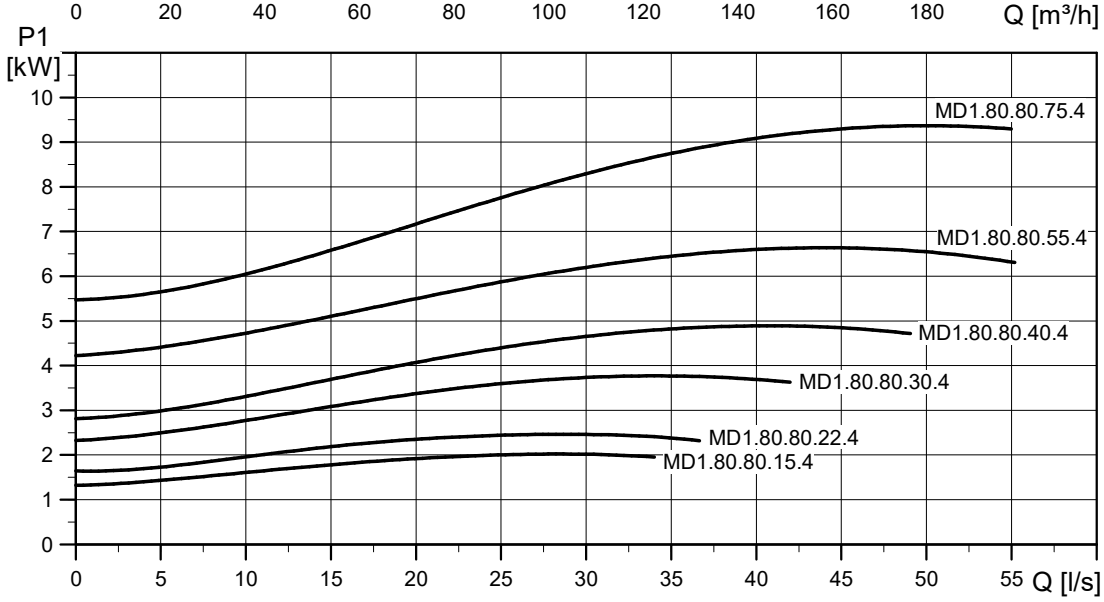
P1 [kW]
MD1.80.80.75.4
MD1.80.80.55.4
MD1.80.80.40.4
MD1.80.80.30.4
MD1.80.80.22.4
MD1.80.80.15.4
Q [l/s]

TM074250

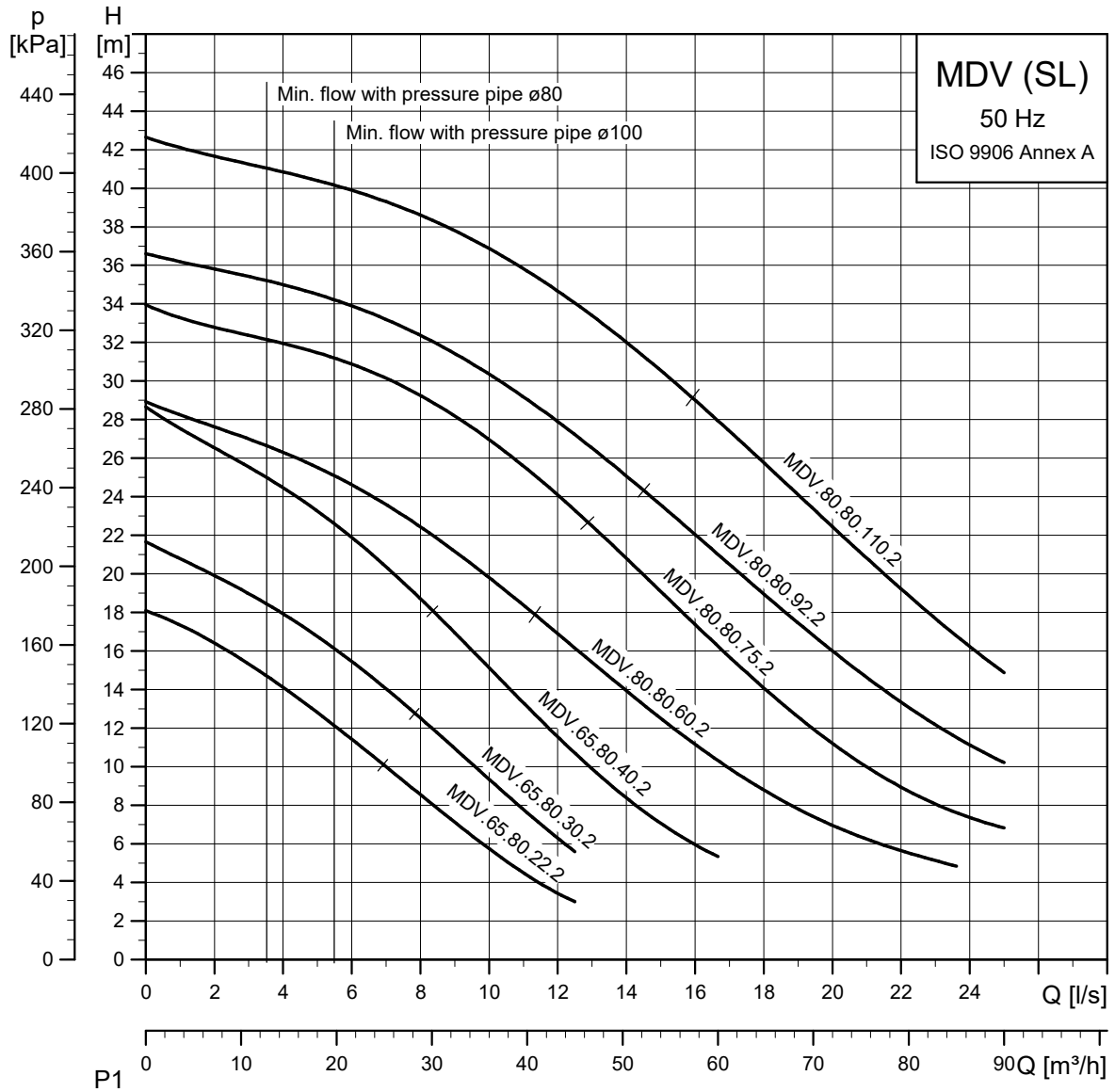
MDV (SL)
50 Hz
ISO 9906 Annex A
p [kPa]
H [m]
Min. flow with pressure pipe ø80
Min. flow with pressure pipe ø100
MDV.80.80.110.2
MDV.80.80.92.2
MDV.80.80.75.2
MDV.80.80.60.2
MDV.65.80.40.2
MDV.65.80.30.2
MDV.65.80.22.2
Q [l/s]
Q [m³/h]

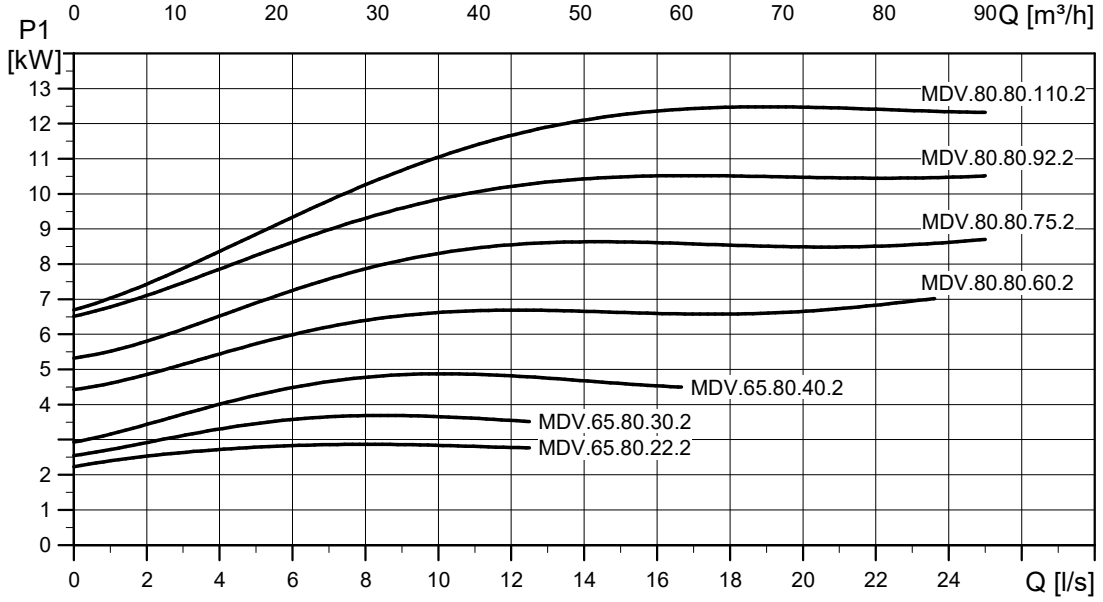
P1 [kW]
MDV.80.80.110.2
MDV.80.80.92.2
MDV.80.80.75.2
MDV.80.80.60.2
MDV.65.80.40.2
MDV.65.80.30.2
MDV.65.80.22.2
Q [l/s]

TM074253

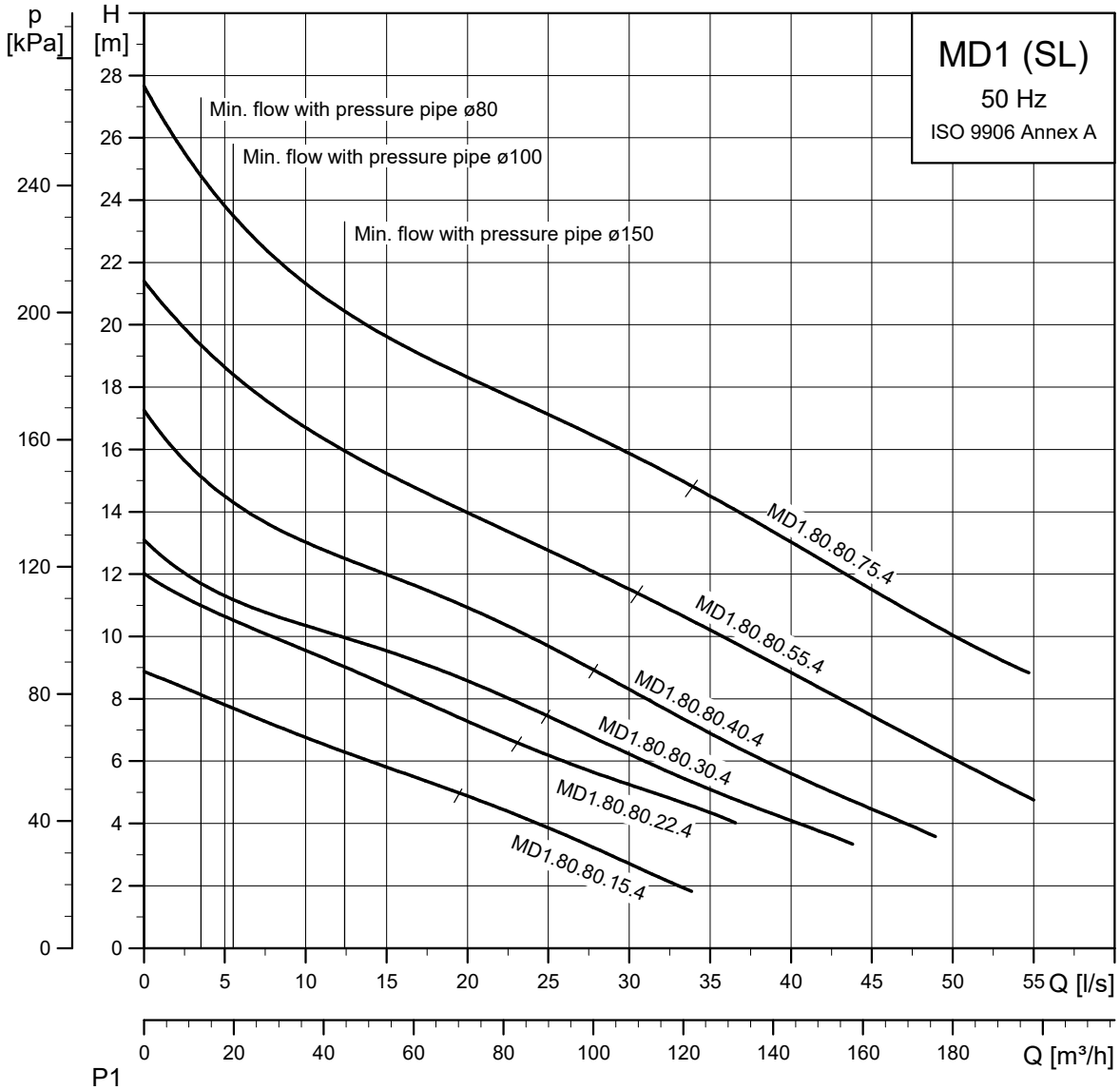
MD1 (SL)
50 Hz
ISO 9906 Annex A
p [kPa]
H [m]
Min. flow with pressure pipe ø80
Min. flow with pressure pipe ø100
Min. flow with pressure pipe ø150
MD1.80.80.75.4
MD1.80.80.55.4
MD1.80.80.40.4
MD1.80.80.30.4
MD1.80.80.22.4
MD1.80.80.15.4
Q [l/s]
Q [m³/h]

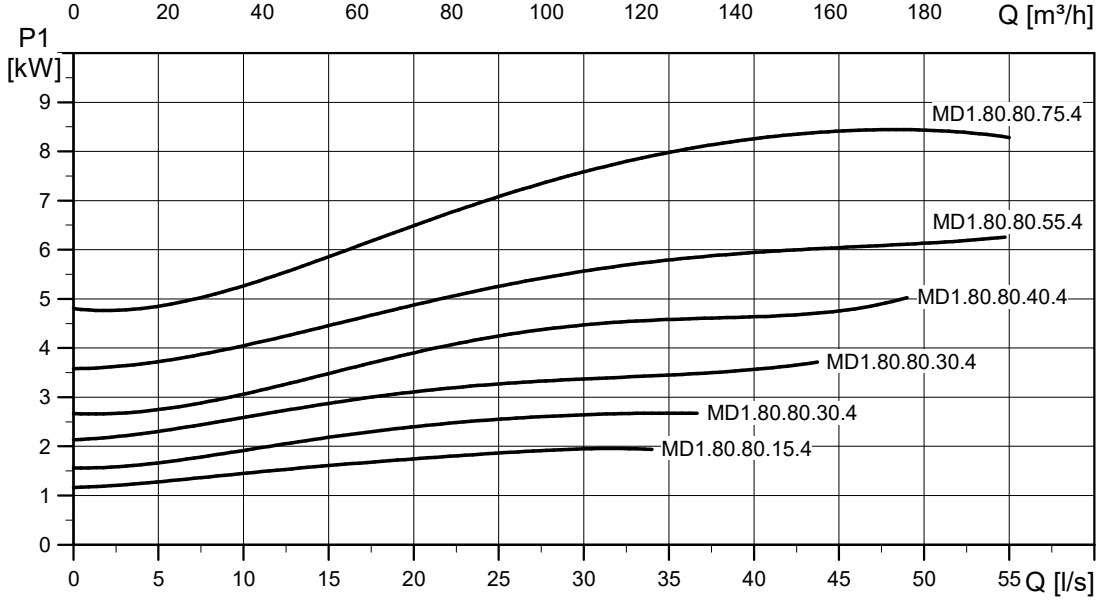
P1 [kW]
MD1.80.80.75.4
MD1.80.80.55.4
MD1.80.80.40.4
MD1.80.80.30.4
MD1.80.80.30.4
MD1.80.80.15.4
Q [l/s]

TM074251

Dimensional drawings

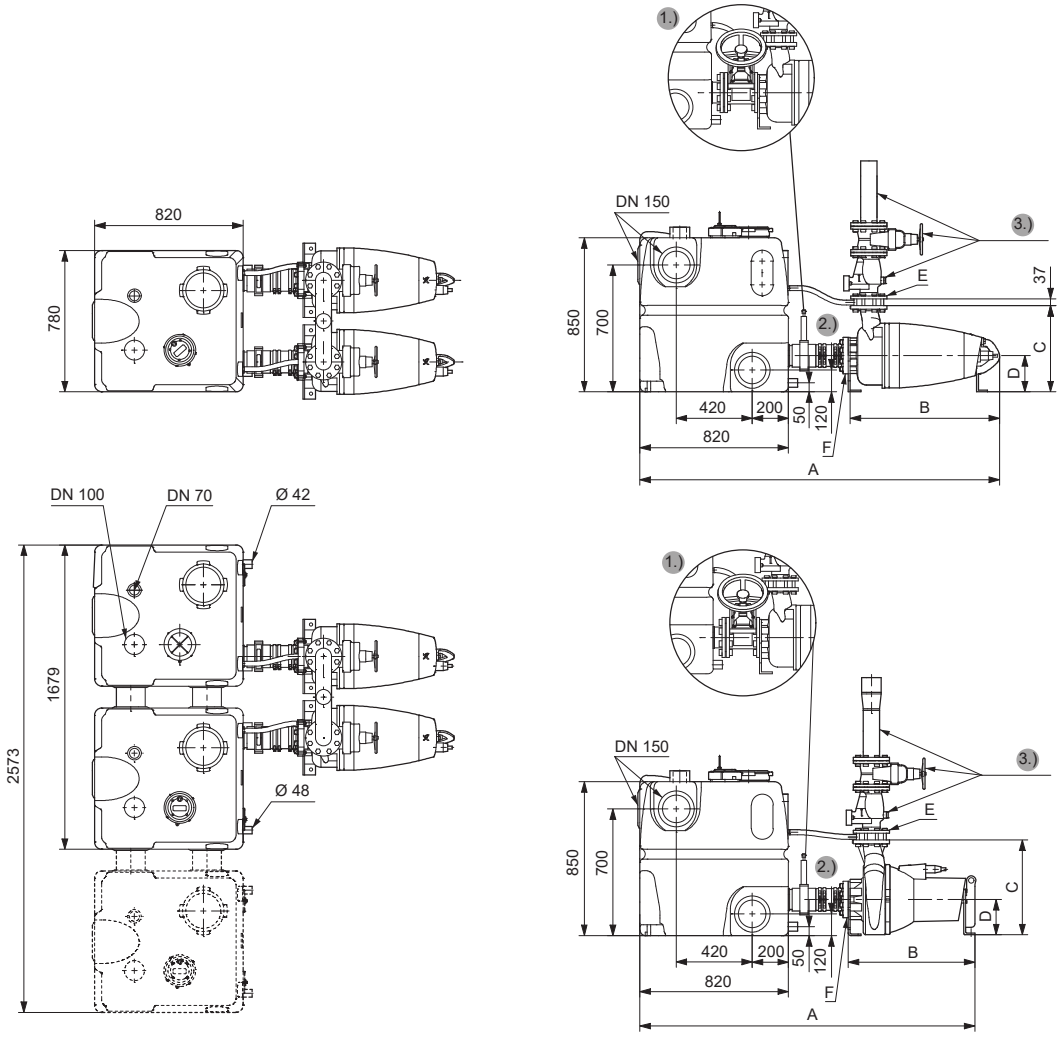

Pos.	Description
1	Cast-iron isolating valve
2	PVC isolating valve
3	Accessory

MULTILIFT MDV and MD1 with SE pumps

MULTILIFT	Dimensions [mm]						
	A 1)	A 2)	B	C	D	E	F
MDV.65.80.22/30.2	1800	1890	726	447	200	DN 80	DN 80
MDV.65.80.40.2	1870	1950	791	476	200		
MDV.80.80.60-75.2	1895	1975	816	476	200		
MDV.80.80.92-110.2	1953	2033	874	493	200		
MD1.80.80.15-22.4	1910	1980	723	472	200		DN 100
MD1.80.80.30-55.4	2005	2080	820	519	200		
MD1.80.80.75.4	2060	2135	876	528	200		

MULTILIFT MDV and MD1 with SL pumps

MULTILIFT	Dimensions [mm]						
	A 1)	A 2)	B	C	D	E	F
MDV.65.80.22/30.2	1605	1685	535	447	200	DN 80	DN 80
MDV.65.80.40.2	1690	1770	620	476	200		
MDV.80.80.60-75.2	1695	1775	625	476	200		
MDV.80.80.92-110.2	1726	1806	782	493	200		
MD1.80.80.15-22.4	1625	1705	555	472	200		DN 100
MD1.80.80.30-55.4	1655	1735	585	519	200		
MD1.80.80.75.4	1775	1850	705	528	200		

Accessories

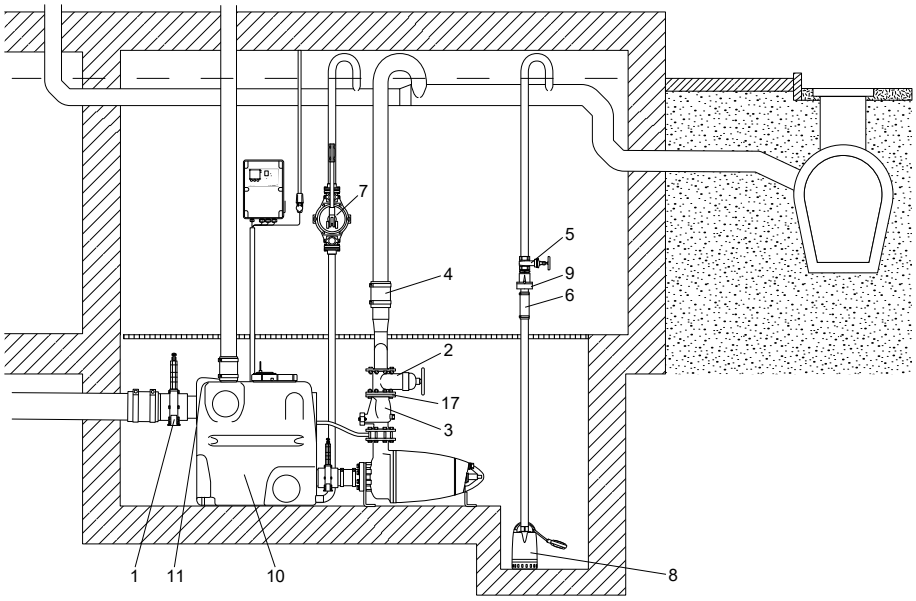

Accessories for MULTILIFT MD1, MDV

Pos.	Figure	Description	Dimensions	Product number
1	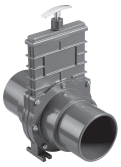	Isolating valve, PVC	DN 100 Installation length: 130 mm Height: 375 mm Connecting piece: ∅110	96615831
		Isolating valve, PVC	DN 150 Installation length: 227 mm Height: 496 mm Connecting piece: ∅160	96697920
2		Isolating valve, epoxy-coated cast iron	DN 80 Installation length: 180 mm Height: 300 mm Connection: flange PN 10	96002011
		Isolating valve, epoxy-coated cast iron	DN 100 Installation length: 190 mm Height: 340 mm Connection: flange PN 10	96002012
		Isolating valve, epoxy-coated cast iron	DN 150 Installation length: 210 mm Height: 460 mm Connection: flange PN 10	96003427
3		Non-return flap valve, epoxy-coated cast iron	DN 80 Installation length: 260 mm Connection: flange PN 10	96003826
		Non-return flap valve, epoxy-coated cast iron	DN 100 Installation length: 300 mm Connection: flange PN 10	96003827
4		Breeches pipe with flexible connection and clamps, made of epoxy coated steel	DN 80 / ∅90 / H = 359 mm	96003704
			DN 80 / ∅110 / H = 459 mm	96003705
			DN 100 / ∅110 / H = 410 mm	96003706
			DN 80 / ∅160 / H = 550 mm	96003707
5		Isolating valve, brass	DN 32 Length: 76 mm Connection: Rp 1 1/4"	00ID0918

Pos.	Figure	Description	Dimensions	Product number
6		Flexible connection with clamps for additional connections and inlets	DN 32 Length: 150 mm Internal ∅42	91071645
			DN 100 Length: 150 mm Internal ∅110	96075422
			DN 150 Length: 200 mm Internal ∅160	96473060
7		Manually operated diaphragm pump	Installation length: 435 mm Width: 234 mm Connection: Rp 1 1/2" Pumped volume per cycle: 0.65 litre Maximum suction lift: 4 m Maximum pump head: 20 m	96003721
8	For wastewater pump, for example, UNILIFT CC and KP, see data booklet for the pump or Grundfos Product Center.			
9		Non-return flap valve, composite	Length: 90 mm Height: 90 mm Connection: Rp 1 1/4"	96005308
10		Extra PE-tank including connections, lids, sealings and anchor bolts	Volume: 450 litres	96982790
11		Socket seal for additional standard inlet	DN 150 Internal ∅160	96636544
15		Flange with socket (cast iron) for PVC pipe, including lip seal	DN 150 Internal ∅160	96003701
16		Flange-hose unit (cast iron) with flexible connection and clamps	DN 150 Internal ∅160	96477895
17		Bolts, nuts, 8 of each (galvanised) Gasket	M16 × 65 mm DN 80	96001999
			M16 × 65 mm DN 100	96003823
			M16 × 65 mm DN 150	96003605
N/A		Hole saw	∅43 mm × 33 mm	99865001
			∅102 mm × 38 mm	96571536
			∅153 mm × 38 mm	99865057
N/A		Signal lamp for wall mounting	1 × 230 V, 50 Hz	91077209
N/A		Signal horn	Indoors, 1 × 230 V, 50 Hz	62500021
			Outdoors, 1 × 230 V, 50 Hz	62500022
N/A		Level switch type SAS	Cable length 5 m, 250 V	00ID7805

Pos.	Figure	Description	Dimensions	Product number
N/A		External main switch for supply cable	Up to 25 A	96002511
			Up to 40 A	96002512
N/A		Vent valve (with filter)	DN 70/80/100	98059596
N/A	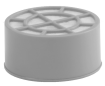	Filter kit for vent valve	DN 70/80/100	98059594
N/A		Wall installation box for vent valve	204 × 204 × 130 mm	98059598
N/A	-	Pressure hose for sensor, as a replacement	30 m 8 × 1.25 mm	98403665

11. Controllers

LC 220 controller

The level controller switches the pump of MULTILIFT MSS on and off according to the liquid level measured by the level sensor. The rising liquid level compresses the air inside the pressure tube and the piezoresistive sensor in the control cabinet measures the changing pressure. The controller uses the analog signal to start and stop the pump and to indicate high water-level alarm.

TM051778

LC 220 controller for MULTILIFT MSS

An alarm will be indicated in case of high-water level in the collecting tank, sensor fault, runtime exceeded and phase sequence fault.

As standard, the LC 220 controller has one alarm signal output for common alarm and one additional signal input to connect, for example, a level switch for flood detection outside MULTILIFT MSS. Lifting stations are often installed in a sump inside the basement - the lowest point in the building. In case of groundwater inflow or water pipe burst, an alarm is indicated by the controller if a level switch is connected to the additional signal input. Furthermore, the controller incorporates a buzzer to make the alarm indication audible.

The LC 220 controller has the following functions:

- on/off control of one wastewater pump based on a continuous signal from a piezoresistive, analog sensor
- automatic test runs during long periods of inactivity (24 hours after last operation)
- battery backup in case of mains supply failure (accessory)
- selection of automatic alarm resetting (via DIP switch)
- selection between two inlet levels (via DIP switch)
- operating indication of:
  - power on
  - pump running
  - reminder of service/maintenance (selectable via DIP switch).
- alarm indication of:
  - high water-level alarm
  - phase sequence fault (for three-phase pumps)
  - sensor failure
  - external level alarm
- runtime monitoring
- connection of PC Tool for access to fault log, hour counter, impulse (start) counter, operation parameters and for adjustments like stop delay, alarm delay, max. runtime and start/stop level.
- potential-free contact for common alarm.

The function of the operating elements is shown below:

Element	Function	Description
	Selection of operating mode	The operating mode is selected by the ON-OFF-AUTO selector switch which has three different positions: Position I: Starts the pump manually. Position O: • Stops the pump manually. • Resets alarm indications. Position AUTO: Automatic operation. The pump will start and stop according to the signal from the level sensor.
	Indication of power supply status	Green indicator light, indicating that the power supply is on.
	Indication of pump status	Red and green indicator lights, indicating pump status: Green: Pump is running. Red: Pump fault.
	High-level alarm	Red indicator light, indicating high-water level. The LED lights up if the level sensor measures a certain level in the collecting tank.
	Phase sequence fault	Red indicator light, indicating phase sequence fault (three-phase pumps).
	Sensor failure alarm	Red indicator light, indicating sensor failure.
	External level alarm	Red indicator light, indicating an alarm from an external level switch.
	Indication of time for service	Yellow indicator light, indicating that it is time for service. This function can be switched on and off by the DIP switch. The factory setting is one year according to EN 12056-4.

Type key

Example: LC 220.1.230.1.8

Code	Designation	Explanation
LC 220	LC 220	Controller type
1	One-pump controller	Number of pumps controlled by controller
230	230 V	Voltage[V]
1	Singe-phase motor	Number of phases
3	Three-phase motor	
8	8 A	Maximum operating current per pump [A]

LC 231, LC 241 Level controller

The level controller used for MULTILIFT lifting stations M, MD, MLD, MOG and MDG is either LC 231 or LC 241.

See the documentation for LC 231 and LC 241 for further details.

Data booklet:

http://net.grundfos.com/qr/i/99592907

LC 231 installation and operating instructions

Single pump unit:

http://net.grundfos.com/qr/i/99381576

Dual pump unit:

http://net.grundfos.com/qr/i/99480674

LC 241 installation and operating instructions

Single pump unit:

http://net.grundfos.com/qr/i/99381670

Dual pump unit:

http://net.grundfos.com/qr/i/99480978

12. Grundfos Product Center

Online search and sizing tool to help you make the right choice.
From the international view, you can select your specific country to view the product range available to you.
International view: *http://product-selection.grundfos.com*

All the information you need in one place

Performance curves, technical specifications, pictures, dimensional drawings, motor curves, wiring diagrams, spare parts, service kits, 3D drawings, documents, system parts. The Product Center displays any recent and saved items - including complete projects - right on the main page.

Downloads

On the product pages, you can download installation and operating instructions, data booklets, service instructions, etc., in PDF format.

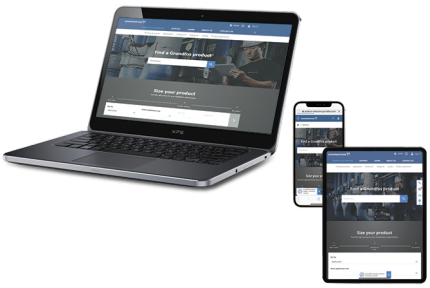

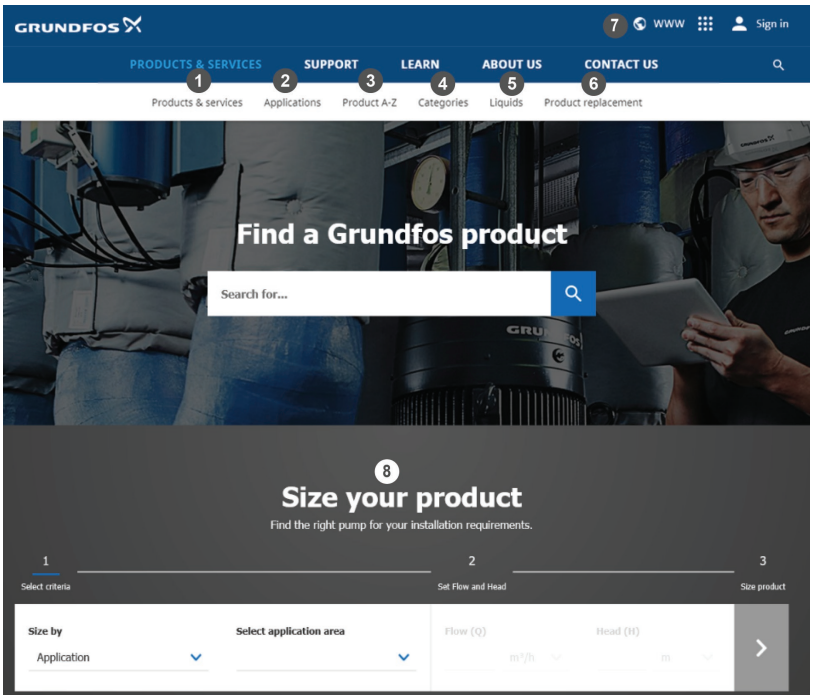

When you select your country, you will see the menus below. Note that some menus may not be available depending on the country.
Example: *https://product-selection.grundfos.com/uk*

Pos.	Description
1	**Products & services** enables you to find products and documents by typing a product number or name into the search field.
2	**Applications** enables you to choose an application to see how Grundfos can help you design and optimize your system.
3	**Products A-Z** enables you to look through a list of all the Grundfos products.
4	**Categories** enables you to look for a product category.
5	**Liquids** enables you to find pumps designed for aggressive, flammable or other special liquids.
6	**Product replacement** enables you to find a suitable replacement.
7	**WWW** enables you to select the country, which changes the language, the available product range and the structure of the website.
8	**Sizing** enables you to size a product based on your application and operating conditions.

Trademarks displayed in this material, including but not limited to Grundfos and the Grundfos logo, are registered trademarks owned by The Grundfos Group. © 2025 Grundfos Holding A/S, all rights reserved.

98288126 **03.2025**
ECM: 1419656

GRUNDFOS Holding A/S
Poul Due Jensens Vej 7
DK-8850 Bjerringbro
Tel: +45 87 50 14 00
www.grundfos.com

GRUNDFOS