CONLIFT1

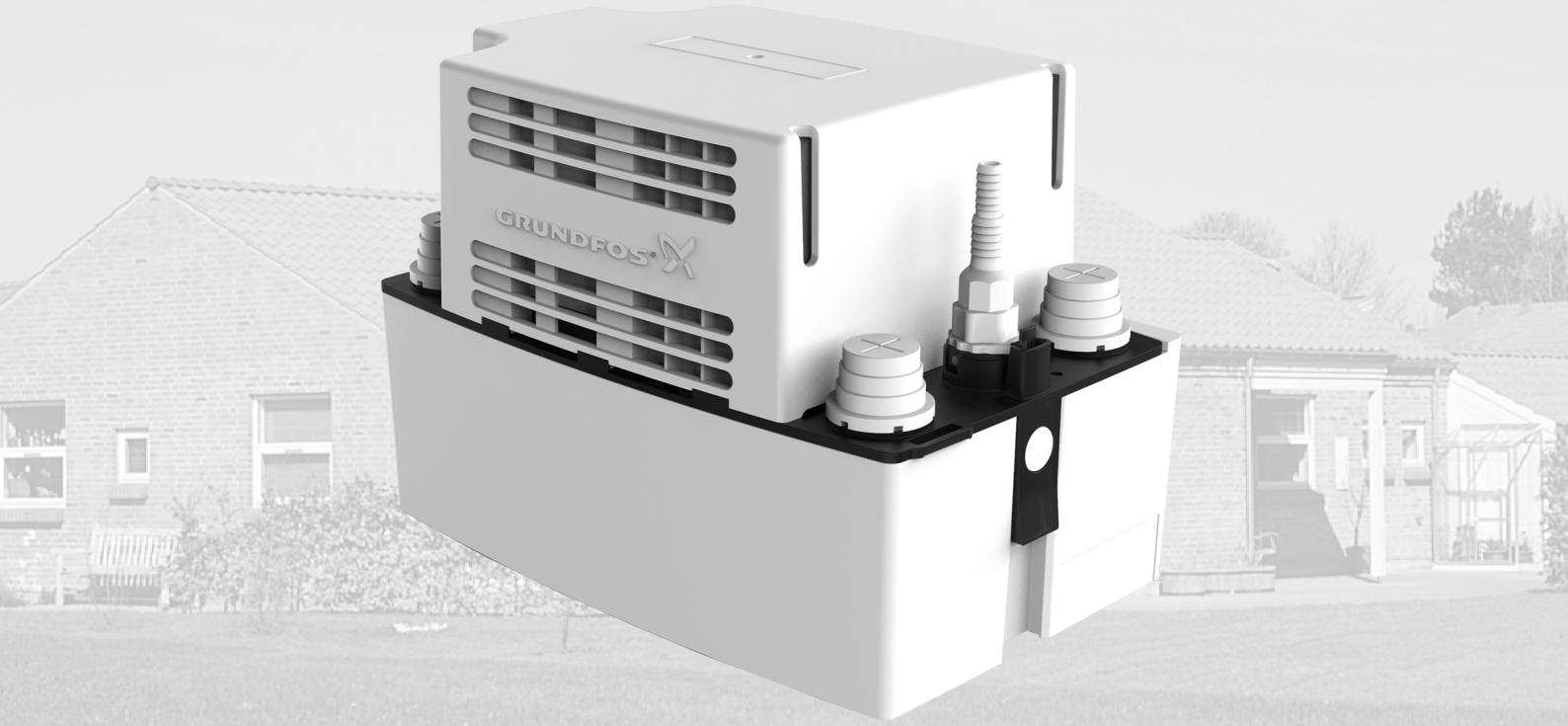

be
think
innovate

GRUNDFOS

Table of contents

1. CONLIFT1 3
Applications 3
Features and benefits 3
Functions. 4
Sizing guide 4
Construction. 5
Installation 6
Technical data 7

1. CONLIFT1

GR-1032549

Grundfos CONLIFT1 are condensate removal pump solutions suitable for the pumping of condensate that is collected below sewer level or which cannot flow to the buildings sewage system or drain by means of a natural downward slope.

Applications

Grundfos CONLIFT1 is suitable for the pumping of condensate which is collected below sewer level or which cannot flow to the sewage system or drain of the building by means of a natural downward slope.

Typical applications:

- Condensate boilers. A 200 kW boiler can be drained up to 5 m duty point.
- For condensate with a pH value above 2.5 and with an additional neutralization unit for a pH value below 2.5.
- For condensate from air-conditioning systems, cooling and refrigeration systems, air dehumidifiers and evaporators.

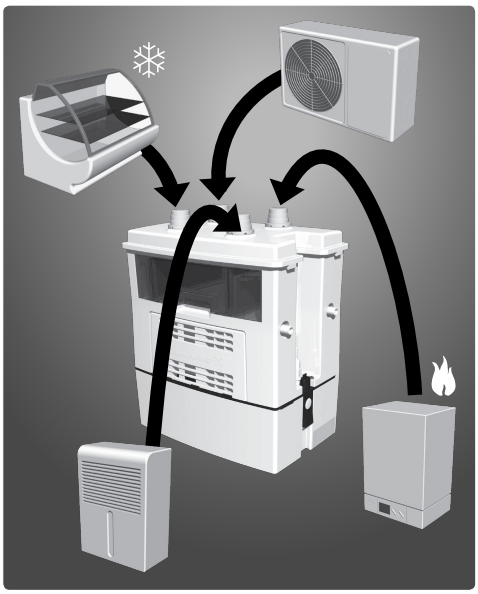

TM051812

Examples of application with neutralisation unit

Features and benefits

- Four inlets with grommets to seal and fix the inlet hose.
- 180 °-rotatable flange for selection of optimum outlet position.
- IP24 cover for protection against splashing water.
- Two snap-fasteners enabling easy access to the tank in case of service.
- Pump operation test button.
- Stepped outlet socket for ∅8 and ∅10 mm hoses.
- Non-return valve with bayonet connection for easy service.
- Special inlet design preventing sedimentation and evaporation from boiler.
- Stainless-steel motor shaft additionally protected by a shaft seal.
- Self-venting hydraulics.
- Rotating lip seal protecting bearing and motor against evaporation from tank.
- Special float switch designed to prevent evaporation from tank and corrosion on micro switches.
- Alignment wheel enabling easy adjustment in wall-hung installations.
- Suitable for wall-hung and floor-standing installation.
- Fully sealed against moisture and evaporation.
- Quick and easy installation.
- Very silent and smooth operation.
- Can be mounted on the floor or on a wall.
- Pre-assembled non-return valve.
- Pump operation test button.
- Incorporates high-water float switch.
- Fully automatic operation.
- Inlet and outlet hose connectors included.
- Neutralisation unit is available as an accessory for CONLIFT1.
- Alarm platin /PCB

Functions

The condensate runs by natural fall through a hose into the tank.

The liquid level in the tank is controlled automatically by a float switch. The condensate is pumped through the discharge hose to the drain.

The CONLIFT1 has a safety overflow switch with a 1.7 m electric cable. This overflow switch can be connected to the condensate boiler and set to stop the boiler in case of an alarm.

The CONLIFT1 has a maintenance-free shaded-pole motor with the following features:

- through-going stainless-steel shaft for pump hydraulics
- built-in thermal switch
- for intermittent operation S3.

The thermal switch stops the motor in case of overload. When the motor has cooled to normal temperature, it will restart automatically.

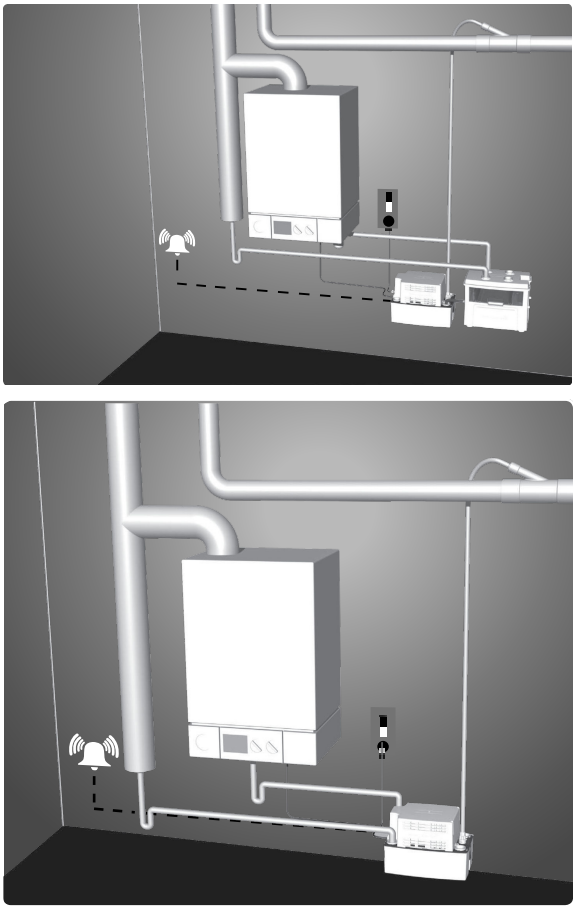

TM051820

CONLIFT1 installation examples

In order to protect the sewage system, we recommend the use of a neutralisation unit. The neutralisation unit is available as an accessory for CONLIFT1.

Irrespective of the capability of the CONLIFT1, local regulations may require the installation of a neutralisation unit, even for pH values of 2.5 or higher.

Sizing guide

Vertical or horizontal pumping

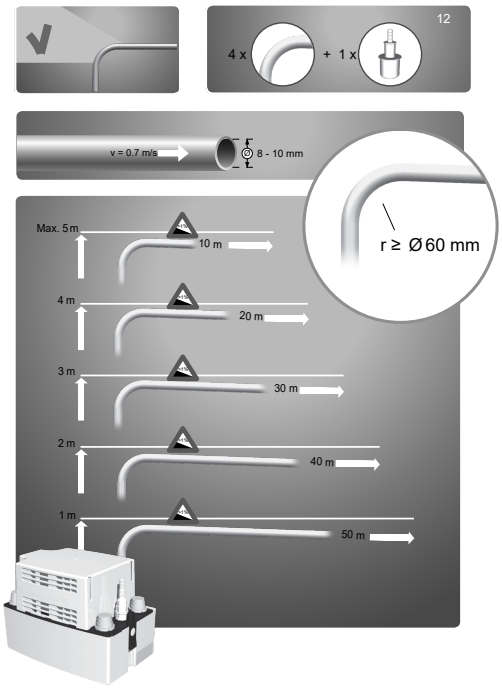

TM051815

Maximum lengths of vertical and horizontal discharge hoses

Figure Maximum lengths of vertical and horizontal outlet hoses shows the maximum lengths of vertical and horizontal outlet hoses. The hose length depends on the hose diameter and is based on a flow velocity of 0.7 m/s. Four bends, a non-return valve and an isolating valve have already been taken into account.

Construction

CONLIFT1	Description	
	Pos.	**Operational reliability**
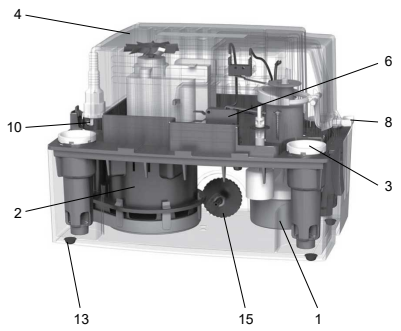 TM051822	1	Special float switch designed to prevent evaporation from tank and corrosion on micro switches
	2	Motor Stainless-steel motor shaft additionally protected by a shaft seal. Rotating lip seal protecting bearing and motor against evaporation from tank. Built-in motor protection
	3	Four inlets with grommets to seal and fix the inlet hose
	4	IP24 cover for protection against splashing water
	5	Self-venting hydraulics
	6	Overflow switch that can be connected to the condensate boiler and set to stop the boiler in case of an alarm.
	Pos.	**Easy maintenance and service**
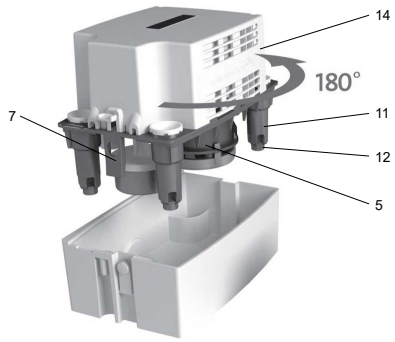 TM051824	7	Two snap-fasteners enabling easy access to the tank in case of service
	8	Pump operation test button
	9	Stepped outlet socket for ∅8 and ∅10 mm hoses
	10	Non-return valve with bayonet connection for easy service
	11	Special inlet design preventing sedimentation and evaporation from boiler
	12	Four feet below inlets keeping the sensitive float system load-free in case of service
	Pos.	**Easy installation and replacement**
TM051823	13	Suitable for wall-hung and floor-standing installation
	14	180 °-rotatable flange for selection of optimum discharge position
	15	Alignment wheel enabling easy adjustment in wall-hung installations
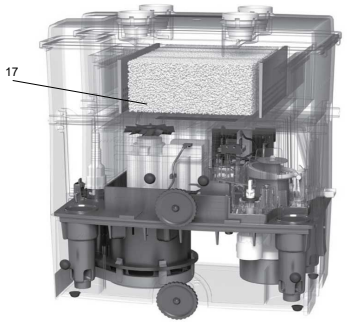 TM051828	17	Neutralisation unit designed to neutralise the acid condensate coming from gas or oil boilers.

Installation

This section shows an installation example and describes the installation requirements. Installation is done quickly and easily by using flexible hose connectors with several adapter options for almost any hose diameter.

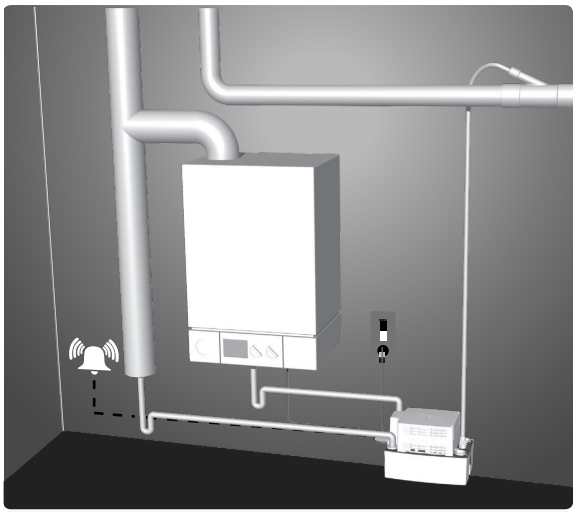

Installation example

Connections

Four inlets with grommets to seal and fix the inlet hose. Stepped outlet socket for ∅8 and ∅10 mm hoses.

Product range CONLIFT1

Pump model	Voltage	Plug type	Product number
CONLIFT1	1 x 230 V	SCHUKO	97936156
CONLIFT1	1 x 230 V	No plug	97936173

Level control

The liquid level in the tank is controlled automatically by a float switch.

The CONLIFT1 can be retrofitted with an alarm PCB and a neutralisation unit which are available as accessory.

Materials

Sturdy collection tank with four inlets for wall-hung or floor-standing installation. Built-in pump with automatic level control, self-venting hydraulics and free-flow impeller for safe pumping of aggressive condensate with low solid content. The motor, float switch and pump housing are mounted on a service-friendly component bracket on top of the tank.

The additional alarm cable can either be connected to an external alarm system or to a low-voltage circuit for shutdown of condensate source.

Component	Material
Collecting tank	PP
Component bracket and cover	PP
Pump housing	PP
Impeller	PP
Shaft	Stainless steel
Outlet hose	PVC

Included fittings

- 1 inlet adapter, ∅19/32/30 mm
- 4 inlet grommets, ∅18-22 mm
- 1 drain pipe adapter, ∅21.5/40 mm
- Screws and plugs for wall-hung installation
- 6 metres of PVC hose, ∅10/14 mm
- 1 alignment wheel.

Accessories

Accessory/service part	Description	Product number
pH+ box	Complete neutralisation unit including fitting accessories, neutralisation granulate and pH indicator.	97936176
Extension hose	6 m of PVC hose with 10 mm internal diameter including one hose coupling	97936177
Granulate refill package	Granulate, 4 x 1.4 kg and pH indicator	97936178
Alarm PCB CONLIFT1	Printed-circuit board (PCB) enabling additional pump start at alarm level or stop of boiler with acoustic alarm	97936209

Technical data

Operating conditions

Alarm connection	An external alarm can be connected via the high-water level switch. The cable can stand a control voltage of 250 VAC, 2.5 A.
Cable length	Alarm and power supply cables: 1.7 m
Storage temperature	When stored in dry rooms: empty tank: -10 °C to +50 °C tank with condensate: above 0 °C (risk of frost not allowed)
Ambient temperature	+5 °C to +35 °C
Liquid temperature	Average temperature: +50 °C Briefly: maximum +90 °C for 5 minutes
Operating mode	Intermittent operation: S3 - 30 %, 1 minute, 60 starts/hour
Maximum head	5.5 m
Maximum flow rate	600 l/h
pH value of condensate	2.5 or higher
Density of condensate	Maximum 1000 kg/m^3
Motor protection	Thermal overload switch: +120 °C Insulation class: F
Enclosure class	IP24
Weight	2.0 kg
Volume	Tank volume: 2.65 l Useful volume: 0.9 l Alarm condition: 2.1 l Operating condition: 1.7 l

Electrical data

Pump type	Supply voltage	Input power	Input current
CONLIFT1	1 x 230 VAC - 6 %/+ 6 %, 50 Hz, PE	P1 = 70 W	I = 0.65 A

Dimensions

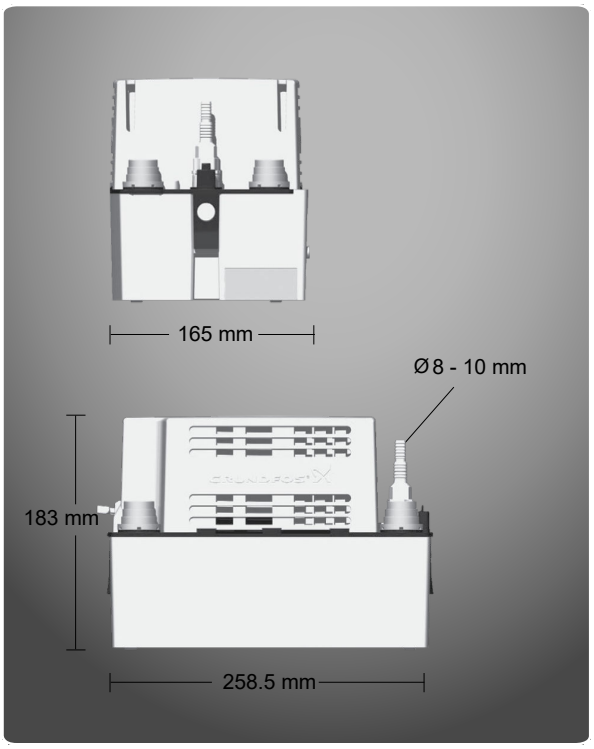

Dimensions

Performance curves CONLIFT1

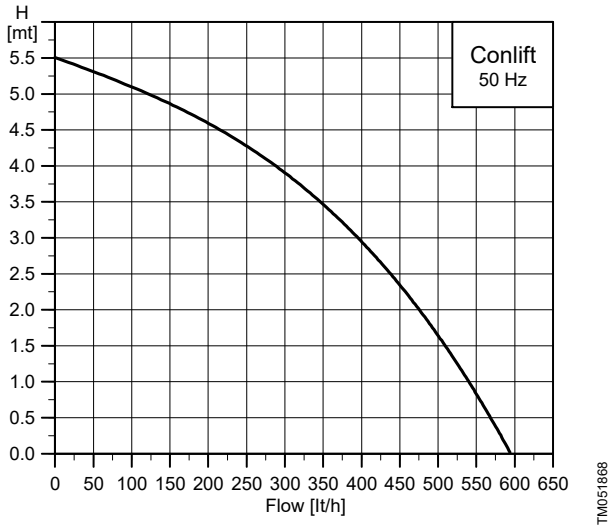

Performance curve

Argentina
Bombas GRUNDFOS de Argentina S.A.
Ruta Panamericana km. 37.500industin
1619 - Garín Pcia. de B.A.
Tel.: +54-3327 414 444
Fax: +54-3327 45 3190

Australia
GRUNDFOS Pumps Pty. Ltd.
P.O. Box 2040
Regency Park
South Australia 5942
Tel.: +61-8-8461-4611
Fax: +61-8-8340-0155

Austria
GRUNDFOS Pumpen Vertrieb Ges.m.b.H.
Grundfosstraße 2
A-5082 Grödig/Salzburg
Tel.: +43-6246-883-0
Fax: +43-6246-883-30

Belgium
N.V. GRUNDFOS Bellux S.A.
Boomsesteenweg 81-83
B-2630 Aartselaar
Tel.: +32-3-870 7300
Fax: +32-3-870 7301

Belarus
Представительство ГРУНДФОС в Минске
220125, Минск
ул. Шафарнянская, 11, оф. 56, БЦ «Порт»
Тел.: +375 17 397 397 3
+375 17 397 397 4
Факс: +375 17 397 397 1
E-mail: minsk@grundfos.com

Bosnia and Herzegovina
GRUNDFOS Sarajevo
Zmaja od Bosne 7-7A
BiH-71000 Sarajevo
Tel.: +387 33 592 480
Fax: +387 33 590 465
www.ba.grundfos.com
E-mail: grundfos@bih.net.ba

Brazil
BOMBAS GRUNDFOS DO BRASIL
Av. Humberto de Alencar Castelo Branco, 630
CEP 09850 - 300
São Bernardo do Campo - SP
Tel.: +55-11 4393 5533
Fax: +55-11 4343 5015

Bulgaria
Grundfos Bulgaria EOOD
Slatina District
Iztochna Tangenta street no. 100
BG - 1592 Sofia
Tel.: +359 2 49 22 200
Fax: +359 2 49 22 201
E-mail: bulgaria@grundfos.bg

Canada
GRUNDFOS Canada inc.
2941 Brighton Road
Oakville, Ontario
L6H 6C9
Tel.: +1-905 829 9533
Fax: +1-905 829 9512

China
GRUNDFOS Pumps (Shanghai) Co. Ltd.
10F The Hub, No. 33 Suhong Road
Minhang District
Shanghai 201106 PRC
Tel.: +86 21 612 252 22
Fax: +86 21 612 253 33

Columbia
GRUNDFOS Colombia S.A.S.
Km 1.5 vía Siberia-Cota Conj. Potrero Chico,
Parque Empresarial Arcos de Cota Bod. 1A.
Cota, Cundinamarca
Tel.: +57(1)-2913444
Fax: +57(1)-8764586

Croatia
GRUNDFOS CROATIA d.o.o.
Buzinski prilaz 38, Buzin
HR-10010 Zagreb
Tel.: +385 1 6595 400
Fax: +385 1 6595 499
www.hr.grundfos.com

Czech Republic
GRUNDFOS Sales Czechia and Slovakia s.r.o.
Čajkovského 21
779 00 Olomouc
Tel.: +420-585-716 111

Denmark
GRUNDFOS DK A/S
Martin Bachs Vej 3
DK-8850 Bjerringbro
Tel.: +45-87 50 50 50
Fax: +45-87 50 51 51
E-mail: info_GDK@grundfos.com
www.grundfos.com/DK

Estonia
GRUNDFOS Pumps Eesti OÜ
Peterburi tee 92G
11415 Tallinn
Tel.: + 372 606 1690
Fax: + 372 606 1691

Finland
OY GRUNDFOS Pumput AB
Trukkikuja 1
FI-01360 Vantaa
Tel.: +358-(0) 207 889 500

France
Pompes GRUNDFOS Distribution S.A.
Parc d'Activités de Chesnes
57, rue de Malacombe
F-38290 St. Quentin Fallavier (Lyon)
Tel.: +33-4 74 82 15 15
Fax: +33-4 74 94 10 51

Germany
GRUNDFOS GMBH
Schlüterstr. 33
40699 Erkrath
Tel.: +49-(0) 211 929 69-0
Fax: +49-(0) 211 929 69-3799
E-mail: infoservice@grundfos.de
Service in Deutschland:
kundendienst@grundfos.de

Greece
GRUNDFOS Hellas A.E.B.E.
20th km. Athinon-Markopoulou Av.
P.O. Box 71
GR-19002 Peania
Tel.: +0030-210-66 83 400
Fax: +0030-210-66 46 273

Hong Kong
GRUNDFOS Pumps (Hong Kong) Ltd.
Unit 1, Ground floor, Siu Wai industrial Centre
29-33 Wing Hong Street & 68 King Lam Street, Cheung Sha Wan
Kowloon
Tel.: +852-27861706 / 27861741
Fax: +852-27858664

Hungary
GRUNDFOS Hungária Kft.
Tópark u. 8
H-2045 Törökbálint
Tel.: +36-23 511 110
Fax: +36-23 511 111

india
GRUNDFOS Pumps india Private Limited
118 Old Mahabalipuram Road
Thoraipakkam
Chennai 600 097
Tel.: +91-44 2496 6800

indonesia
PT GRUNDFOS Pompa
Graha intirub Lt. 2 & 3
Jln. Cililitan Besar No.454. Makasar, Jakarta Timur
ID-Jakarta 13650
Tel.: +62 21-469-51900
Fax: +62 21-460 6910 / 460 6901

Ireland
GRUNDFOS (Ireland) Ltd.
Unit A, Merrywell Business Park
Ballymount Road Lower
Dublin 12
Tel.: +353-1-4089 800
Fax: +353-1-4089 830

Italy
GRUNDFOS Pompe Italia S.r.l.
Via Gran Sasso 4
I-20060 Truccazzano (Milano)
Tel.: +39-02-95838112
Fax: +39-02-95309290 / 95838461

Japan
GRUNDFOS Pumps K.K.
1-2-3, Shin-Miyakoda, Kita-ku
Hamamatsu
431-2103 Japan
Tel.: +81 53 428 4760
Fax: +81 53 428 5005

Korea
GRUNDFOS Pumps Korea Ltd.
6th Floor, Aju Building 679-5
Yeoksam-dong, Kangnam-ku, 135-916
Seoul, Korea
Tel.: +82-2-5317 600
Fax: +82-2-5633 725

Latvia
SIA GRUNDFOS Pumps Latvia
Deglava biznesa centrs
Augusta Deglava ielā 60
LV-1035, Rīga,
Tel.: + 371 714 9640, 7 149 641
Fax: + 371 914 9646

Lithuania
GRUNDFOS Pumps UAB
Smolensko g. 6
LT-03201 Vilnius
Tel.: + 370 52 395 430
Fax: + 370 52 395 431

Malaysia
GRUNDFOS Pumps Sdn. Bhd.
7 Jalan Peguam U1/25
Glenmarie industrial Park
40150 Shah Alam, Selangor
Tel.: +60-3-5569 2922
Fax: +60-3-5569 2866

Mexico
Bombas GRUNDFOS de México S.A. de C.V.
Boulevard TLC No. 15
Parque industrial Stiva Aeropuerto
Apodaca, N.L. 66600
Tel.: +52-81-8144 4000
Fax: +52-81-8144 4010

Netherlands
GRUNDFOS Netherlands
Veluwezoom 35
1326 AE Almere
Postbus 22015
1302 CA ALMERE
Tel.: +31-88-478 6336
Fax: +31-88-478 6332
E-mail: info_gnl@grundfos.com

New Zealand
GRUNDFOS Pumps NZ Ltd.
17 Beatrice Tinsley Crescent
North Harbour Industrial Estate
Albany, Auckland
Tel.: +64-9-415 3240
Fax: +64-9-415 3250

Norway
GRUNDFOS Pumper A/S
Strømsveien 344
Postboks 235, Leirdal
N-1011 Oslo
Tel.: +47-22 90 47 00
Fax: +47-22 32 21 50

Poland
GRUNDFOS Pompy Sp. z o.o.
ul. Klonowa 23
Baranowo k. Poznania
PL-62-081 Przeźmierowo
Tel.: (+48-61) 650 13 00
Fax: (+48-61) 650 13 50

Portugal
Bombas GRUNDFOS Portugal, S.A.
Rua Calvet de Magalhães, 241
Apartado 1079
P-2770-153 Paço de Arcos
Tel.: +351-21-440 76 00
Fax: +351-21-440 76 90

Romania
GRUNDFOS Pompe România SRL
S-PARK BUSINESS CENTER, Clădirea A2, etaj 2
Str. Tipografilor, Nr. 11-15, Sector 1, Cod 013714
Bucuresti, Romania
Tel.: 004 021 2004 100
E-mail: romania@grundfos.ro

Russia
ООО Грундфос Россия
ул. Школьная, 39-41
Москва, RU-109544, Russia
Тел. (+7) 495 564-88-00 (495) 737-30-00
Факс (+7) 495 564 8811
E-mail grundfos.moscow@grundfos.com

Serbia
Grundfos Srbija d.o.o.
Omladinskih brigada 90b
11070 Novi Beograd
Tel.: +381 11 2258 740
Fax: +381 11 2281 769
www.rs.grundfos.com

Singapore
GRUNDFOS (Singapore) Pte. Ltd.
25 Jalan Tukang
Singapore 619264
Tel.: +65-6681 9688
Faxax: +65-6681 9689

Slovakia
GRUNDFOS s.r.o.
Prievozská 4D 821 09 BRATISLAVA
Tel.: +421 2 5020 1426
sk.grundfos.com

Slovenia
GRUNDFOS LJUBLJANA, d.o.o.
Leskoškova 9e, 1122 Ljubljana
Tel.: +386 (0) 1 568 06 10
Fax: +386 (0)1 568 06 19
E-mail: tehnika-si@grundfos.com

South Africa
GRUNDFOS (PTY) LTD
16 Lascelles Drive, Meadowbrook Estate
1609 Germiston, Johannesburg
Tel.: (+27) 10 248 6000
Fax: (+27) 10 248 6002
E-mail: lgradidge@grundfos.com

Spain
Bombas GRUNDFOS España S.A.
Camino de la Fuentecilla, s/n
E-28110 Algete (Madrid)
Tel.: +34-91-848 8800
Fax: +34-91-628 0465

Sweden
GRUNDFOS AB
Box 333 (Lunnagårdsgatan 6)
431 24 Mölndal
Tel.: +46 31 332 23 000
Fax: +46 31 331 94 60

Switzerland
GRUNDFOS Pumpen AG
Bruggacherstrasse 10
CH-8117 Fällanden/ZH
Tel.: +41-44-806 8111
Fax: +41-44-806 8115

Taiwan
GRUNDFOS Pumps (Taiwan) Ltd.
7 Floor, 219 Min-Chuan Road
Taichung, Taiwan, R.O.C.
Tel.: +886-4-2305 0868
Fax: +886-4-2305 0878

Thailand
GRUNDFOS (Thailand) Ltd.
92 Chaloem Phrakiat Rama 9 Road
Dokmai, Pravej, Bangkok 10250
Tel.: +66-2-725 8999
Fax: +66-2-725 8998

Turkey
GRUNDFOS POMPA San. ve Tic. Ltd. Sti.
Gebze Organize Sanayi Bölgesi
Ihsan dede Caddesi
2. yol 200. Sokak No. 204
41490 Gebze/ Kocaeli
Tel.: +90 - 262-679 7979
Fax: +90 - 262-679 7905
E-mail: satis@grundfos.com

Ukraine
Бізнес Центр Європа
Столичне шосе, 103
м. Київ, 03131, Україна
Tel.: (+38 044) 237 04 00
Fax: (+38 044) 237 04 01
E-mail: ukraine@grundfos.com

United Arab Emirates
GRUNDFOS Gulf Distribution
P.O. Box 16768
Jebel Ali Free Zone, Dubai
Tel.: +971 4 8815 166
Fax: +971 4 8815 136

United Kingdom
GRUNDFOS Pumps Ltd.
Grovebury Road
Leighton Buzzard/Beds. LU7 4TL
Tel.: +44-1525-850000
Fax: +44-1525-850011

U.S.A.
GRUNDFOS Water Utility Head Quarters
Brookshire, Texas 77423 USA

Uzbekistan
Grundfos Tashkent, Uzbekistan
The Representative Office of Grundfos Kazakhstan in Uzbekistan
38a, Oybek street, Tashkent
Tel.: (+998) 71 150 3290 / 71 150 3291
Fax: (+998) 71 150 3292

Revision Info
Last revised on 09-09-2020

be think innovate

© 2020 Grundfos Holding A/S, all rights reserved.

Trademarks displayed in this material, including but not limited to Grundfos, the Grundfos logo and "be think innovate" are registered trademarks owned by The Grundfos Group. All rights reserved.

97974401 **12.2020**

ECM: 1303622

GRUNDFOS