Sololift2

50 Hz
1~

Service instructions

be
think
innovate

GRUNDFOS

Original service instructions

CONTENTS

		Page
1.	**Symbols used in this document**	**2**
2.	**Tightening torques and lubricants**	**3**
3.	**Service tools**	**4**
4.	**General information**	**4**
4.1	Cleaning the Sololift2	4
4.2	Cleaning the units connected	4
4.3	Periods of inactivity	4
5.	**WC-1, WC-3, CWC-3**	**5**
5.1	Removing the cover	5
5.2	Fitting the cover	5
5.3	Replacing the capacitor	5
5.4	Replacing the control board	5
5.5	Replacing the supply cable	5
5.6	Replacing the pressure switch	5
5.7	Replacing the motor	5
5.8	Replacing the grinder head/impeller	6
5.9	Replacing the grinder ring	6
5.10	DIP switch settings	6
6.	**C-3, D-2**	**7**
6.1	Removing the cover	7
6.2	Fitting the cover	7
6.3	Replacing the supply cable	7
6.4	Replacing the capacitor	7
6.5	Replacing the pressure switch	7
6.6	Replacing the motor	7
6.7	Replacing the impeller	8
7.	**Fault finding**	**9**
8.	**Wiring diagrams**	**10**
9.	**Exploded views**	**11**
9.1	WC-1	11
9.2	WC-3	12
9.3	CWC-3	13
9.4	C-3	14
9.5	D-2	15

1. Symbols used in this document

Warning
If these safety instructions are not observed, it may result in personal injury.

Warning
If these instructions are not observed, it may lead to electric shock with consequent risk of serious personal injury or death.

Caution — If these safety instructions are not observed, it may result in malfunction or damage to the equipment.

Note — Notes or instructions that make the job easier and ensure safe operation.

2. Tightening torques and lubricants

Pos.	Designation	Dimensions	Material	Torque [Nm]	Lubricant
44b	Nut	M5	Stainless steel	3.0 - 4.0	
49c	V-ring	-	NBR		Rocol Sapphire Aqua-Sil
67	Nut	M6	Stainless steel	-	
156a	O-ring	192 x 4	NBR		Rocol Sapphire Aqua-Sil
156b	Screw	∅4.7 x 25	Stainless steel	2.2 - 2.6	
160b	Screw	∅4.7 x 25	Stainless steel	2.2 - 2.6	
188	Screw	M5 x 12	Stainless steel	3.0 - 4.0	
301a	O-ring	-	NBR		Rocol Sapphire Aqua-Sil
303a	O-ring	-	NBR		Rocol Sapphire Aqua-Sil
306a	O-ring	95 x 2.5	NBR		Rocol Sapphire Aqua-Sil
308b	Screw	∅4.7 x 65	Stainless steel	2.6 - 3.2	
400c	Screw	∅4.7 x 25	Stainless steel	2.2 - 2.6	
414a	O-ring	-	NBR		Rocol Sapphire Aqua-Sil
417a	O-ring	-	NBR		Rocol Sapphire Aqua-Sil
418b	O-ring	-	NBR		Rocol Sapphire Aqua-Sil
434a	O-ring	-	NBR		Rocol Sapphire Aqua-Sil
438c	Screw	∅4.7 x 25	Stainless steel	2.6 - 3.2	
443b	Screw		Stainless steel	2.6 - 3.2	
532a	O-ring		NBR		Rocol Sapphire Aqua-Sil
532b	Screw	∅4.7 x 25	Stainless steel	-	

Rocol Sapphire Aqua-Sil, product number RM2924 (1 kg).

3. Service tools

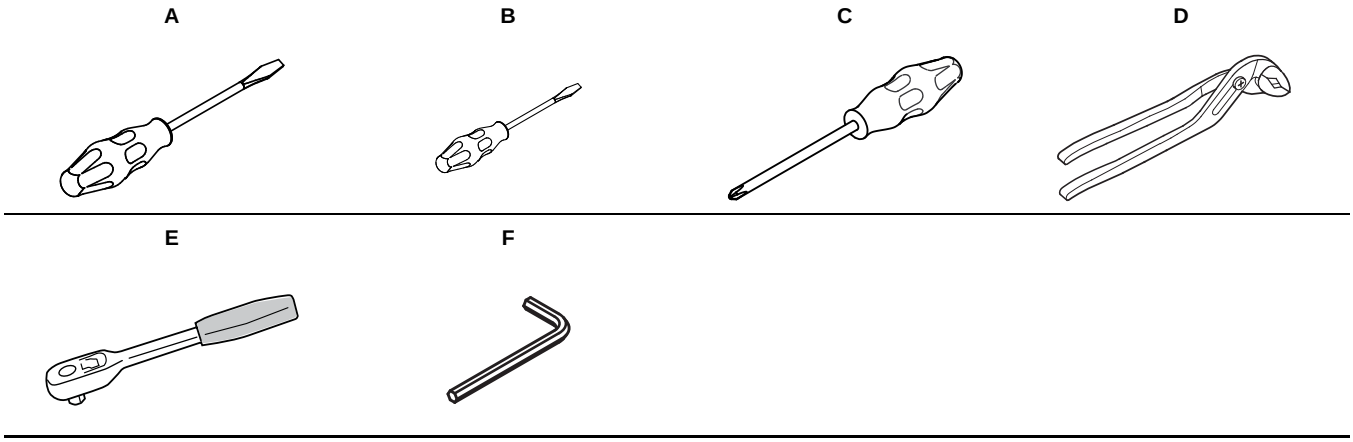

Pos.	Designation	For pos.	Further information
A	Screwdriver	301	Straight slot 8.0 mm
B	Screwdriver	-	Straight slot 2.5 mm
C	Screwdriver	-	PH 3
D	Polygrip pliers	45	50 mm opening width
E	Ratchet spanner with socket	44	8 mm
F	Hexagon key	188	4 mm

4. General information

Position numbers of parts (digits) refer to drawings and parts lists; position numbers of tools (letters) refer to section *3. Service tools*.

Before dismantling

- Switch off the power supply to the motor.
- Close the isolating valves, if fitted, to avoid draining the system.
- Disconnect the supply cable in accordance with local regulations.

Before assembly

- Clean and check all parts.
- Replace defective parts by new parts.
- Order the necessary service kits.
- Always replace gaskets and O-rings.

During assembly

- Lubricate and tighten screws and nuts according to section *2. Tightening torques and lubricants*.

Warning

Electrical parts must only be serviced by Grundfos or an authorised service workshop.

Warning

Use personal protective equipment if there is a risk of getting into contact with the pumped liquid.

Observe local regulations.

4.1 Cleaning the Sololift2

The Sololift2 is normally kept clean through regular flushing of the toilet.

If the Sololift2 is rarely used, we recommend occasional internal cleaning which is performed as follows:

1. Disconnect the power supply.
2. Put detergent into the toilet bowl, cabinet shower or washbasin. Flush the toilet or turn on the water.
3. Let the detergent work for approximately 5 minutes.
4. Switch on the power supply, and flush the toilet with clean water, or turn on the water.
5. Flush the toilet with clean water, or turn on the water again until the Sololift2 has pumped.

4.2 Cleaning the units connected

After cleaning the units connected, flush the toilet once more with clean water, or turn on the water until the Sololift2 has pumped.

4.3 Periods of inactivity

If the Sololift2 is not to be used for a long period, we recommend that you flush the toilet twice with clean water, or turn on the water until the Sololift2 has pumped twice. Then disconnect the water supply to all units connected.

If there is a risk of frost, drain the tank of water.

5. WC-1, WC-3, CWC-3

5.1 Removing the cover

1. Remove screw (pos. 400c).
2. Lift the cover free in one end and remove it.

Caution Take care not to break the two locking pins.

5.2 Fitting the cover

1. Fit the cover. The locking pins must engage with tank top (pos. 402).

Caution Take care that the supply cable and other wires are not squeezed between the cover and tank top.

2. Fasten the cover.

5.3 Replacing the capacitor

1. Remove the cover. See section *5.1 Removing the cover*.
2. Disconnect the three leads from the capacitor.
3. Lift up the plastic lock and pull the capacitor back and out.
4. Fit the new capacitor and release the plastic lock.
5. Connect the three leads. See section *8. Wiring diagrams*.
6. Fit the cover. See section *5.2 Fitting the cover*.

5.4 Replacing the control board

1. Remove the cover. See section *5.1 Removing the cover*.
2. Remove screw (pos. 160b) and protective cover (pos. 160) from the control board.
3. Remove pressure switch plug (pos. 482b) from the control board.
4. Remove the alarm device (not integrated in all models) by pulling back the plastic arm carefully and lifting the arm free.
5. Disconnect the four leads from the terminal block.
6. Remove the control board.
7. Fit the new control board.
8. Set the DIP switch. See section *5.10 DIP switch settings* or the setting of the old DIP switch.
9. Connect the pressure switch plug.
10. Connect the four leads to the terminal block. See section *8. Wiring diagrams*.
11. Fit the alarm device. Press the alarm device down so that the plastic arm is across the alarm device.
12. Fit the protective cover on the control board.
13. Fit the cover. See section *5.2 Fitting the cover*.

5.5 Replacing the supply cable

1. Remove the cover. See section *5.1 Removing the cover*.
2. Remove the cable clamp behind pressure switch (pos. 482b).
3. Disconnect the lead and neutral lead from the terminal block.
4. Disconnect the earth lead from the motor.
5. Connect the new supply cable.
6. Connect the earth lead to the motor.
7. Connect the lead and neutral lead to the terminal block. See section *8. Wiring diagrams*.
8. Fit the cable in the cable clamp, pull the cable straight and fasten it.
9. Fit the cover. See section *5.2 Fitting the cover*.

5.6 Replacing the pressure switch

1. Remove the cover. See section *5.1 Removing the cover*.
2. Disconnect pressure switch plug (pos. 482b) from control board (pos. 159).
3. Prise the pressure switch 10 to 15 ° away from control board retainer (pos. 158) and pull the pressure switch vertically off motor flange (pos. 156).
4. Clean the inner recess of the motor flange using a soft cloth.
5. Lubricate pressure switch retainer (pos. 481) and the sealing face of the motor flange with Rocol Sapphire Aqua-Sil.
6. Fit the pressure switch retainer in the motor flange and press it home.
7. Fit the pressure switch in the retainer. The small pressure switch pipe must engage with the retainer. Check that the pressure switch engages with the rubber ring.
8. Connect pressure switch wire (pos. 482) to the control board.
9. Fit the cover. See section *5.2 Fitting the cover*.

5.7 Replacing the motor

1. Remove the cover. See section *5.1 Removing the cover*.
2. Disconnect the motor lead from the terminal of control board (pos. 159).
3. Disconnect the earth lead from the motor.
4. Disconnect the two pressure switch leads (pos. 482).
5. Disconnect the motor leads from capacitor (pos. 301).
6. Press back the three plastic arms of control board retainer (pos. 158) and remove the retainer from the motor.
7. Remove motor flange (pos. 156) from tank top (pos. 402).
8. Remove screws (pos. 308b) of pump housing (pos. 2) and remove it from the motor flange.

Warning
Beware of sharp edges.
Wear protective gloves.

9. Hold the shaft with a screwdriver in the shaft end and remove impeller nut (pos. 49b) by slackening screw (pos. 188) with a hexagon key.
10. Remove grinder head (pos. 45) from the motor shaft using polygrip pliers or a similar tool.
11. Remove impeller (pos. 49) and washer (pos. 66) from the motor shaft.
12. Press the motor down and out of the motor flange.
13. Clean the inner recess of the motor flange using a soft cloth.
14. Lubricate the O-ring and the inner recess with Rocol Sapphire Aqua-Sil.
15. Fit the motor in the motor flange. The earth terminals of the motor must engage with the square hole of the control board retainer.
16. Fit the washer and impeller on the motor shaft.
17. Fit the grinder on the motor shaft with the "teeth" against the impeller.
18. Hold the shaft with a screwdriver in the shaft end. Fit the impeller nut on the motor shaft and secure it with the screw using a hexagon key.
19. Fit the pump housing with the discharge port pointing away from the pressure switch and tighten the screws.
20. Check that the grinder head does not touch the grinder ring.

21. Clean the sealing face of the tank top and the outer sealing face of the motor flange using a soft cloth.
22. Lubricate the O-ring on the motor flange and the sealing face of the tank top with Rocol Sapphire Aqua-Sil.
23. Fit the motor flange in the tank top and cross-tighten the screws.
24. Click the control board retainer onto the motor flange.
25. Connect the motor lead to the terminal block of the control board.
26. Connect the earth lead to the motor.
27. Connect the two leads to the pressure switch. See section *8. Wiring diagrams*.
28. Connect the two motor leads to the capacitor. See section *8. Wiring diagrams*.
29. Fit the cover. See section *5.2 Fitting the cover*.

5.8 Replacing the grinder head/impeller

1. Remove the cover. See section *5.1 Removing the cover*.
2. Disconnect the motor lead from the terminal of control board (pos. 159).
3. Remove motor flange (pos. 156) from tank top (pos. 402).
4. Remove screws (pos. 308b) of pump housing (pos. 2) and remove it from the motor flange.

Warning
Beware of sharp edges.
Wear protective gloves.

5. Hold the shaft with a screwdriver in the shaft end and remove impeller nut (pos. 49b) by slackening screw (pos. 188) with a hexagon key.
6. Remove grinder head (pos. 45) from the motor shaft using polygrip pliers or a similar tool.
7. Remove the impeller from the motor shaft. If necessary, use two screwdrivers with straight slot.
8. Clean the motor shaft. If necessary, use emery cloth, 400 grit.
9. Lubricate the motor shaft with Rocol Sapphire Aqua-Sil.
10. Fit the impeller.
11. Fit the grinder on the motor shaft with the "teeth" against the impeller.
12. Hold the shaft with a screwdriver in the shaft end, fit the impeller nut on the motor shaft and secure it with the screw using a hexagon key.
13. Fit the pump housing with the discharge port pointing away from the pressure switch and tighten the screws.
14. Check that the grinder head does not touch the grinder ring.
15. Clean the sealing face of the tank top and the outer sealing face of the motor flange using a soft cloth.
16. Lubricate the O-ring on the motor flange and the sealing face of the tank top with Rocol Sapphire Aqua-Sil.
17. Fit the motor flange in the tank top and cross-tighten the screws.
18. Connect the two motor leads to the capacitor. See section *8. Wiring diagrams*.
19. Fit the cover. See section *5.2 Fitting the cover*.

5.9 Replacing the grinder ring

1. Remove the cover. See section *5.1 Removing the cover*.
2. Remove motor flange (pos. 156) from tank top (pos. 402).
3. Remove screws (pos. 308b) of pump housing (pos. 2) and remove it from the motor flange.

Warning
Beware of sharp edges.
Wear protective gloves.

4. Remove the screws in the underside of the pump housing.
5. Push grinder ring (pos. 44) out of the pump housing.
6. Clean the inner contact surface of the pump housing so that the grinder ring touches the pump housing.
7. Fit the grinder ring in the pump housing. The nuts must be on the outside of the pump housing.
8. Fit the pump housing with the discharge port pointing away from the pressure switch and tighten the screws.
9. Check that the grinder head does not touch the grinder ring.
10. Clean the sealing face of the tank top and the outer sealing face of the motor flange using a soft cloth.
11. Lubricate the O-ring on the motor flange and the sealing face of the tank top with Rocol Sapphire Aqua-Sil.
12. Fit the motor flange in the tank top and cross-tighten the screws.
13. Fit the cover. See section *5.2 Fitting the cover*.

5.10 DIP switch settings

The motor has a default stop delay of 1 second. It can be set as shown below.

1 second	2 seconds	3 seconds
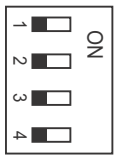	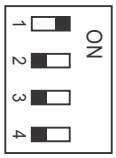	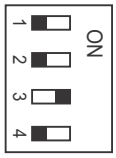
4 seconds	**5 seconds**	**7 seconds**
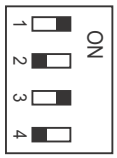	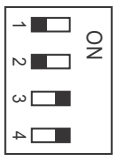	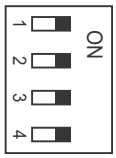

6. C-3, D-2

6.1 Removing the cover

1. Remove screw (pos. 400c).
2. Lift the cover free in one end and remove it.

Caution Take care not to break the two locking pins.

6.2 Fitting the cover

1. Fit the cover. The locking pins must engage with tank top (pos. 402).

Caution Take care that the supply cable and other wires are not squeezed between the cover and tank top.

2. Fasten the cover.

6.3 Replacing the supply cable

1. Remove the cover. See section *6.1 Removing the cover*.
2. Remove the cable clamp.
3. Separate the connector and push out the supply cable lead using a screwdriver with straight slot.
4. Separate the earth lead connector between the motor and supply cable.
5. Disconnect the neutral lead from pressure switch (pos. 482).
6. Fasten the new supply cable in the cable clamp.
7. Connect the earth lead, neutral lead and phase lead. See section *9. Exploded views*.
8. Fit the connector on motor flange (pos. 156).
9. Fit the cover. See section *6.2 Fitting the cover*.

6.4 Replacing the capacitor

1. Remove the cover. See section *6.1 Removing the cover*.
2. Separate the connector and push out the two capacitor leads using a screwdriver with straight slot.
3. Remove the wire between the capacitor and pressure switch (pos. 482).
4. Carefully pull back the plastic lock and lift out the capacitor.
5. Fit the new capacitor.
6. Connect the two capacitor leads and the wire between the capacitor and pressure switch. See section *8. Wiring diagrams*.
7. Fit the cover. See section *6.2 Fitting the cover*.

6.5 Replacing the pressure switch

1. Remove the cover. See section *6.1 Removing the cover*.
2. Disconnect the two pressure switch leads.
3. Turn the pressure switch 30 to 45 ° clockwise to loosen it from motor flange (pos. 156), and remove it.
4. Clean the sealing face of the motor flange.
5. Lubricate the O-ring on the pressure switch and the sealing face of the motor flange with Rocol Sapphire Aqua-Sil.
6. Fit the pressure switch in the motor flange and turn it 30 to 45 ° counter-clockwise to lock it.
7. C-3: Set the start level by means of the selector switch. See fig. 1.

Position	Start level [mm]
LOW	65
HIGH	115

8. Connect the two leads to the pressure switch. See section *9. Exploded views*.
9. Click the protective cover on the pressure switch.
10. Fit the cover. See section *6.2 Fitting the cover*.

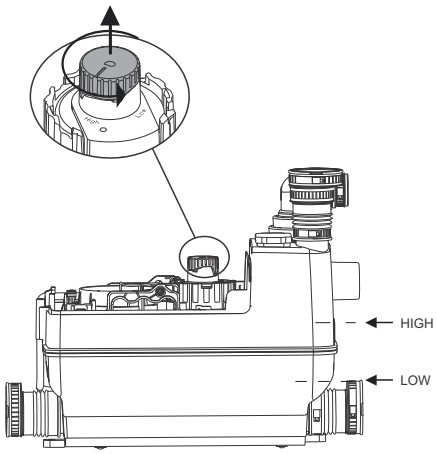

Fig. 1 Setting the start level

6.6 Replacing the motor

1. Remove the cover. See section *6.1 Removing the cover*.
2. Separate the connector between the capacitor and motor.
3. Separate the earth lead connector between the motor and supply cable.
4. Remove motor flange (pos. 156) from tank top (pos. 402).
5. Remove screws (pos. 308b) of pump housing (pos. 2) and remove it from the motor flange.
6. Press the motor down and out of the motor flange.
7. Clean the inner recess of the motor flange using a soft cloth.
8. Lubricate the O-ring and the inner recess with Rocol Sapphire Aqua-Sil.
9. Fit the motor in the motor flange. The motor leads must point in the opposite direction as the cable clamp of the supply cable.
10. Fit the pump housing with the discharge pointing away from the pressure switch and tighten the screws.
11. Check that the grinder head does not touch the grinder ring.
12. Clean the sealing face of the tank top and the outer sealing face of the motor flange using a soft cloth.
13. Lubricate the O-ring on the motor flange and the sealing face of the tank top with Rocol Sapphire Aqua-Sil.
14. Fit the motor flange in the tank top and cross-tighten the screws.
15. Connect the earth lead to the connector. Fit the connector in the motor flange.
16. Fit the cover. See section *6.2 Fitting the cover*.

6.7 Replacing the impeller

1. Remove the cover. See section *6.1 Removing the cover*.
2. Remove motor flange (pos. 156) from tank top (pos. 402).
3. Remove screws (pos. 308b) of pump housing (pos. 2) and remove it from the motor flange.
4. Hold the shaft with a screwdriver in the shaft end and remove the impeller by turning it counter-clockwise.
5. Hold the shaft with a screwdriver in the shaft end and fit the impeller by turning it clockwise.
6. Clean the inner recess of the motor flange using a soft cloth.
7. Lubricate the O-ring and the inner recess with Rocol Sapphire Aqua-Sil.
8. Fit the motor in the motor flange. The motor leads must point in the opposite direction as the cable clamp of the supply cable.
9. Fit the pump housing with the discharge port towards pressure switch (pos. 482) and cross-tighten the screws.
10. Check that the grinder head does not touch the grinder ring.
11. Clean the sealing face of the tank top and the outer sealing face of the motor flange using a soft cloth.
12. Lubricate the O-ring on the motor flange and the sealing face of the tank top with Rocol Sapphire Aqua-Sil.
13. Fit the motor flange in the tank top and cross-tighten the screws.
14. Fit the cover. See section *6.2 Fitting the cover*.

7. Fault finding

Warning

Remove the fuse, pull out the plug, or switch off the power supply. Make sure that the power supply cannot be accidentally switched on.

All rotating parts must have stopped moving.

The product must only be serviced by trained service personnel.

Fault	Cause	Remedy
1. Motor does not start when the level in the tank reaches the start level.	a) Supply failure.	Check the power supply.
	b) Fuse blown. If new fuse blows at once, either cable or motor is faulty.	Replace the fuse. Measure cable and motor. If cable or motor is defective, replace the defective parts.
	c) Impeller/grinder stuck; thermal switch tripped.	Free the impeller/grinder, and wait until the motor is cooled down and the thermal switch has reset.
	d) Pressure switch pipe blocked.	Remove the pressure switch and clean the pipe.
2. Motor hums but does not operate.	a) Impeller/grinder stuck.	Free the impeller/grinder and check that it can rotate freely.
	b) Motor or capacitor defective.	Replace the motor or capacitor.
	c) Control board defective.	Replace the control board.
3. Motor runs continuously or at irregular intervals.	a) Water leaking from inlet into tank.	Check for leaking appliances.
	b) Water leaking back into tank from discharge pipe.	Check the non-return flap.
	c) Pressure switch defective.	Replace the pressure switch unit.
4. Motor runs but does not evacuate water.	a) Pump or tank blocked.	Remove blockage.
	b) Air lock in pump or vent hole in pump housing blocked.	Check operation of vent valve in the tank. Check that the carbon filter is not wet. Check that the vent hole in the pump housing is not blocked.
	c) Discharge port or pipe blocked.	Remove blockage. Check the non-return flap.
5. The lifting station evacuates slowly.	a) Discharge pipe is too long or has an excessive number of bends.	Increase discharge pipe size. Change pipework to reduce number of bends. Change bends to swept bends.
	b) The pump housing is leaky.	Replace the pump housing.
	c) Hydraulics or grinder blocked.	Check and clean the hydraulics and grinder.
6. Rattling noise from the lifting station, but water is evacuated.	a) Foreign body hitting the impeller/grinder.	Remove the foreign body.
7. Odour from the tank.	a) Carbon filter contaminated.	Replace the carbon filter.
8. Water from shower or another appliance connected to the lower inlets drains off slowly. Backflow from the lifting station.	a) Non-return flap in inlet stuck, does not open or does not close sufficiently.	Check the non-return flap.
	b) Hydraulics or grinder blocked.	Check and clean the hydraulics and grinder.
	c) The start level has changed.	Check and clean the hydraulics and grinder.
	d) Inlet pipe diameter is too small.	Use a pipe with a larger diameter.

8. Wiring diagrams

WC-1, WC-3, CWC-3

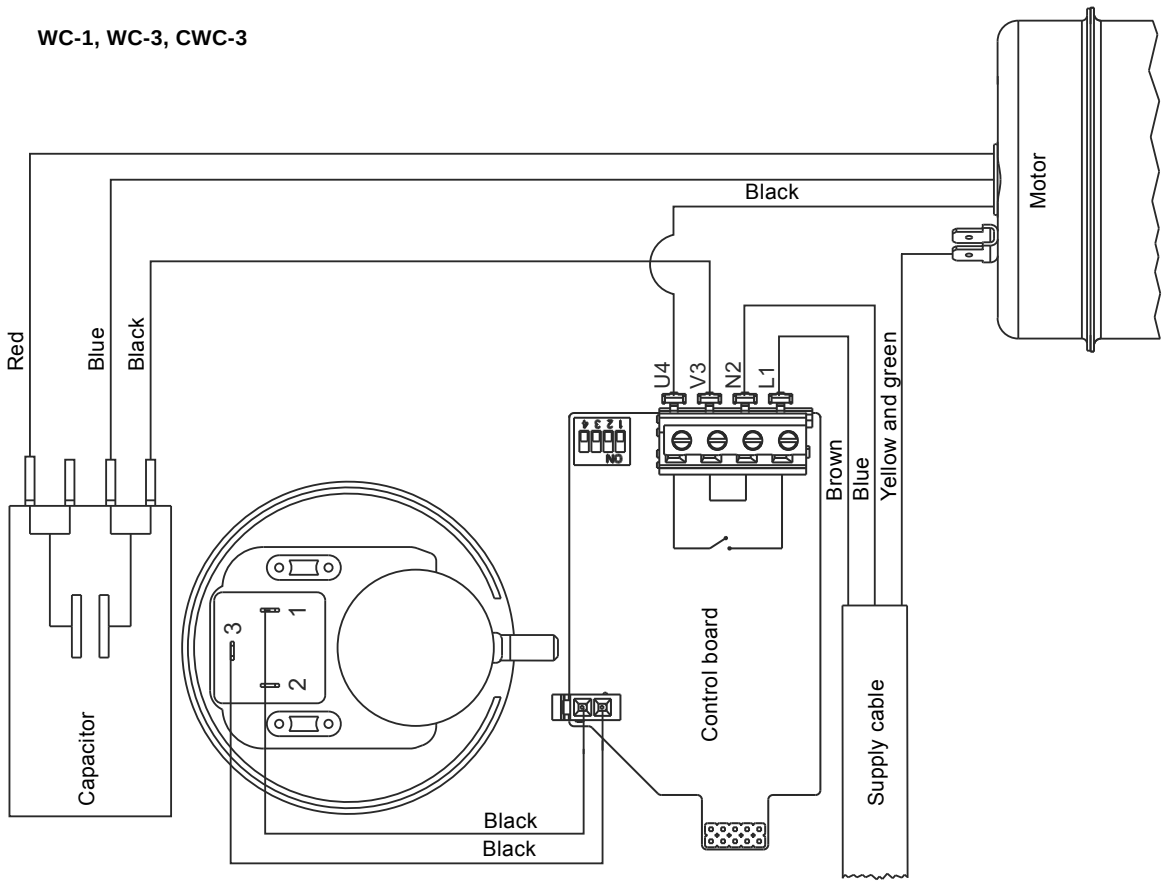

C-3, D-2

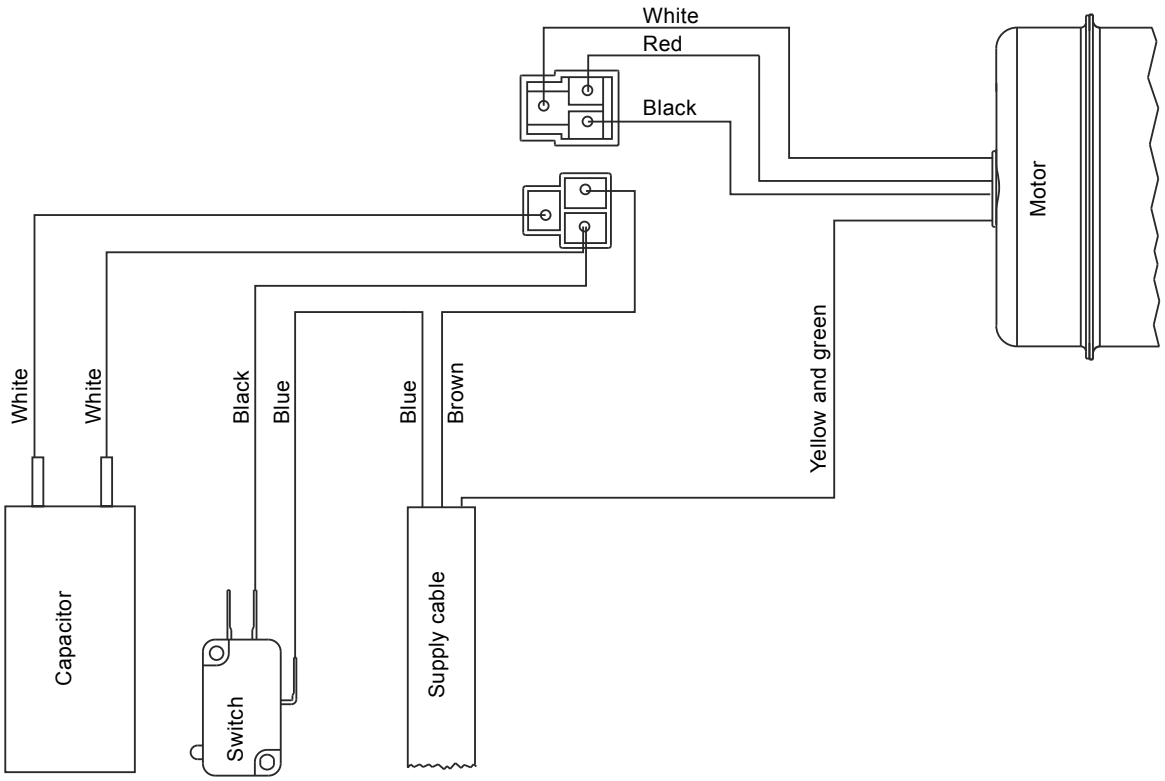

TM05 0673 1411

9. Exploded views

9.1 WC-1

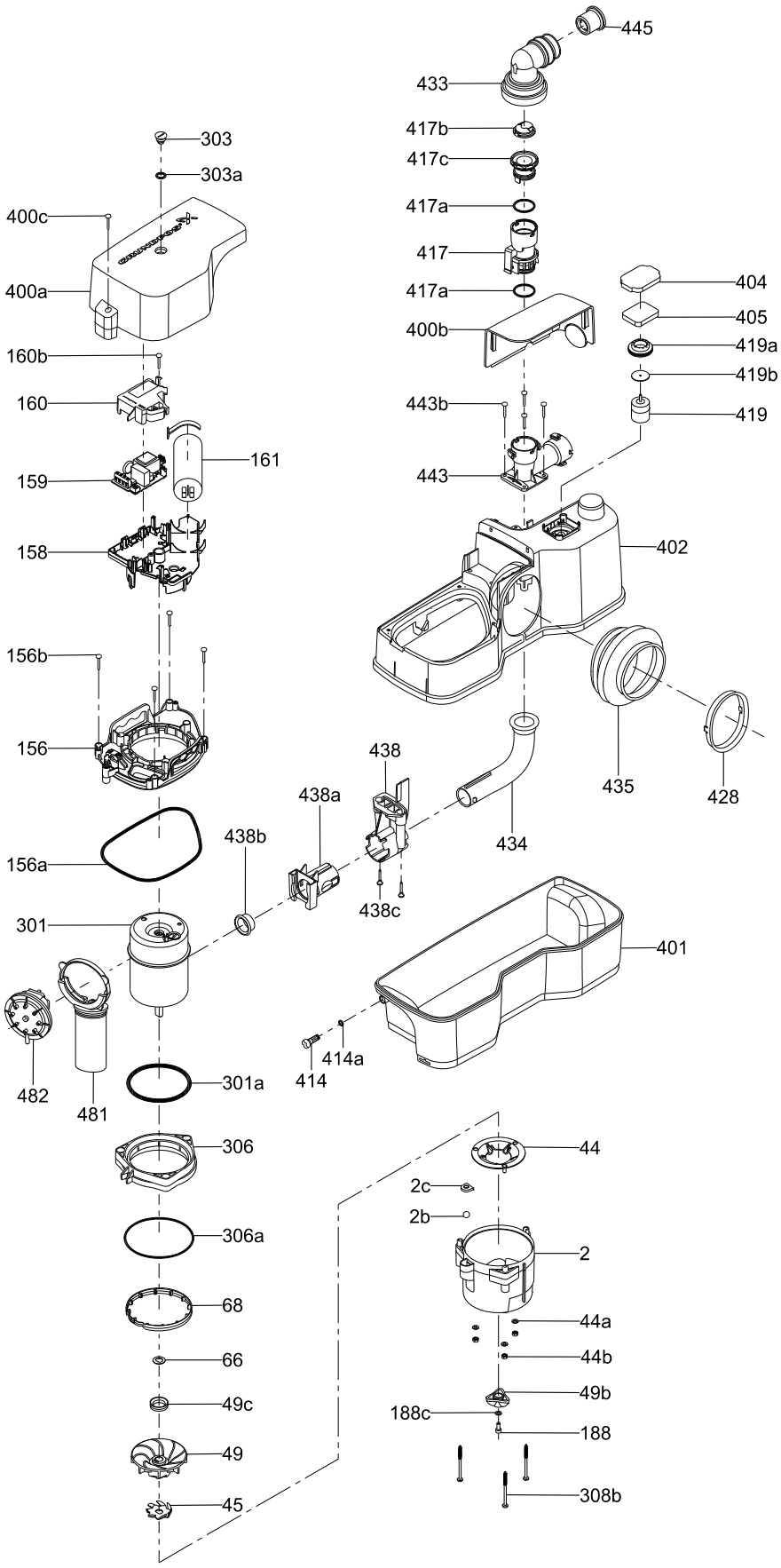

TM05 0003 0911

9.2 WC-3

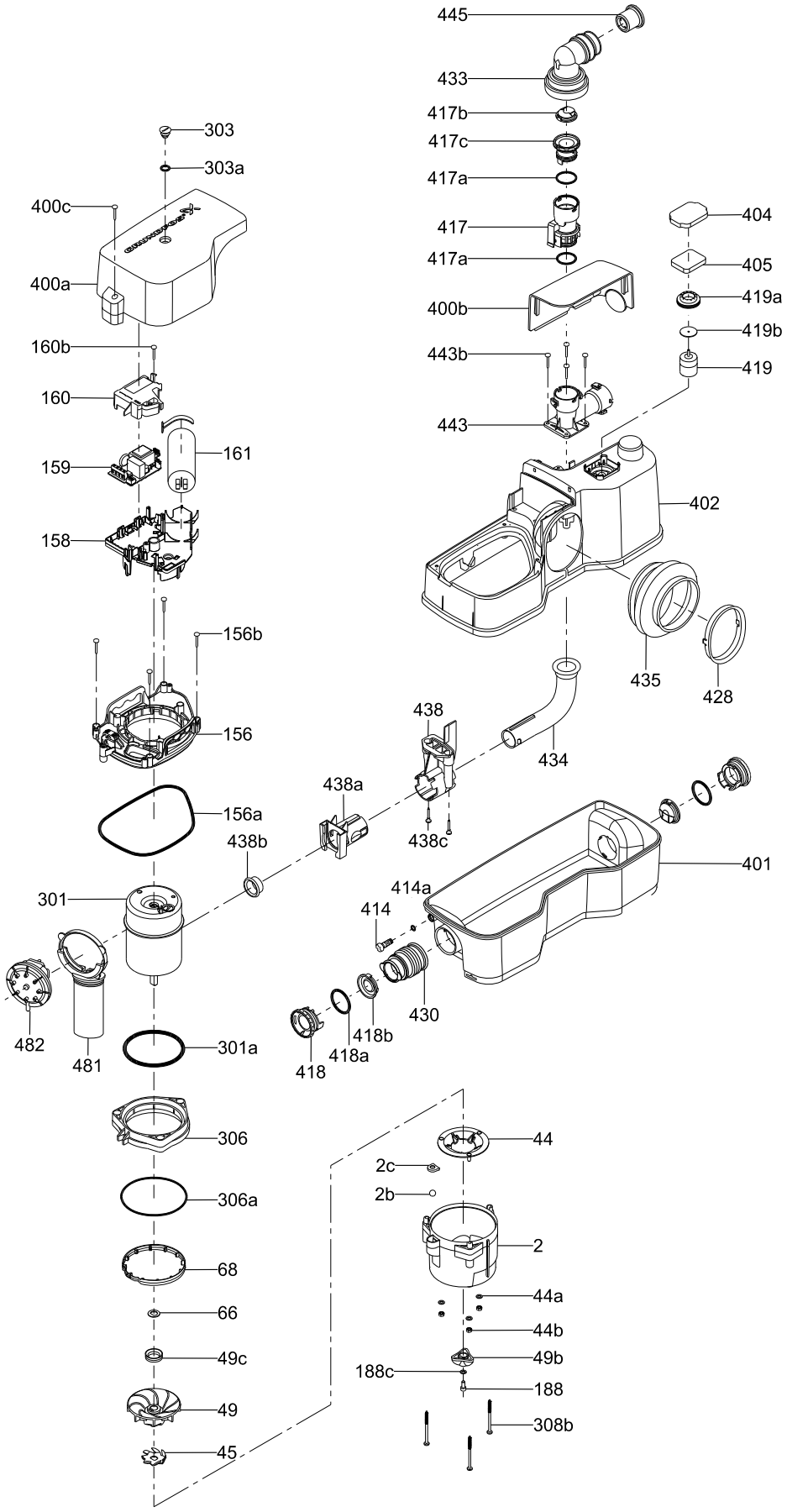

TM05 0004 0911

9.3 CWC-3

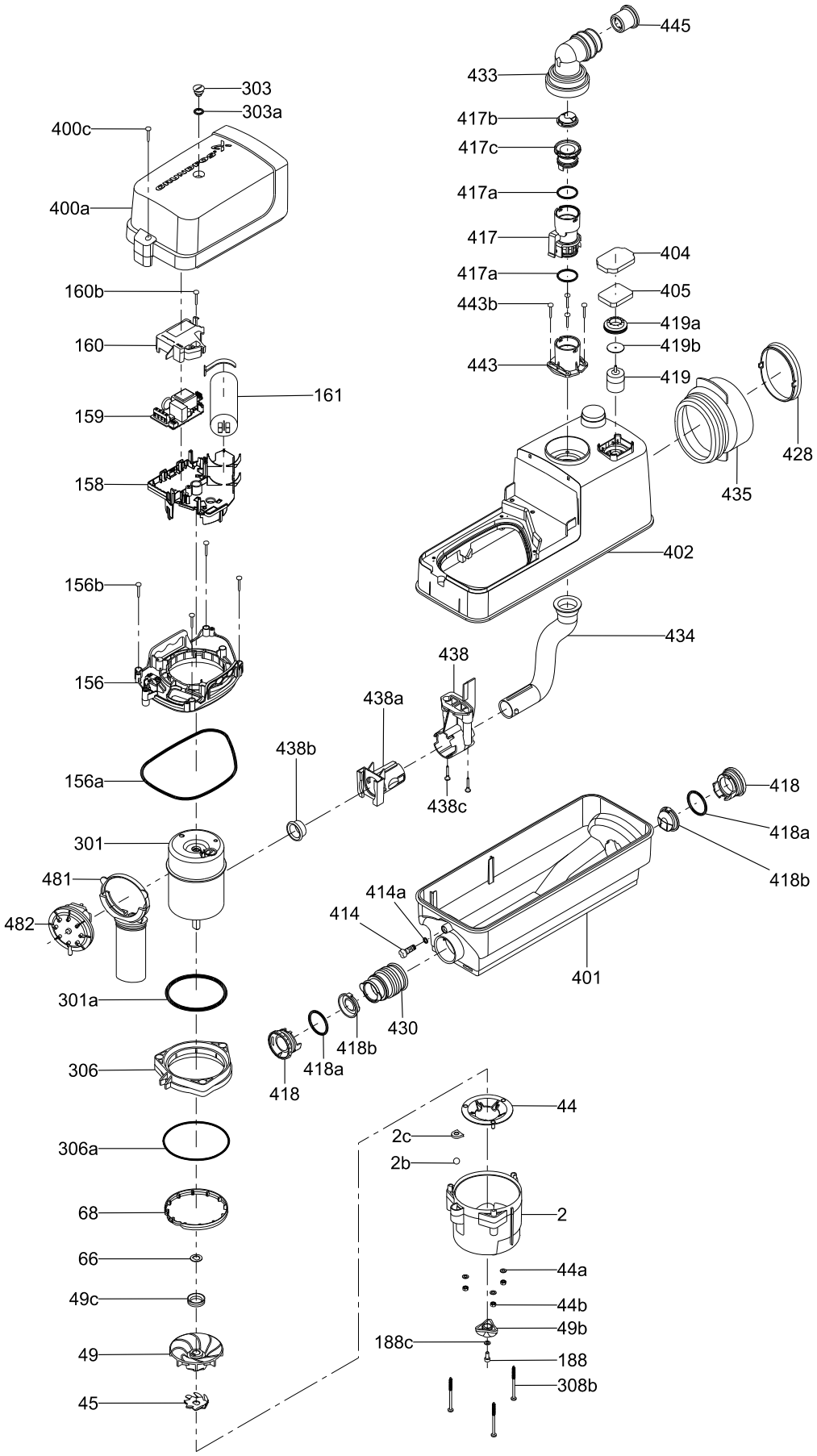

TM05 0002 0911

9.4 C-3

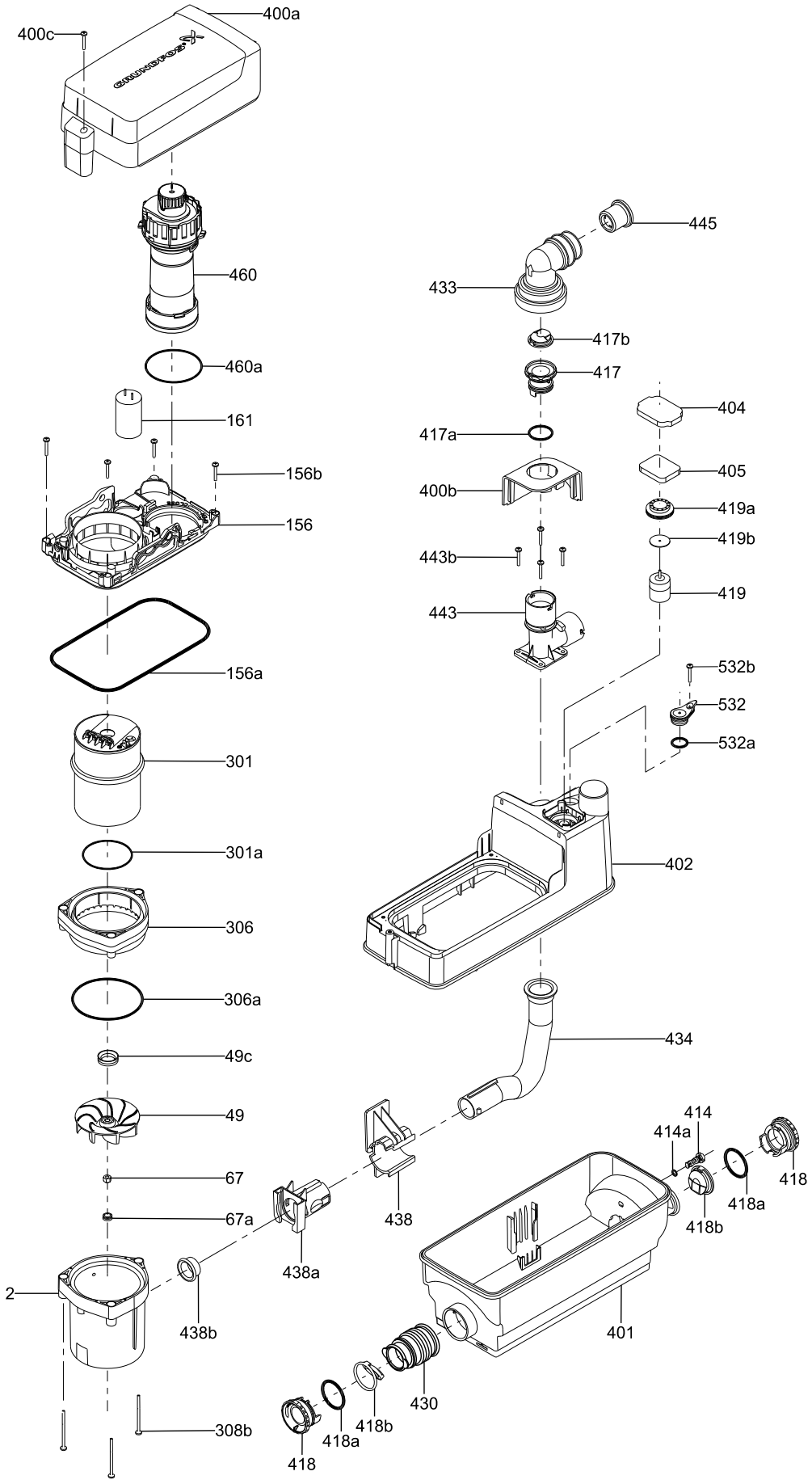

TM05 0001 0911

9.5 D-2

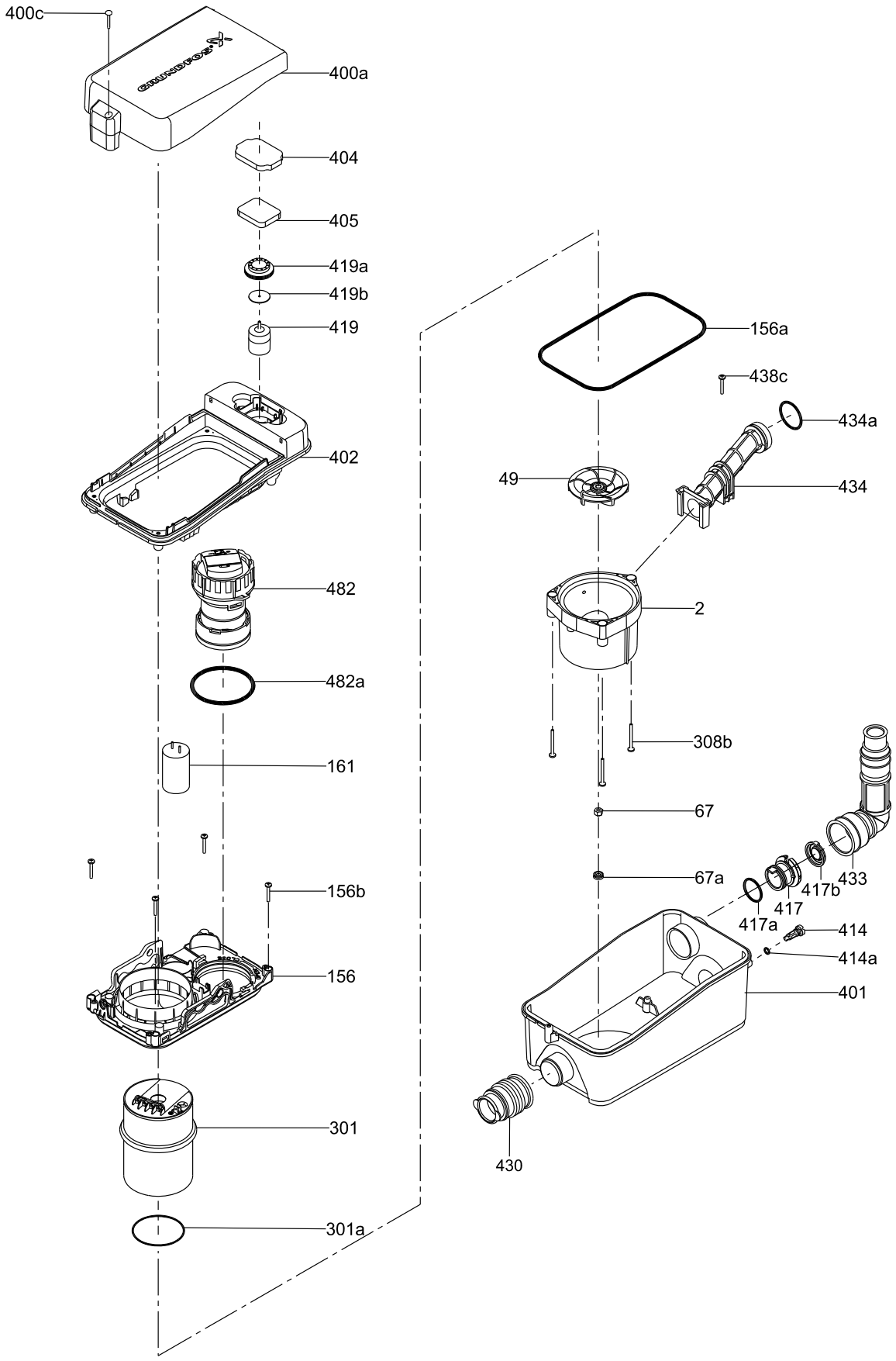
400c
400a
404
405
419a
419b
419
402
482
482a
161
156b
156
301
301a
156a
438c
434a
49
434
2
308b
67
67a
433
417b
417
417a
414
414a
401
430
TM05 0005 0911

Argentina
Bombas GRUNDFOS de Argentina S.A.
Ruta Panamericana km. 37.500 Centro Industrial Garin
1619 Garín Pcia. de B.A.
Phone: +54-3327 414 444
Telefax: +54-3327 45 3190

Australia
GRUNDFOS Pumps Pty. Ltd.
P.O. Box 2040
Regency Park
South Australia 5942
Phone: +61-8-8461-4611
Telefax: +61-8-8340 0155

Austria
GRUNDFOS Pumpen Vertrieb Ges.m.b.H.
Grundfosstraße 2
A-5082 Grödig/Salzburg
Tel.: +43-6246-883-0
Telefax: +43-6246-883-30

Belgium
N.V. GRUNDFOS Bellux S.A.
Boomsesteenweg 81-83
B-2630 Aartselaar
Tél.: +32-3-870 7300
Télécopie: +32-3-870 7301

Belarus
Представительство ГРУНДФОС в Минске
220125, Минск
ул. Шафарнянская, 11, оф. 56, БЦ «Порт»
Тел.: +7 (375 17) 286 39 72/73
Факс: +7 (375 17) 286 39 71
E-mail: minsk@grundfos.com

Bosnia and Herzegovina
GRUNDFOS Sarajevo
Zmaja od Bosne 7-7A,
BH-71000 Sarajevo
Phone: +387 33 592 480
Telefax: +387 33 590 465
www.ba.grundfos.com
e-mail: grundfos@bih.net.ba

Brazil
BOMBAS GRUNDFOS DO BRASIL
Av. Humberto de Alencar Castelo Branco, 630
CEP 09850 - 300
São Bernardo do Campo - SP
Phone: +55-11 4393 5533
Telefax: +55-11 4343 5015

Bulgaria
Grundfos Bulgaria EOOD
Slatina District
Iztochna Tangenta street no. 100
BG - 1592 Sofia
Tel. +359 2 49 22 200
Fax. +359 2 49 22 201
email: bulgaria@grundfos.bg

Canada
GRUNDFOS Canada Inc.
2941 Brighton Road
Oakville, Ontario
L6H 6C9
Phone: +1-905 829 9533
Telefax: +1-905 829 9512

China
GRUNDFOS Pumps (Shanghai) Co. Ltd.
10F The Hub, No. 33 Suhong Road
Minhang District
Shanghai 201106
PRC
Phone: +86 21 612 252 22
Telefax: +86 21 612 253 33

Croatia
GRUNDFOS CROATIA d.o.o.
Buzinski prilaz 38, Buzin
HR-10010 Zagreb
Phone: +385 1 6595 400
Telefax: +385 1 6595 499
www.hr.grundfos.com

GRUNDFOS Sales Czechia and Slovakia s.r.o.
Čajkovského 21
779 00 Olomouc
Phone: +420-585-716 111

Denmark
GRUNDFOS DK A/S
Martin Bachs Vej 3
DK-8850 Bjerringbro
Tlf.: +45-87 50 50 50
Telefax: +45-87 50 51 51
E-mail: info_GDK@grundfos.com
www.grundfos.com/DK

Estonia
GRUNDFOS Pumps Eesti OÜ
Peterburi tee 92G
11415 Tallinn
Tel: + 372 606 1690
Fax: + 372 606 1691

Finland
OY GRUNDFOS Pumput AB
Trukkikuja 1
FI-01360 Vantaa
Phone: +358-(0) 207 889 500

France
Pompes GRUNDFOS Distribution S.A.
Parc d'Activités de Chesnes
57, rue de Malacombe
F-38290 St. Quentin Fallavier (Lyon)
Tél.: +33-4 74 82 15 15
Télécopie: +33-4 74 94 10 51

Germany
GRUNDFOS GMBH
Schlüterstr. 33
40699 Erkrath
Tel.: +49-(0) 211 929 69-0
Telefax: +49-(0) 211 929 69-3799
e-mail: infoservice@grundfos.de
Service in Deutschland:
e-mail: kundendienst@grundfos.de

Greece
GRUNDFOS Hellas A.E.B.E.
20th km. Athinon-Markopoulou Av.
P.O. Box 71
GR-19002 Peania
Phone: +0030-210-66 83 400
Telefax: +0030-210-66 46 273

Hong Kong
GRUNDFOS Pumps (Hong Kong) Ltd.
Unit 1, Ground floor
Siu Wai Industrial Centre
29-33 Wing Hong Street &
68 King Lam Street, Cheung Sha Wan
Kowloon
Phone: +852-27861706 / 27861741
Telefax: +852-27858664

Hungary
GRUNDFOS Hungária Kft.
Park u. 8
H-2045 Törökbálint,
Phone: +36-23 511 110
Telefax: +36-23 511 111

India
GRUNDFOS Pumps India Private Limited
118 Old Mahabalipuram Road
Thoraipakkam
Chennai 600 096
Phone: +91-44 2496 6800

Indonesia
PT. GRUNDFOS POMPA
Graha Intirub Lt. 2 & 3
Jln. Cililitan Besar No.454. Makasar,
Jakarta Timur
ID-Jakarta 13650
Phone: +62 21-469-51900
Telefax: +62 21-460 6910 / 460 6901

Ireland
GRUNDFOS (Ireland) Ltd.
Unit A, Merrywell Business Park
Ballymount Road Lower
Dublin 12
Phone: +353-1-4089 800
Telefax: +353-1-4089 830

Italy
GRUNDFOS Pompe Italia S.r.l.
Via Gran Sasso 4
I-20060 Truccazzano (Milano)
Tel.: +39-02-95838112
Telefax: +39-02-95309290 / 95838461

Japan
GRUNDFOS Pumps K.K.
1-2-3, Shin-Miyakoda, Kita-ku,
Hamamatsu
431-2103 Japan
Phone: +81 53 428 4760
Telefax: +81 53 428 5005

Korea
GRUNDFOS Pumps Korea Ltd.
6th Floor, Aju Building 679-5
Yeoksam-dong, Kangnam-ku, 135-916
Seoul, Korea
Phone: +82-2-5317 600
Telefax: +82-2-5633 725

Latvia
SIA GRUNDFOS Pumps Latvia
Deglava biznesa centrs
Augusta Deglava ielā 60, LV-1035, Rīga,
Tālr.: + 371 714 9640, 7 149 641
Fakss: + 371 914 9646

Lithuania
GRUNDFOS Pumps UAB
Smolensko g. 6
LT-03201 Vilnius
Tel: + 370 52 395 430
Fax: + 370 52 395 431

Malaysia
GRUNDFOS Pumps Sdn. Bhd.
7 Jalan Peguam U1/25
Glenmarie Industrial Park
40150 Shah Alam
Selangor
Phone: +60-3-5569 2922
Telefax: +60-3-5569 2866

Mexico
Bombas GRUNDFOS de México S.A. de C.V.
Boulevard TLC No. 15
Parque Industrial Stiva Aeropuerto
Apodaca, N.L. 66600
Phone: +52-81-8144 4000
Telefax: +52-81-8144 4010

Netherlands
GRUNDFOS Netherlands
Veluwezoom 35
1326 AE Almere
Postbus 22015
1302 CA ALMERE
Tel.: +31-88-478 6336
Telefax: +31-88-478 6332
E-mail: info_gnl@grundfos.com

New Zealand
GRUNDFOS Pumps NZ Ltd.
17 Beatrice Tinsley Crescent
North Harbour Industrial Estate
Albany, Auckland
Phone: +64-9-415 3240
Telefax: +64-9-415 3250

Norway
GRUNDFOS Pumper A/S
Strømsveien 344
Postboks 235, Leirdal
N-1011 Oslo
Tlf.: +47-22 90 47 00
Telefax: +47-22 32 21 50

Poland
GRUNDFOS Pompy Sp. z o.o.
ul. Klonowa 23
Baranowo k. Poznania
PL-62-081 Przeźmierowo
Tel: (+48-61) 650 13 00
Fax: (+48-61) 650 13 50

Portugal
Bombas GRUNDFOS Portugal, S.A.
Rua Calvet de Magalhães, 241
Apartado 1079
P-2770-153 Paço de Arcos
Tel.: +351-21-440 76 00
Telefax: +351-21-440 76 90

Romania
GRUNDFOS Pompe România SRL
Bd. Biruintei, nr 103
Pantelimon county Ilfov
Phone: +40 21 200 4100
Telefax: +40 21 200 4101
E-mail: romania@grundfos.ro

Russia
ООО Грундфос Россия
109544, г. Москва, ул. Школьная, 39-41, стр. 1
Тел. (+7) 495 564-88-00 (495) 737-30-00
Факс (+7) 495 564 88 11
E-mail grundfos.moscow@grundfos.com

Serbia
Grundfos Srbija d.o.o.
Omladinskih brigada 90b
11070 Novi Beograd
Phone: +381 11 2258 740
Telefax: +381 11 2281 769
www.rs.grundfos.com

Singapore
GRUNDFOS (Singapore) Pte. Ltd.
25 Jalan Tukang
Singapore 619264
Phone: +65-6681 9688
Telefax: +65-6681 9689

Slovakia
GRUNDFOS s.r.o.
Prievozská 4D
821 09 BRATISLAVA
Phona: +421 2 5020 1426
sk.grundfos.com

Slovenia
GRUNDFOS LJUBLJANA, d.o.o.
Leskoškova 9e, 1122 Ljubljana
Phone: +386 (0) 1 568 06 10
Telefax: +386 (0)1 568 06 19
E-mail: tehnika-si@grundfos.com

South Africa
GRUNDFOS (PTY) LTD
Corner Mountjoy and George Allen Roads
Wilbart Ext. 2
Bedfordview 2008
Phone: (+27) 11 579 4800
Fax: (+27) 11 455 6066
E-mail: lsmart@grundfos.com

Spain
Bombas GRUNDFOS España S.A.
Camino de la Fuentecilla, s/n
E-28110 Algete (Madrid)
Tel.: +34-91-848 8800
Telefax: +34-91-628 0465

Sweden
GRUNDFOS AB
Box 333 (Lunnagårdsgatan 6)
431 24 Mölndal
Tel.: +46 31 332 23 000
Telefax: +46 31 331 94 60

Switzerland
GRUNDFOS Pumpen AG
Bruggacherstrasse 10
CH-8117 Fällanden/ZH
Tel.: +41-44-806 8111
Telefax: +41-44-806 8115

Taiwan
GRUNDFOS Pumps (Taiwan) Ltd.
7 Floor, 219 Min-Chuan Road
Taichung, Taiwan, R.O.C.
Phone: +886-4-2305 0868
Telefax: +886-4-2305 0878

Thailand
GRUNDFOS (Thailand) Ltd.
92 Chaloem Phrakiat Rama 9 Road,
Dokmai, Pravej, Bangkok 10250
Phone: +66-2-725 8999
Telefax: +66-2-725 8998

Turkey
GRUNDFOS POMPA San. ve Tic. Ltd. Sti.
Gebze Organize Sanayi Bölgesi
Ihsan dede Caddesi,
2. yol 200. Sokak No. 204
41490 Gebze/ Kocaeli
Phone: +90 - 262-679 7979
Telefax: +90 - 262-679 7905
E-mail: satis@grundfos.com

Ukraine
Бізнес Центр Європа
Столичне шосе, 103
м. Київ, 03131, Україна
Телефон: (+38 044) 237 04 00
Факс.: (+38 044) 237 04 01
E-mail: ukraine@grundfos.com

United Arab Emirates
GRUNDFOS Gulf Distribution
P.O. Box 16768
Jebel Ali Free Zone
Dubai
Phone: +971 4 8815 166
Telefax: +971 4 8815 136

United Kingdom
GRUNDFOS Pumps Ltd.
Grovebury Road
Leighton Buzzard/Beds. LU7 4TL
Phone: +44-1525-850000
Telefax: +44-1525-850011

U.S.A.
GRUNDFOS Pumps Corporation
17100 West 118th Terrace
Olathe, Kansas 66061
Phone: +1-913-227-3400
Telefax: +1-913-227-3500

Uzbekistan
Grundfos Tashkent, Uzbekistan The Representative Office of Grundfos Kazakhstan in Uzbekistan
38a, Oybek street, Tashkent
Телефон: (+998) 71 150 3290 / 71 150 3291
Факс: (+998) 71 150 3292

Addresses Revised 02.09.2016

© Copyright Grundfos Holding A/S

The name Grundfos, the Grundfos logo, and **be think innovate** are registered trademarks owned by Grundfos Holding A/S or Grundfos A/S, Denmark. All rights reserved worldwide.

97920624 0916

ECM: 1192693