# Hydro Multi-E

## Systems with 2 to 4 CRE, CRIE or 2 to 3 CME pumps
## 50/60 Hz

GRUNDFOS

Table of contents


**1. System introduction . . . . . 3**
System description . . . . . 3
Applications . . . . . 3
Features and benefits . . . . . 4

**2. System data . . . . . 5**
Performance range . . . . . 5
Type key . . . . . 7
System design . . . . . 8
Operating conditions . . . . . 9

**3. Construction. . . . . 11**
System components . . . . . 11
Materials . . . . . 11
Diaphragm tank . . . . . 11
Environmental considerations. . . . . 12

**4. Control functions . . . . . 13**
Overview of functions . . . . . 13
Control modes . . . . . 13
Description of selected functions. . . . . 15
Control options . . . . . 17
Overview of inputs and outputs. . . . . 20

**5. Installation . . . . . 23**
Mechanical installation. . . . . 23
Electrical installation . . . . . 23
Hygiene. . . . . 23

**6. Sizing . . . . . 24**
Maximum flow requirement . . . . . 25
Required outlet pressure . . . . . 25
System layout. . . . . 26
Consumption profile and load profile . . . . . 26
Inlet pressure . . . . . 27
System selection. . . . . 27
Accessories for dry-running protection . . . . . 27
Optional equipment and accessories . . . . . 27
Example: How to select a system . . . . . 28

**7. Curve conditions . . . . . 29**
How to read the performance curve. . . . . 29
Understanding the curve charts . . . . . 30

**8. Curve charts and technical data . . . . . 31**
Hydro Multi-E with CRE, CRIE 1 . . . . . 31
Hydro Multi-E with CRE, CRIE 3 . . . . . 34
Hydro Multi-E with CRE, CRIE 5 . . . . . 37
Hydro Multi-E with CRE, CRIE 10 . . . . . 40
Hydro Multi-E with CRE, CRIE 15 . . . . . 43
Hydro Multi-E with CRE, CRIE 20 . . . . . 46
Hydro Multi-E with CME 3 . . . . . 48
Hydro Multi-E with CME 5 . . . . . 51
Hydro Multi-E with CME 10 . . . . . 54
Hydro Multi-E with CME 15 . . . . . 56

**9. Optional equipment . . . . . 58**
Dry-running protection . . . . . 59

**10. Accessories . . . . . 60**
Communication interface module . . . . . 60
MI 301. . . . . 60

**11. Product manuals . . . . . 61**

**12. App for downloading . . . . . 62**

**13. Grundfos Product Center . . . . . 63**

**14. Document quality feedback. . . . . 64**

# 1. System introduction

## System description

The system consists of two to four Grundfos CRE, CRIE pumps or two to three CME-A, CME-I pumps connected in parallel and mounted on a common base frame with all necessary fittings.

As standard, the system is supplied with the following components:

- a base frame
- pumps
- inlet and outlet manifolds
- a pressure switch or inlet-pressure sensors
- outlet-pressure sensors
- non-return valves
- isolating valves
- a pressure gauge
- a diaphragm tank
- a breaker cabinet.

The system is factory-tested and ready for operation on delivery.

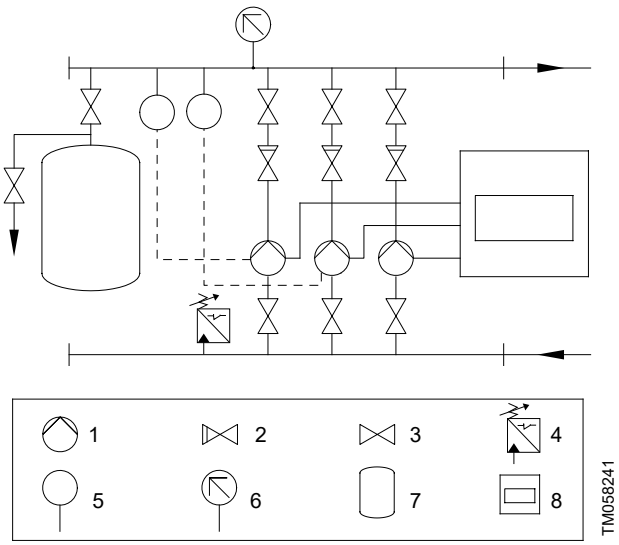


*Schematic drawing of systems with three pumps*

| Pos. | Description |
|---|---|
| 1 | Pump |
| 2 | Non-return valve |
| 3 | Isolating valve |
| 4 | Pressure switch or inlet-pressure sensor |
| 5 | Outlet-pressure sensor |
| 6 | Pressure gauge |
| 7 | Diaphragm tank |
| 8 | Breaker cabinet |

The pumps incorporated in the system are fitted with the new-generation MGE motors. The motors are permanent-magnet motors with a high-efficiency frequency converter. The motors ensure an even higher efficiency than the previous version of the system.

The MGE motors from 0.37 to 11 kW have a total efficiency which exceeds the Super Premium Efficiency EuP IE5 level according to IEC 60034-30-1.

Constant pressure is the standard setup from factory. The system with pumps in this range offers additional functions. See section Overview of functions.

**Related information**

*Overview of functions*

## Applications

The system is designed for pressure boosting of clean water in places such as:

- hotels
- hospitals
- schools
- office buildings
- industry
- irrigation
- wash and clean
- apartment buildings
- blocks of flats.

### Examples of applications

The Hydro Multi-E systems are the ideal choice for a number of applications characterised by a demand for variable flow at constant pressure. The systems are suited for water supply and pressure boosting as well as for industrial applications.

Depending on the application, the systems offer energy savings, increased comfort and improved processing.

**Systems in the industry market**

The industry market uses a large number of Hydro Multi-E systems in many different applications. Demands on system performance and mode of operation make speed control a must in many applications.

Some of the applications in which the systems are often used are listed below.

**Constant pressure**

- Water supply
- washing and cleaning
- water distribution
- humidifying application
- water treatment
- process boosting.

**Example:** Within industrial water supply, the Hydro Multi-E system with integrated pressure sensors is used to ensure a constant pressure in the pipe system. From the feedback sensor, the system receives inputs about changes of pressure as a result of changes in the consumption. The system responds to the input by adjusting the speed until the pressure is equalised. The constant pressure is stabilized once more on the basis of a preset setpoint.

**Constant temperature**

- Air-conditioning
- industrial cooling
- casting and moulding tools.

**Example:** In industrial cooling applications, the Hydro Multi-E system with a temperature sensor increases the comfort and lowers the operating costs.

The system continuously adapts its performance to the changing demands reflected in the differences in temperature of the liquid circulating in the cooling applications. Thus, the lower the demand for cooling, the smaller the quantity of liquid circulated in the system and vice versa.

**Systems in the commercial building market**

The Hydro Multi-E system in the commercial building market is used to maintain a constant pressure or a constant temperature based on a variable flow.

**Constant pressure**

- Water supply in high-rise buildings, such as office buildings and hotels.

The Hydro Multi-E system with pressure sensors is used for water supply in high-rise buildings to ensure a constant pressure even at the highest draw-off point. As the consumption pattern and thus the pressure changes during the day, the system continuously adapts its performance until the pressure is equalized.

**Constant temperature**

- Air-conditioning in hotels and schools
- building cooling.

**Example:** The Hydro Multi-E systems are an excellent choice for buildings where a constant temperature is essential. The system keeps the temperature constant in air-conditioned, high-rise glass buildings, irrespective of the seasonal fluctuations of the outdoor temperature and various heat impacts inside the building.

## Features and benefits

**Plug-and-pump solution**

The system is supplied as a complete preassembled system mounted on a base frame.

**User-friendliness**

The system is a highly intelligent system. It can control more than one speed-controlled pumps in cascade. This system has advanced control functions for startup and operation. The pump is fitted with an operating panel for complete control of the system.

**Perfect constant-pressure control**

The speed-controlled pumps are perfectly controlled and adjusted by the PI controller of the system to deliver the correct pressure at the required flow.

**Reliability**

The Grundfos pumps are known for their reliability and long service life.

The PI controller is protected inside the pump and this has been proven to be a very reliable solution.

**Multi-pump function**

All pumps that have an outlet-pressure sensor can take control of the entire system. This means that the system continues to operate as a system even if one or more of the pumps or sensors are unavailable.

**Redundant sensor**

The system is supplied with two outlet-pressure sensors as standard. Therefore, the system can operate correctly even if one of the sensor is defective.

**Dry-running protection**

Pressure sensors installed on the inlet manifold provide accurate readings of the inlet pressure and provide feedback to the pumps for dry-running protection.

**Tested and ready to use**

Before delivery, all systems are pressure-tested and function-tested according to Grundfos standard.

**Low energy consumption**

The system ensures low energy consumption through speed-controlled pumps, automatic cascade control of the pumps and highly efficient low-flow operation. The highly efficient motors and pumps also contribute to the overall high efficiency of the system.

**Proportional pressure mode**

The system can automatically adjust the setpoint to match the actual flow rate to save energy and ensure optimum comfort. This function can be used in applications with a large pipe system, for instance, a village supplied with water from a pumping station or waterworks.

# 2. System data

## Performance range

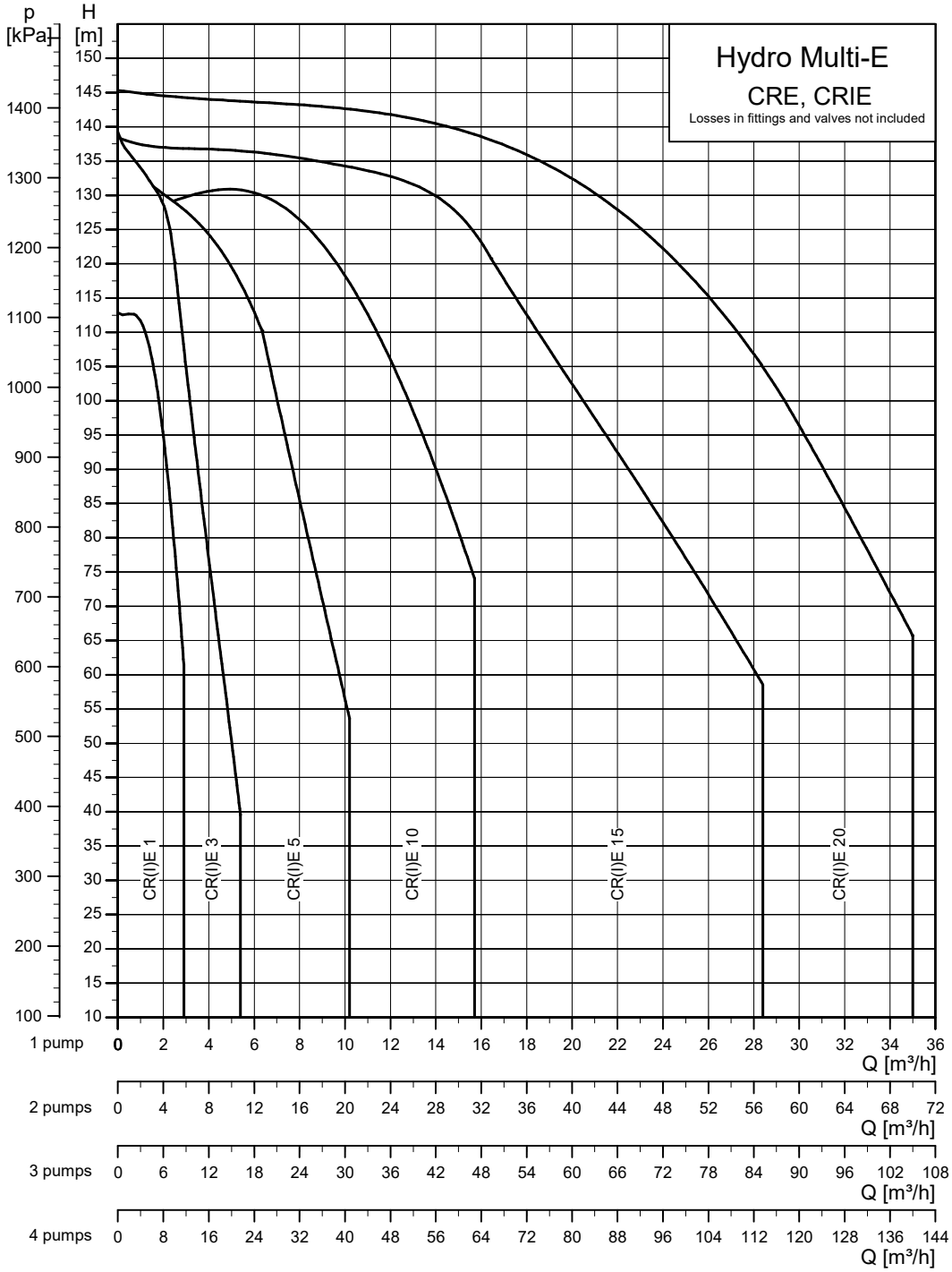


*Performance range, Hydro Multi-E CRE, CRIE*

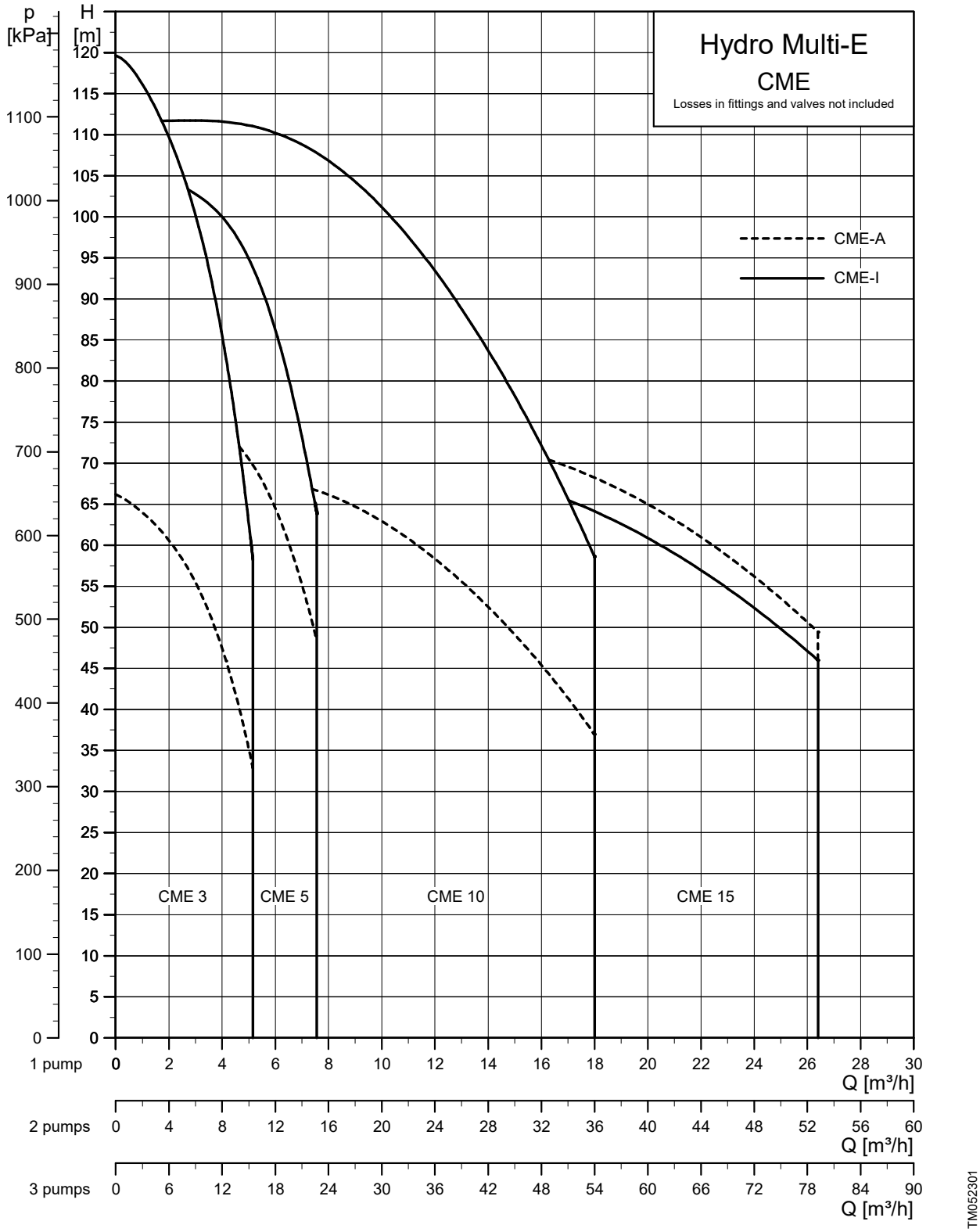


*Performance range, Hydro Multi-E CME*

# Type key

### Example: Hydro Multi-E 2 CRIE 15-3 U7 A-A-A-A-ABC

| Code | Explanation | | Designation |
|---|---|---|---|
| Hydro Multi | | | System name |
| -E | E: All pumps with E-motor | | System type |
| 2 | | | Number of main pumps |
| CRIE 15-3 | | | Pump type |
| U7 | U1: 3 × 380-415 V, N, PE, 50/60 Hz<br>U2: 3 × 380-415 V, PE, 50/60 Hz<br>U7: 1 × 200-240 V, PE, 50/60 Hz<br>U8: 1 × 200-240 V, N, PE, 50/60 Hz<br>UJ: 1 × 208-230 V, PE, 60Hz<br>UK: 3 × 208-230 V, PE, 60Hz<br>UL: 3 × 460-480 V, PE, 60Hz<br>UX: Customised variant (special voltage rating) | | Voltage code |
| A- | A: Systems with the breaker cabinet mounted on the system (right side)<br>B: System with the wall-mounted breaker cabinet and 5 m cable<br>C: Systems with the breaker cabinet mounted on the system (left side)<br>O: Other control panel<br>X: Customised variant | | Design |
| A- | A: E | | Starting method |
| A- | A: Stainless steel manifold and base frame(s), with standard valves<br>B: Stainless steel manifold, base frame(s) and valves<br>C: Galvanised steel manifold and base frame(s), with standard valves (for CME-A pumps only)<br>G: Galvanised steel manifold and base frame(s), with standard valves (for CRIE, CME-I pumps)<br>H: Black painted carbon steel manifold and base frame, with standard valves<br>I: Stainless steel manifold, black painted base frame(s), with standard valves<br>J: Black painted mild steel manifold and base frame(s), with standard valves<br>P: Stainless steel manifold, galvanised steel base frame, with standard valves<br>X: Customised material combination | | Material combination |
| A- | A: International range<br>B: UK range<br>C: Indian range<br>E: Italian range<br>F: French range<br>G: Chinese range<br>H: Korean range | I: APAC range<br>J: Australian range<br>K: Brazil range<br>N: Dutch range<br>P: Polish range<br>U: US range<br>Z: UAE range | Product range |
| ABC | A: Standard hydraulic<br>C: Outlet sensor on each pump<br>D: Sensor as dry-running protection<br>E: No dry-running protection<br>F: Level switch for dry-running protection<br>G: CIM module included<br>K: No inlet manifold | L: Non-return valve on the inlet side<br>M: Pressure gauge on the inlet side<br>O: PN 25 pressure rating<br>S: Customised variant<br>T: Certificate<br>U: Undersized motors<br>X: More than three options | Options |

## System design

The system has different designs according to number of pumps and location of the breaker cabinet.

| Design | Description | Example |
|---|---|---|
| A | As standard, the breaker cabinet is mounted on the right side of the system. | 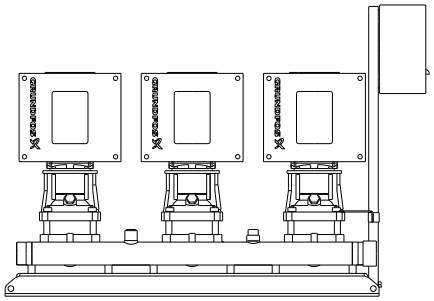 TM088309 *System with right-side breaker cabinet* |
| B | A breaker cabinet for wall-mounting and a five-metre flexible cable are supplied with the system.<br>With this option, the breaker cabinet does not necessarily have to be installed in the same room as the system. The pumps are wired with the cable, but not wired to the breaker cabinet. This can give the customers the opportunity to adjust the cable length to their needs. | 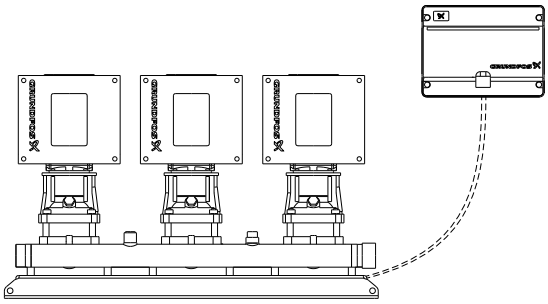 TM088310 *System with wall-mounted breaker cabinet* |
| C | As an alternative, the system can be supplied with the breaker cabinet mounted on the left side. | 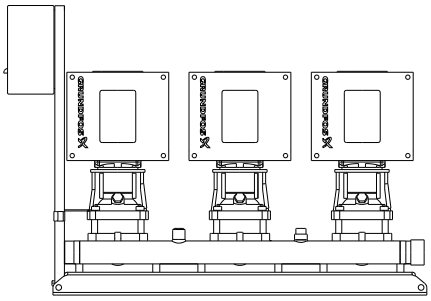 TM088311 *System with left-side breaker cabinet* |

Other designs are also available per request.

## Operating conditions

Liquid temperature: 5-60 °C.

Ambient temperature: 0-40 °C.

Enclosure class: IP54.

Insulation class: F.

### Minimum inlet pressure

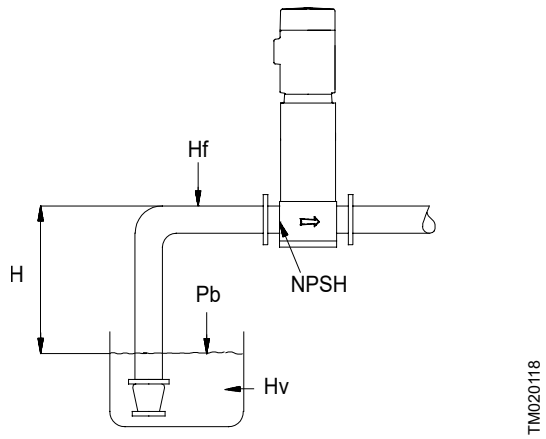


*Parameters for the calculation of minimum inlet pressure*

The minimum inlet pressure "H" in metres of head required to avoid cavitation in the pumps can be calculated as follows.

| | |
|---|---|
| H | pb × 10.2 - NPSH - Hf - Hv - Hs |
| pb | Barometric pressure in bar. Barometric pressure can be set to 1 bar.<br>In closed systems, $p_b$ indicates the system pressure in bar. |
| NPSH | Net Positive Suction Head in metres of head<br>The NPSH value can be read from the NPSH curve at the highest flow which the individual pump delivers. |
| Hf | Friction loss in the inlet manifold in metres of head at the highest flow which the individual pump delivers.<br>**Note:** If a non-return valve is installed on the inlet side of the pump, the friction loss in the valve must be added. See the manufacturer's data. |
| Hv | Vapour pressure in metres of head |
| Hs | Safety margin of min. 0.5 metres of head |

See Grundfos Product Center for more information.

In some regions, the system can be equipped with a low inlet manifold, which makes it more suitable for suction lift operation. Contact Grundfos for further information.

#### Non-return valve on the inlet side

For suction-lift operation, the non-return valve must be moved to the inlet side. This is often used in combination with a foot valve if the system is drawing water from a tank.

#### Example

| | |
|---|---|
| pb | 1 bar |
| Pump type | CRE 15, 50 Hz |
| Flow rate | 15 $m^3/h$ |
| NPSH | 1.2 metres of head |
| Hf | 3 metres of head |
| Liquid temperature | +60 °C |
| Hv | 2.1 metres of head |
| H | pb × 10.2 - NPSH - Hf - Hv - Hs [metres of head] |
| H | 1 × 10.2 - 1.2 - 3.0 - 2.1 - 0.5 = 3.4 metres of head |

This means that each pump can operate with a maximum suction lift of 3.4 metres of head.

Pressure calculated in bar: 3.4 × 0.0981 = 0.33.

Pressure calculated in kPa: 3.4 × 9.81 = 33.4.

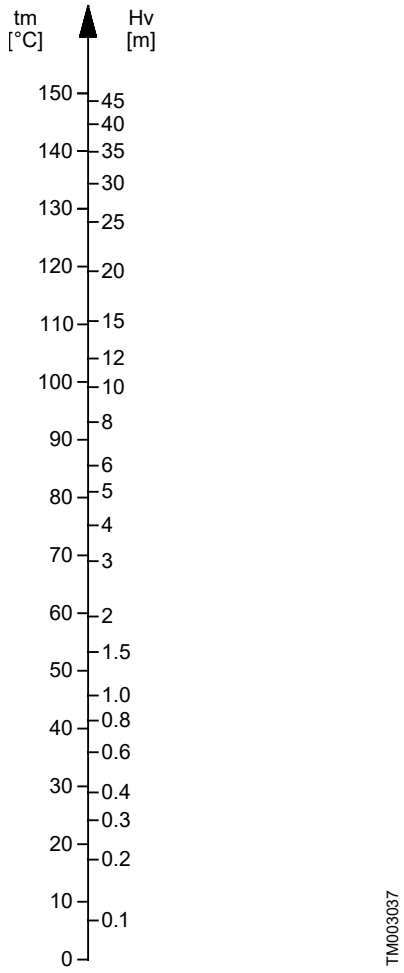


### Maximum inlet pressure

There is no maximum inlet pressure for CME pumps.

The total of the actual inlet pressure and the pressure at which the pump is operating against a closed valve must always be lower than the maximum system pressure.

## Maximum operating pressure

| Pump type | Maximum permissible operating pressure [bar] | |
|---|---|---|
| | 10 | 16 |
| CME-A 3-3, 3-5 | ● | |
| CME-I 3-3, 3-5 | ● | |
| CME-I 3-7, 3-9 | | ● |
| CME-A 5-3, 5-4, 5-5, 5-6 | ● | |
| CME-I 5-3, 5-4, 5-5, 5-6 | ● | |
| CME-I 5-8 | | ● |
| CME-A 10-2, 10-3 | ● | |
| CME-I 10-2, 10-3 | ● | |
| CME-I 10-4 | ● | |
| CME-I 10-5 | | ● |
| CME-A 15-1, 15-2, 15-3 | ● | |
| CME-I 15-1, 15-2, 15-3 | ● | |
| CRE, CRIE 1-4, 1-6 | ● | |
| CRE, CRIE 1-9, 1-13 | | ● |
| CRE, CRIE 3-2, 3-4, 3-5, 3-8 | ● | |
| CRE, CRIE 3-11, 3-15 | | ● |
| CRE, CRIE 5-2, 5-4, 5-5, 5-9 | ● | |
| CRE, CRIE 5-12, 5-14 | | ● |
| CRE, CRIE 10-1, 10-2, 10-3, 10-5 | ● | |
| CRE, CRIE 10-6, 10-9 | | ● |
| CRE, CRIE 15-1, 15-2, 15-3, 15-4 | ● | |
| CRE, CRIE 15-5, 15-7 | | ● |
| CRE, CRIE 20-1, 20-2, 20-3 | ● | |
| CRE, CRIE 20-4, 20-7 | | ● |

Make sure that the total system pressure does not exceed the maximum permissible operating pressure.

# 3. Construction

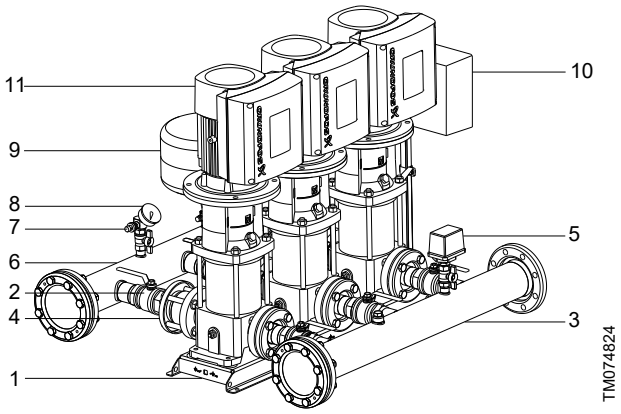


*System with CRE, CRIE pumps*

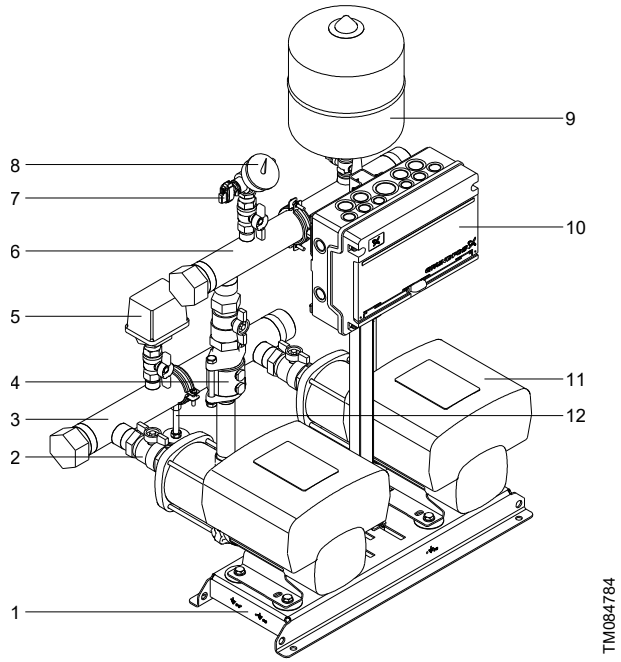


*System with CME pumps*

| Pos. | Description | Quantity |
|---|---|---|
| 1 | Base frame | 1 |
| 2 | Isolating valve | 2 per pump |
| 3 | Inlet manifold | 1 |
| 4 | Non-return valve | 1 per pump |
| 5 | Pressure switch | 1 |
| 6 | Outlet manifold | 1 |
| 7 | Outlet-pressure sensor | 2 |
| 8 | Pressure gauge | 1 |
| 9 | Diaphragm tank | 1 |
| 10 | Breaker cabinet | 1 |
| 11 | Pump | 2-4 [1)] |
| 12 | Support foot | 1-2 [2)] |

1) Only systems with CRE, CRIE pumps are available with four pumps.

2) Only systems with CME pumps are available with support foot.

## System components

The system has a base frame fitted with these components.

Components fitted on the inlet side:

- an inlet manifold
- one isolating valve per pump
- a pressure switch.

Components fitted on the outlet side:

- an outlet manifold
- one non-return valve per pump
- one isolating valve per pump
- two outlet-pressure sensors
- a diaphragm tank
- a pressure gauge.

The system is fitted with a breaker cabinet for switching the power supply on and off.

## Materials

The system incorporates the well-known high-quality Grundfos CRE, CRIE or CME pumps. However, the quality extends beyond the pumps. As standard, the system is supplied with stainless-steel manifolds (EN 1.4571/AISI 316 Ti) manufactured using an extrusion process that creates a smooth surface from the connecting pipe to the manifold. This minimises the risk of stagnant water and reduces noise and friction loss.

In some regions, galvanised-steel manifolds are also available. Contact Grundfos for further information.

| Pump type | Material specification | | | |
|---|---|---|---|---|
| | Manifold | Base frame | Isolating valve | Non-return valve |
| CRE<br>CRIE<br>CME-I<br>CME-A | Stainless steel<br>EN 1.4571 /<br>AISI 316 Ti | Stainless steel<br>EN 1.4571 /<br>AISI 316 Ti | CW617N/EN 12165 hot-pressed brass, chrome plated | POM (Polyoxymethylene) |

## Diaphragm tank

You must precharge the diaphragm tank with pressure to ensure optimum operation.

- Precharge pressure = 0.7 × setpoint

You must measure the diaphragm tank precharge pressure in a pressureless system.

We recommend that you refill the diaphragm tank with nitrogen.

## Environmental considerations

We manufacture our motors and other products with a high degree of consideration for the environment in respect of materials, production methods, energy-saving operation and recycling of as many materials as possible. Grundfos A/S is certified as environmentally friendly in accordance with ISO 14001.

Grundfos A/S is approved in accordance with European certification standard EMAS.

Grundfos A/S holds an ISO 9001 certificate.

### CE marking

The system on the European market is CE-marked.

TM021695

*CE marking*

# 4. Control functions

## Overview of functions

| Control modes | Hydro Multi-E |
|---|---|
| **Pressure control** | |
| Constant pressure | ● |
| Proportional pressure | ❍ [3] |
| Constant differential-pressure | ❍ [3] |
| **Flow control** | |
| Constant flow | ❍ [3] |
| Constant level | ❍ [3] |
| **Temperature control** | |
| Constant temperature | ❍ [3] |
| Constant differential-temperature | ❍ [3] |
| **Functions** | |
| Automatic cascade control | ● |
| Dry-running protection (water shortage and inlet pressure measurement) | ● |
| Pump alternation | ● |
| Limit exceeded | ● |
| Multi-pump function | ● |
| Number of starts per hour | ● |
| Stop function | ● |
| Pipe-filling function | ● |
| External setpoint influence | ● |
| Predefined setpoint | ● |
| Alarm handling | ● |
| **Communication options** [4] | |
| GENIbus | ❍ |
| LonWorks (Single) | ❍ |
| LonWorks (Multi) | ❍ |
| PROFIBUS DP | ❍ |
| Modbus RTU | ❍ |
| BACnet MS/TP | ❍ |
| Modbus TCP, BACnet IP, PROFINET, GiC/GRM IP, EtherNet IP | ❍ |
| Ethernet connection to Grundfos iSolutions Cloud (GiC) | ❍ |

3) May require additional sensors.

4) Communication interface module or unit required.

● Available as standard.

❍ Available on request.

## Control modes

Constant pressure is the factory standard setup.

### Constant pressure

The constant-pressure control ensures that the system delivers constant pressure despite a change in consumption.

When taps are opened, water is drawn from the diaphragm tank. The pressure drops to a set cut-in pressure, and the first speed-controlled pump starts. The speed of the pump in operation increases continuously to meet the demand. As the consumption rises, more pumps are cut in until the performance of the pumps in operation corresponds to the demand.

The system regularly estimates whether pumps are to be cut in or out to ensure the best efficiency. When the water consumption decreases, the system will detect low flow and go to the stop function mode.

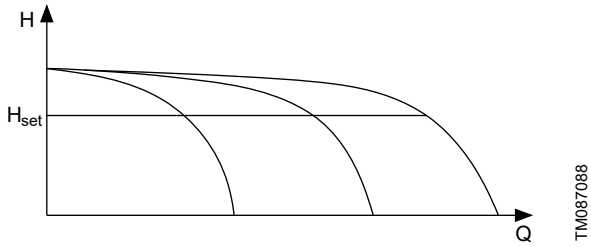


*Constant-pressure mode*

### Proportional pressure

This function can be used in applications with a large pipe system, for instance a village supplied with water from a pumping station or waterworks.

Purpose are:

- to deliver the required water at all times
- to compensate for friction loss
- to keep energy consumption at a minimum
- to ensure the highest comfort level at tapping points, etc.
- to minimise water loss from leaks
- to reduce wear and tear on pipes.

With high flow rate, the pressure loss in the pipe system is relatively high. To deliver a system pressure of 5 bar in such a situation, the outlet pressure of the system must be set to 6 bar if the pressure loss in the pipe system is 1 bar.

With low flow rate, the pressure loss in the pipe system may only be 0.2 bar. Here, the system pressure is 5.8 bar if the setpoint is fixed to 6 bar. That 5.8 bar is too high compared with the peak situation above.

To avoid this excessive system pressure, the proportional-pressure function automatically adapts the setpoint to the actual flow rate. The adaptation can be linear or square. Such an automatic adaptation offers you large energy savings and optimum comfort at the tapping point.

The proportional-pressure mode is a standard feature of the system and can also operate without remote sensors in the system. In this case, the controller operates based on a pressure sensor placed on the outlet manifold of the system. Once the controller is programmed with the percentage of the friction head and the preferred adaptation mode (linear or square), it automatically adjusts the head to compensate for the friction loss in the system.

To use this function, the system needs the pump data and the outlet/inlet pressure to calculate the flow. The pump data can be set with the operating panel or Grundfos GO. The outlet pressure is always known. If an inlet sensor is installed, the inlet pressure is also available. If no inlet sensor is installed, a fixed inlet pressure can be set with the operating panel or Grundfos GO.

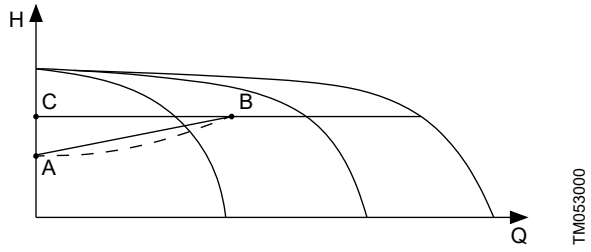


*Proportional pressure*

| Pos. | Description |
|---|---|
| A | Zero head |
| B | $Q_{max}$ in cascade |
| C | Maximum pressure (standard setpoint) |

## Constant differential-pressure

Constant differential-pressure can be used in circulating systems with a pipe system with low pressure loss and with control valves to generate a variable flow.

Examples:

- Heating systems with two-way valves
- air-conditioning systems with two-way valves.

The pressure drop in the control valves is higher than 50 % of the total pressure drop.

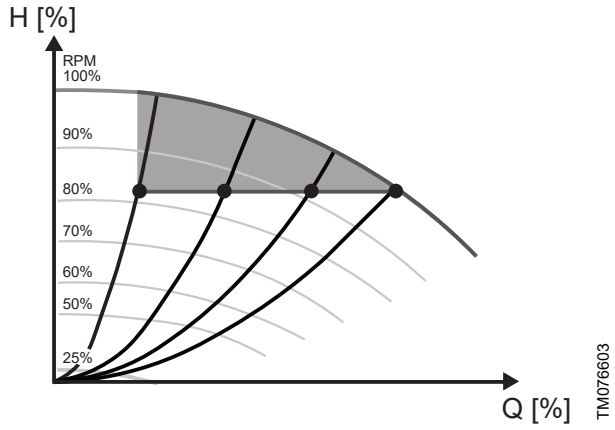


*Constant differential-pressure*

The differential pressure of the pump is kept constant, independently of the flow rate.

The pump is controlled according to a constant differential-pressure measured across the pump. This means that the system offers constant differential-pressure in the Q-range of 0 to $Q_{max}$, represented by the horizontal line in the QH diagram.

## Constant flow

Constant flow is used in systems where there is a demand for a constant flow independent of the pressure loss.

Examples:

- Chillers for air conditioning
- flow filters
- heating surfaces
- cooling surfaces.

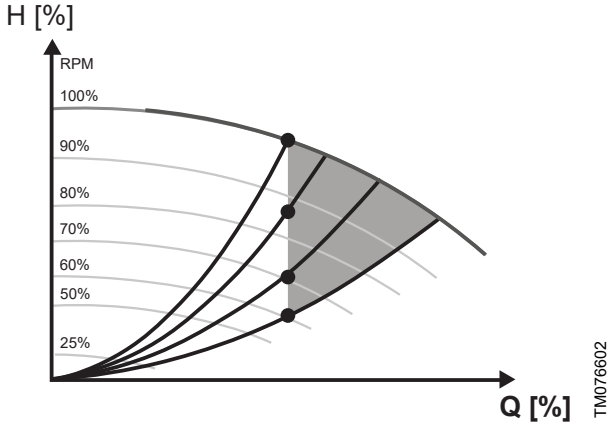


*Constant-flow mode*

## Constant temperature

This control mode ensures a constant temperature. Constant temperature is a comfort control mode that you can use in domestic hot-water systems to control the flow to maintain a fixed temperature in the system. See the figure below.

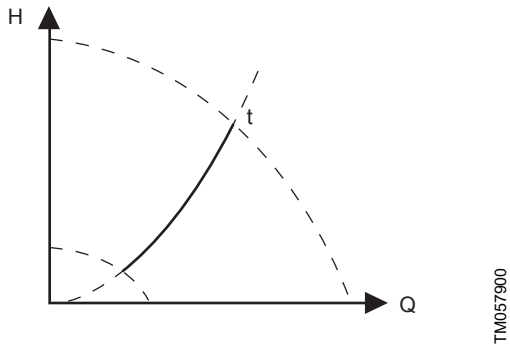


*Constant temperature*

This control mode requires a temperature sensor placed at the location where the temperature is to be controlled. See the examples below.

**Constant temperature**

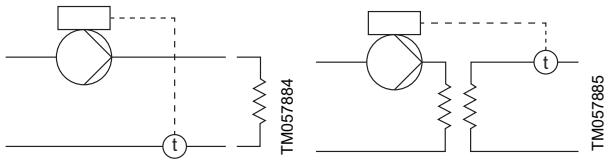


# Description of selected functions

## Automatic cascade control

The cascade control ensures that the performance of the system is automatically adapted to consumption by switching pumps on or off. The system thus runs as energy-efficiently as possible with constant pressure and a limited number of pumps.

## Dry-running protection

This function is very important as dry running may damage bearings and shaft seals.

The inlet pressure of the system or the water level in a possible tank on the inlet side is monitored. If the inlet pressure or the water level becomes too low, all pumps will be stopped.

Level switches, pressure switches or analog sensors can be used to signal the water shortage at a set level.

## Pump alternation

This function ensures that the operating hours are distributed evenly on the pumps over time.

## Limit exceeded

The limit exceeded function is used for monitoring the parameters which are essential to the system, for example, the inlet pressure or the drinking water temperature. Once the parameters exceed the predetermined limits, the pump will react to the possible abnormal operating conditions with alarms or warnings.

## Multi-pump function

All pumps that have an outlet-pressure sensor connected can function as master pumps and control the system. As standard, the system is supplied with two outlet-pressure sensors, one connected to pump 1 and the other to pump 2.

Normally the pump with the lowest number is the master pump. From factory, the master pump is marked with number 1.

If the master pump is switched off or stopped due to an alarm, one of the other pumps will automatically take over the control of the system. Thereby, this can increase the reliability and prevent the stop of operation.

As an option, the system can be equipped with only one outlet-pressure sensor. In that case, the system will stop if the pump or sensor fails.

The system can also be fitted with sensors on all pumps for maximum reliability.

## Number of starts per hour

This function limits the number of pump starts and stops per hour.

Each time a pump starts or stops, the system calculates when the next pump is allowed to start or stop in order not to exceed the permissible number of starts per hour.

This function always allows pumps to be started to meet the requirement. However, pump stops can be delayed to avoid exceeding the permissible number of starts or stops per hour.

## Stop function

The stop function enables periodic flow check by reducing the speed for a short time, thus checking the change in pressure. If there is no or a small change in pressure, the pump detects low flow.

When the pump detects low flow, the speed increases until the stop pressure (actual setpoint + 0.5 x ΔH) is reached, and the pump stops. When the pressure decreases to the start pressure (actual setpoint - 0.5 x ΔH), the pump will restart.

ΔH indicates the difference between start and stop pressures.

The stop function has the following benefits:

- It reduces the energy consumption and improves the system efficiency.
- It avoids unnecessary heating of the pumped liquid.
- It reduces the wear of the shaft seals.
- It reduces the operation noise.

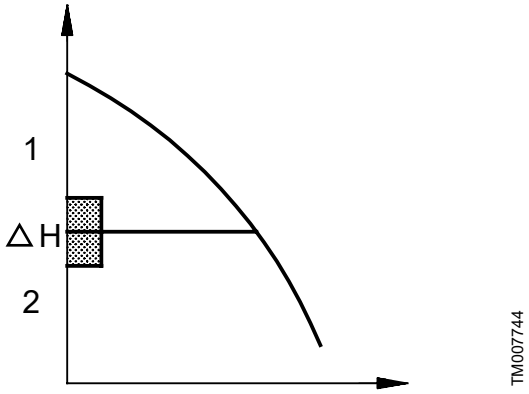


*Start and stop pressures*

| Pos. | Description |
|---|---|
| 1 | Stop pressure |
| 2 | Start pressure |

ΔH is factory-set to 10 % of the actual setpoint. ΔH can be set within the range from 5 to 30 %.

The system is fitted with a diaphragm tank of an appropriate size to accommodate the operation in low flow.

The precharge pressure must be 0.7 times the actual setpoint.

## Pipe-filling function

This function ensures a soft start of systems with empty pipes. The function has two phases:

1. The pipes are slowly filled with water.
2. When the pressure sensor of the system detects that the pipes are filled with water, the pressure increases until it reaches the setpoint.

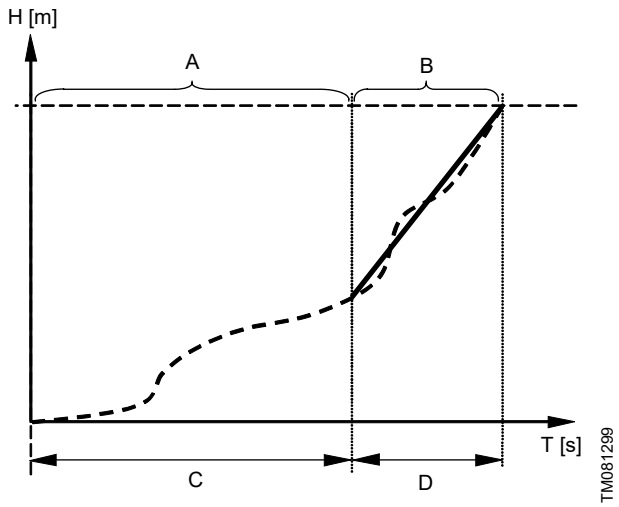


*Filling and pressure buildup phases*

| Pos. | Description |
|---|---|
| A | 1. Filling phase |
| B | 2. Pressure buildup phase |
| C | Filling time |
| D | Ramp time |

The function can be used to prevent water hammer in high-rise buildings with unstable power supply or in irrigation systems.

## External setpoint influence

This function is used to influence the setpoint via an external setpoint signal. The value of the external setpoint signal is used in a formula to calculate a "new" setpoint, the actual setpoint. The function is often used to adjust the setpoint depending on an external input from a Grundfos VFS (Vortex flow sensor).

## Predefined setpoint

This function is used to change between predefined setpoints via digital input signals. This means that the operator can easily change the setpoint.

Due to the combination of digital inputs, up to seven predefined setpoints can be configured.

## Alarm handling

This function determines how the pump must react in case of a sensor failure.

Alarm or warning types:

- **Warning**
  A warning. There is no change in the operating mode.
- **Stop**
  The pump stops.
- **Min.**
  The pump reduces the speed to minimum.
- **Max.**
  The pump increases the speed to maximum.
- **User defined speed**
  The pump runs at the speed set by the user.

Affected inputs:

- **Analog input 1**
- **Analog input 2**
- **Analog input 3**
- **Grundfos Direct Sensor**
- **Pt100/1000 input 1**
- **Pt100/1000 input 2**
- **Liqtec input**.

## Control options

You can establish communication with the system in the following ways:

- the HMI operating panel on the pumps
- Grundfos GO
- Grundfos GO Link
- a building management system (BMS).

## Operating panels, HMI 200 and 201

The HMI 200 and 201 operating panels on the pump terminal box allow the operator to change the setpoint and speed, and to reset alarms and warnings.

The indicator light flashes in different sequences and provide information about the following:

- power on or off
- pump warnings
- pump alarms
- remote control.

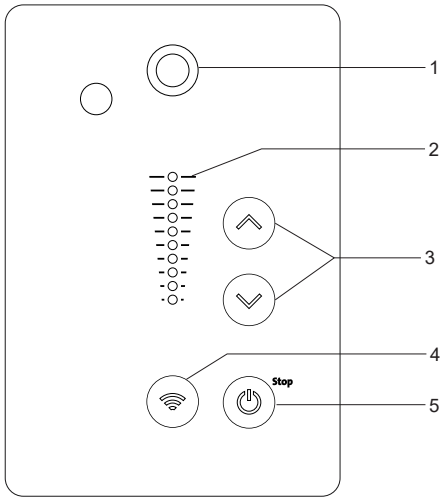


TM082873

| Pos. | Symbol | Description |
|---|---|---|
| 1 | | **Grundfos Eye:**The indicator light shows the operating status of the product. |
| 2 | - | Light fields for indication of the setpoint. |
| 3 | | **Up**/**Down**: The buttons change the setpoint. |
| 4 | | **Communication:**<br>The button enables communication with Grundfos GO and other products of the same type. |
| 5 | | **Start/Stop**: Press the button to make the product ready for operation or to start and stop the product. **Start**: If you press the button when the product is stopped, the product starts if no other functions with higher priority have been enabled. **Stop**: If you press the button when the product is running, the product always stops. When you press the button, the stop icon appears at the bottom of the display. |

## Operating panels, HMI 300 and 301

The HMI 300 and 301 operating panels on the pump terminal box allow the operator to change the setpoint and speed, and to reset alarms and warnings.

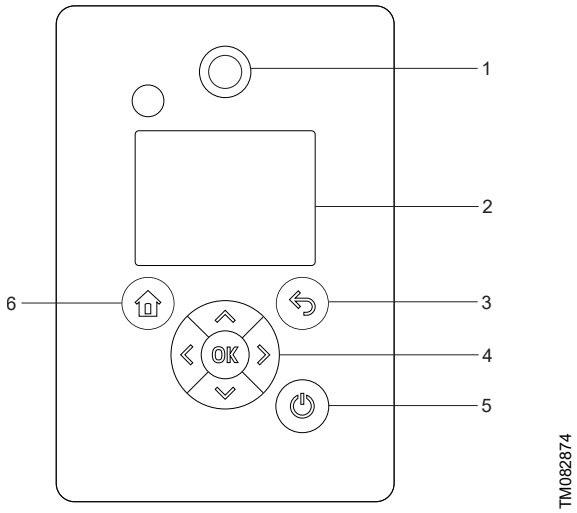


| Pos. | Symbol | Description |
|---|---|---|
| 1 | | **Grundfos Eye:**<br>The indicator light shows the operating status of the product. |
| 2 | - | Graphical colour display. |
| 3 | | **Back**:<br>Press the button to go one step back. |
| 4 | | **Left**/**Right**: Press the buttons to navigate between main menus, displays and digits. When you change the menu, the display shows the top display of the new menu. |
| | | **Up**/**Down**:<br>Press the buttons to navigate between submenus or change the value settings.<br>If you have disabled the **Enable/disable settings** function, you can enable it again temporarily by pressing these buttons simultaneously for at least 5 seconds. |
| | OK | **OK**:<br>Press the button to:<br>• save changed values, reset alarms and expand the value field<br>• enable communication with Grundfos GO and other products of the same type.<br>When you try to establish radio communication between the product and Grundfos GO or another product, the green indicator light in Grundfos Eye flashes. The controller display shows a notification that a device wants to connect to the product. Press **OK** on the product operating panel to allow communication with Grundfos GO or Grundfos GO Link and other products of the same type. |
| 5 | | **Start/Stop**: Press the button to make the product ready for operation or to start and stop the product. **Start**: If you press the button when the product is stopped, the product starts if no other functions with higher priority have been enabled. **Stop**: If you press the button when the product is running, the product always stops. When you press the button, the stop icon appears at the bottom of the display. |
| 6 | | **Home**: Press the button to go to the **Home** menu. |

## Grundfos GO

With Grundfos GO, the operator can remotely monitor and change settings of the system.

Grundfos GO can be used for the following functions:

- reading of operating data
- reading of warning and alarm indications
- setting of control mode
- setting of setpoint
- selection of external setpoint signal
- allocation of pump numbers to distinguish between pumps that are connected via Grundfos GENIbus
- selection of functions for digital inputs
- generation of reports (PDF)
- multipump setup
- displaying relevant documentation
- adjusting stop function
- pipe filling
- PI controller function
- selection of functions for analog inputs
- setting of function of relays
- adjusting limits.

For systems from 0.37 to 2.2 kW, Grundfos GO communicates with the pump via wireless radio or infrared communication.

Use Grundfos GO together with the Grundfos MI 301 mobile interface.

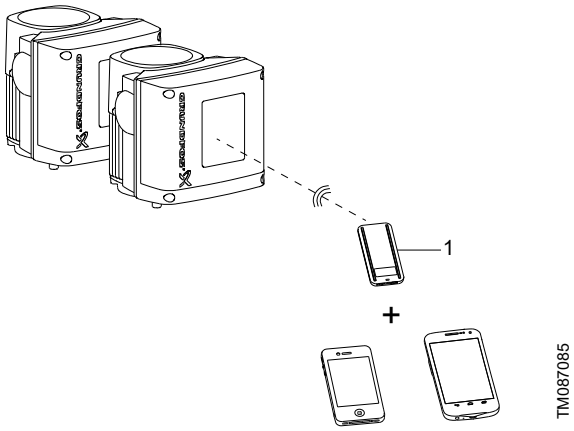


*Grundfos GO communicating with the pump via radio or infrared connection (IR)*

| Pos. | Description |
|---|---|
| 1 | Grundfos MI 301:<br>It is a separate module enabling radio or infrared communication. Use the module together with an Android or iOS-based smart device via a Bluetooth connection. |

For systems from 3 to 26 kW, Grundfos GO communicates with the pump via the built-in Bluetooth module.

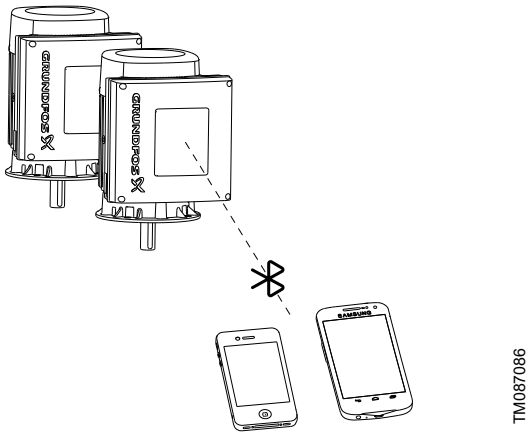


*Grundfos GO communicating with the pump via Bluetooth*

## Grundfos GO Link

The system is designed for wired or wireless communication with Grundfos GO Link.

Grundfos GO Link allows you to set functions and access status overviews, configuration and current operating parameters.

Use Grundfos GO Link together with one of the following interfaces:

- Ethernet cable (Only FM310 and FM311)
- Grundfos MI 301 - USB - Wired/wireless (Only HMI 200 and HMI 300)
- Grundfos PC Tool Link - USB - Wired.

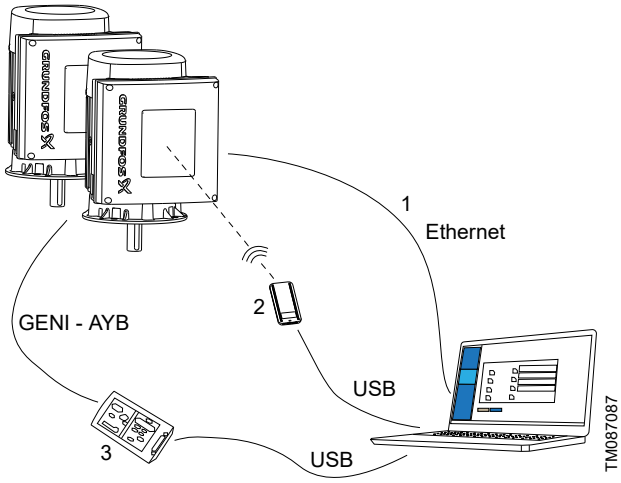


*Grundfos GO Link setup*

| Pos. | Description |
|---|---|
| 1 | Ethernet cable:<br>Standard Ethernet cable CAT5/CAT6. |
| 2 | Grundfos MI 301:<br>Separate module for radio communication. Use the module together with a USB cable to connect to a laptop. |
| 3 | Grundfos PC Tool Link:<br>Separate module for wired connection to the pump. Use the module together with a USB cable to connect to a laptop. |

## Building management system

Communication with the system is possible even though the operator is not near the system. By connecting the system to a building management system (BMS), the operator can monitor and change control modes and setpoint settings of the system.

The communication interface between the system and a central BMS varies, depending on pump size.

These systems can communicate with external systems via a Grundfos communication interface module (CIM) that can be fitted in the pumps. This means that no external communication interface is required.

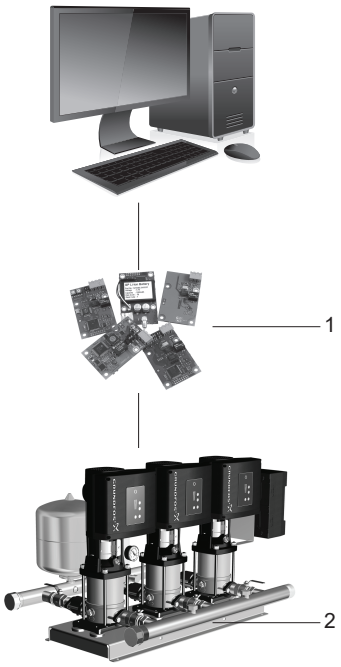


*Structure of a BMS*

| Pos. | Description |
|---|---|
| 1 | CIM |
| 2 | Hydro Multi-E |

The CIM module must always be installed in pump 1. If there is a need for redundant communication, an additional CIM module can be installed in pump 2.

When using multiple CIM modules, make sure to send the same command to both CIM modules at the same time to avoid conflicts between CIM modules.

See the installation and operating instructions of the pump for installation.

See section Communication interface module for CIM overview.

### Related information

*Communication interface module*

## Overview of inputs and outputs

| Terminals | System with FM 300 | System with FM 310 and 311 |
|---|---|---|
| Analog inputs | 3 | 3 |
| Analog output | 1 | 1 |
| Dedicated digital inputs | 2 | 2 |
| Configurable digital inputs or open-collector outputs | 2 | 2 |
| Grundfos Digital Sensor input and output | 1 | 1 |
| Pt100/1000 inputs | 2 | 2 |
| LiqTec sensor inputs | 2 | 2 |
| Signal relay outputs | 2 | 2 |
| GENIbus connection | 1 | 0 |
| GENIbus/Modbus connection | 0 | 1 |
| Safe Torque Off (STO) inputs | 0 | 2 |
| Ethernet connection | 0 | 1 |
| Bluetooth (BLE) connection [5] | 0 | 1 |

5) FM311 is without Bluetooth.

## Using the inputs and outputs

### Digital inputs

You can set the inputs to these functions:

- **Not active**
  When set to **Not active**, the input has no function.
- **Ext. stop**
  When the input is deactivated, the motor stops.
- **Min.** (minimum speed)
  When the input is activated, the motor runs at the set minimum speed.
- **Max.** (maximum speed)
  When the input is activated, the motor runs at the set maximum speed.
- **User defined speed**
  When the input is activated, the motor runs at a speed set by the user.
- **External fault**
  When the input is activated, a timer is started. If the input is activated for more than 5 seconds, the motor stops and a fault is indicated. The function depends on input from external equipment.
- **Alarm resetting**
  When the input is activated, a fault indication, if any, is reset.
- **Dry running**
  When this function is selected, a lack of inlet pressure or water shortage (dry running) can be detected. When this happens, the pump stops. The pump cannot restart as long as the input is activated. This requires the use of an accessory such as:
  - a pressure switch installed on the inlet side of the pump
  - a float switch installed on the inlet side of the pump.

- **Accumulated flow**
  When this function is selected, the accumulated flow can be registered. This requires the use of a flowmeter which can give a feedback signal as a pulse per defined volume of water.
- **Reverse rotation**
  This function reverses the direction of rotation of the motor.
- **Predefined setpoint 1**
  The function applies only to digital input 2.
  When you set digital inputs to a predefined setpoint, the pump operates according to a setpoint based on a combination of the activated digital inputs.
- **Activate output**
  When this function is selected, the related digital output is activated without affecting the pump operation.
- **Local motor stop**
  When the function is selected, the specific motor in a multimotor system setup stops without affecting the performance of the other motors in the system.

The priority of the selected functions are interdependent.

A stop command always has the highest priority.

**Analog inputs**

You can set the inputs to these functions:

- **Not active**
- **Feedback sensor**
  The sensor is used for the selected control mode.
- **Setpoint influence**
  The input signal is used for influencing the setpoint.
- **Other function**
  The sensor input is used for measuring or monitoring.

**Signal relay outputs**

You can configure the signal relays to be activated when the product changes to one of the following states:

- **Not active**
  The relay is deactivated.
- **Ready**
  The motor is running or is ready to run, and no alarms are active.
- **Alarm**
  There is an active alarm, and the motor is stopped.
- **Operating** (**Operation**)
  **Operating** equals **Running**, but the motor is still in operation when it is stopped, for example, by the **Stop function** or **Limit exceeded**.
- **Running** (**Pump running**)
  The motor shaft is rotating.
- **Warning**
  There is an active warning.
- **Limit 1 exceeded**
  When you select this function and the limit is exceeded, the signal relay is activated.
- **Limit 2 exceeded**
  When you select this function and the limit is exceeded, the signal relay is activated.
- **Limit 3 exceeded**
  When you select this function and the limit is exceeded, the signal relay is activated.
- **Limit 4 exceeded**
  When you select this function and the limit is exceeded, the signal relay is activated.
- **External fan control** (**Control of external fan**)
  When you select this function, the relay is activated if the internal temperature of the motor reaches a preset limit value. In this way the relay activates external cooling to provide additional cooling for the motor.
- **Digital input 1, state**
  Follow digital input 1. If digital input 1 is triggered, the digital output is also triggered.
- **Digital input 2, state**
  Follow digital input 2. If digital input 2 is triggered, the digital output is also triggered.
- **Digital input 3, state**
  Follow digital input 3. If digital input 3 is triggered, the digital output is also triggered.
- **Digital input 4, state**
  Follow digital input 4. If digital input 4 is triggered, the digital output is also triggered.

**Digital inputs/outputs**

You can set the digital input or output 3 and 4 to act as a digital input or digital output.

**Functions if the digital input or output is set to input:**

- **Not active**
- **Ext. stop**
- **Min.**
- **Max.**
- **User defined speed**
- **External fault**
- **Alarm resetting**
- **Dry running**
- **Accumulated flow**
- **Reverse rotation**
- **Predefined setpoint 2** (digital input/output 3)
- **Predefined setpoint 3** (digital input/output 4)
- **Local motor stop**
- **Activate output**

**Functions if the digital input or output is set to output:**

- **Not active**
- **Ready**
- **Alarm**
- **Operation**
- **Pump running**
- **Warning**
- **Limit 1 exceeded**

- **Limit 2 exceeded**
- **Limit 3 exceeded**
- **Limit 4 exceeded**
- **Digital input 1, state**
- **Digital input 2, state**
- **Digital input 3, state**
- **Digital input 4, state**

# 5. Installation

## Mechanical installation

### Location

The system is only designed for indoor installation and must not be exposed to direct sunlight.

- Install the system in a well-ventilated room to ensure sufficient cooling of the control cabinet and pumps.
- Install the system with a one-metre clearance on all sides for inspection and removal.

### Motor cooling

Observe the following to ensure adequate cooling of the motor and electronics.

- When installing the motor, make sure that the distance between the end of the fan cover and the wall or another fixed object is at least 50 mm (2 inches).
- Make sure that the ambient temperature must not exceed 40 °C.
- Keep cooling fins and fan blades clean.

### Foundation

Position the system on an even and solid surface, such as a concrete floor or foundation. If the system does not have vibration dampers, secure it to the floor or foundation with bolts.

### Pipework

The pipes connected to the system must be of adequate size. Fit expansion joints in the inlet and outlet manifolds to avoid resonance. Connect the pipes to the manifolds of the system. Fasten all screws and bolts before startup. Use pipe supports for the inlet and outlet pipes.

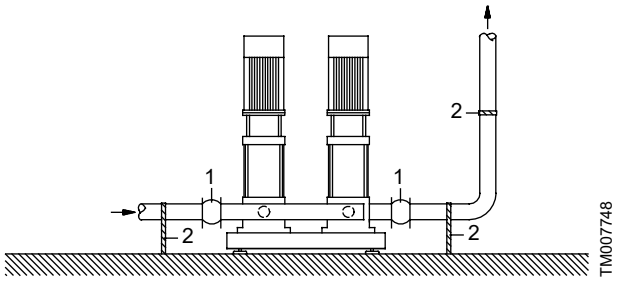


*Pipework*

| Pos. | Description |
|---|---|
| 1 | Expansion joint |
| 2 | Pipe support |

The expansion joints and pipe supports shown in above figure are not included in a standard system.

## Electrical installation

The electrical installation must be carried out by authorised persons in accordance with local regulations and the relevant wiring diagram.

- The system must be correctly earthed.
- The pumps require no external motor protection. The motors incorporate thermal protection against slow overloading and blocking (IEC 60034-11: TP 211).
- When the pumps are switched on via the power supply, they start after approximately 5 seconds.

If the system is supplied with a breaker cabinet for wall mounting, the cabinet must be mounted in accordance with local regulations.

## Hygiene

Grundfos systems are functionally tested and may therefore contain small amounts of residual water. Contaminated drinking water can endanger health, so before using the system, it must be rinsed or flushed thoroughly. This also applies if the system is not used for a longer period.

Rinsing and flushing must always be done in accordance with local regulations and practices.

# 6. Sizing

When sizing a system, take the following into account:

- The performance of the system must meet the highest possible demand in terms of both flow rate and pressure.
- The system must not be oversized. This is important in relation to installation and operating costs.

You can size the systems via Grundfos Product Center or this data booklet.

**Sizing in Grundfos Product Center (recommended)**

We recommend that you size your system in Grundfos Product Center, which is a selection program offered by Grundfos. For further information, see section Grundfos Product Center.

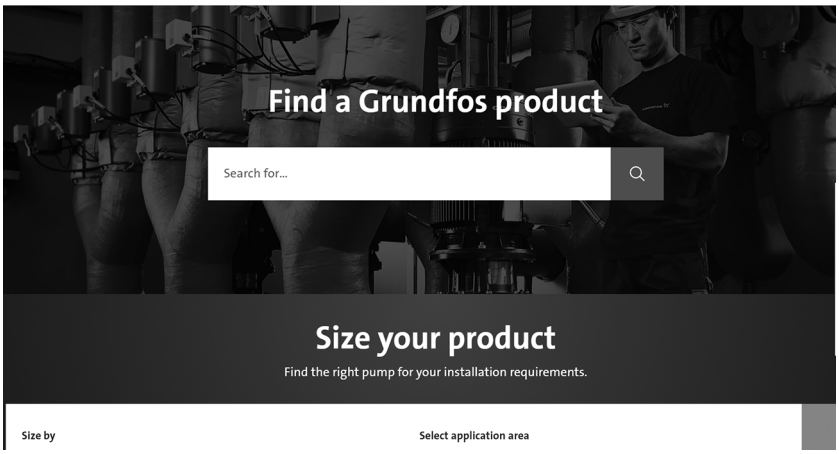


TM083490

*Sizing in Grundfos Product Center*

**Sizing via this data booklet**

There are seven steps:

1. maximum flow requirement
2. required outlet pressure
3. system layout
4. consumption profile and load profile
5. inlet pressure
6. system selection
7. accessories.

**Related information**

*13. Grundfos Product Center*

## Maximum flow requirement

The total consumption and the required maximum flow rate depend on the specific application. The maximum flow requirement can be calculated by means of the table below which is based on statistical data.

| Consumer | Unit | $Q_{year}$ | Consumption period | $Q_{day}$ | fd [6] | $Q(m)_{day}$ | ft [7] | Maximum flow rate |
|---|---|---|---|---|---|---|---|---|
| | | [$m^3$/year] | [days/year] | [$m^3$/day] | | [$m^3$/day] | | [$m^3$/h] |
| Residence building | Residence (2.5 persons) | 183 | 365 | 0.5 | 1.3 | 0.65 | 1.7 | 0.046 |
| Office building | Employee | 25 | 250 | 0.1 | 1.2 | 0.12 | 3.6 | 0.018 |
| Shopping centre | Employee | 25 | 300 | 0.08 | 1.2 | 0.1 | 4.3 | 0.018 |
| Supermarket | Employee | 80 | 300 | 0.27 | 1.5 | 0.4 | 3.0 | 0.05 |
| Hotel | Bed | 180 | 365 | 0.5 | 1.5 | 0.75 | 4.0 | 0.125 |
| Hospital | Bed | 300 | 365 | 0.8 | 1.2 | 1.0 | 3.0 | 0.12 |
| School | Pupil | 8 | 200 | 0.04 | 1.3 | 0.065 | 2.5 | 0.007 |

6) Maximum consumption factor, day

7) Maximum consumption factor, hour

### Example: Hotel with 540 beds

| | |
|---|---|
| Number of beds: | n |
| Total annual consumption: | $Q_{year} \times n$ |
| Consumption period: | d |
| Average consumption per day: | $(Q_{year} \times n) / d$ |
| Maximum consumption per day: | $Q_{(m)day} = f_d \times Q_{day}$ |
| Maximum flow requirement per hour: | $Q_{max}$ = maximum flow rate/hour × number of beds |

### Calculation

| | | |
|---|---|---|
| n | = | 540 beds |
| $Q_{year} \times n$ | = | 180 × 540 = 97,200 $m^3$/year |
| d | = | 365 days/year |
| $(Q_{year} \times n)/d$ | = | 97,200/365 = 266.3 $m^3$/day |
| $Q(m)_{day}$ | = | $f_d \times Q_{day}$ = 1.5 × 266.3 = 399.4 $m^3$/day |
| $Q_{max}$ | = | Maximum flow rate/hour x number of beds = 0.125 × 540 = 67.5 $m^3$/h |

## Required outlet pressure

The required outlet pressure of the system can be calculated with the following equation:

| | | |
|---|---|---|
| $p_{set}$ | = | $p_{tap(min)} + p_f + (h_{max}/10.2)$ |
| $p_{boost}$ | = | $p_{set} - p_{in(min)}$ |

### Key

| | | |
|---|---|---|
| $p_{set}$ | = | Required outlet pressure in bar |
| $p_{tap(min)}$ | = | Required minimum pressure at the highest tapping point in bar |
| $p_f$ | = | Total pipe friction loss in bar |
| $h_{max}$ | = | Height from system outlet port to highest tapping point in metres |
| $p_{in(min)}$ | = | Minimum inlet pressure in bar |
| $p_{boost}$ | = | Required boost in bar |

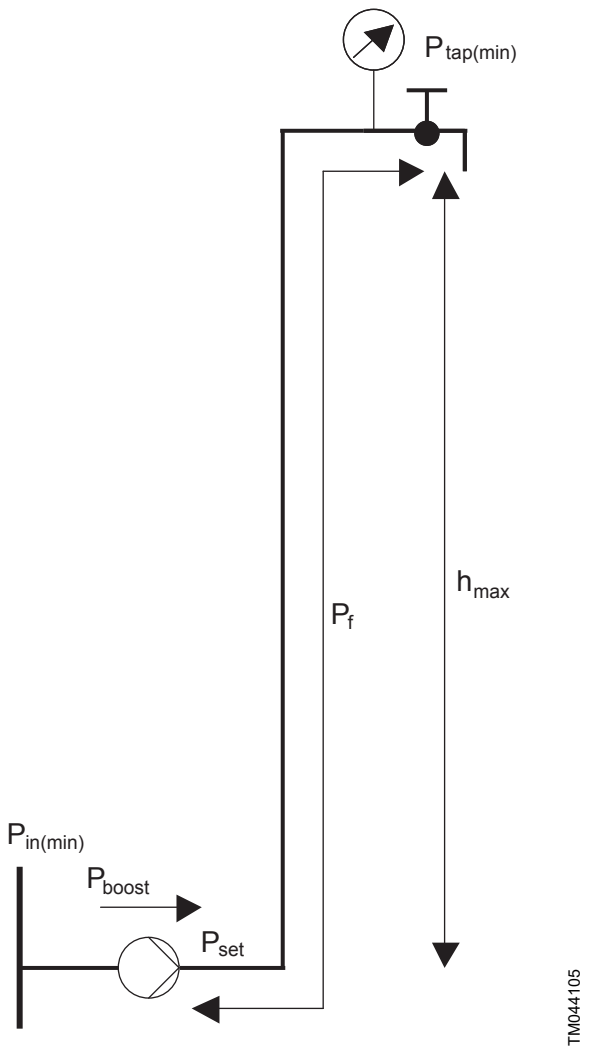


*Calculation of required outlet pressure*

**Example calculation**

| | | |
|---|---|---|
| $p_{tap(min)}$ | = | 2 bar |
| $p_f$ | = | 1.2 bar |
| $h_{max}$ | = | 41.5 m |
| $p_{in(min)}$ | = | 2 bar |
| $p_{set}$ | = | 2 + 1.2 + (41.5/10.2) = 7.3 bar |
| $p_{boost}$ | = | 7.3 - 2 = 5.3 bar |

## System layout

- Direct boosting

Example: The system is connected to water mains designed to distribute water from one place to another.

- Break tank

Example: The system is connected to a break tank installed before the system.

- Pressure boosting in zones

Example: A high-rise building or a hilly landscape where the water supply system is divided into zones.

- Roof tank

Example: The system distributes water to a roof tank on top of a high-rise building.

## Consumption profile and load profile

The consumption pattern of the installation can be illustrated as a 24-hour consumption profile and a load profile.

**24-hour consumption profile**

The 24-hour consumption profile is the relation between the time of the day and the flow rate.

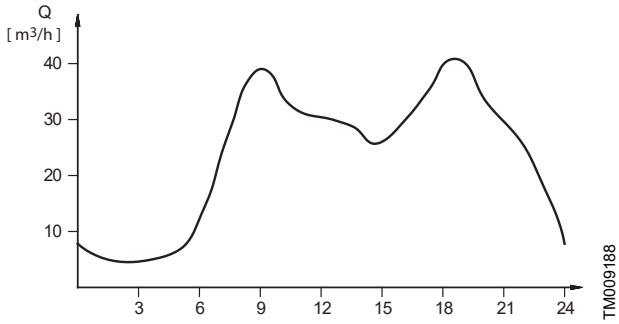


*Example of a 24-hour consumption profile*

If the consumption is variable and optimum comfort is required, use pumps with continuously variable speed.

**Load profile**

You can make the load profile when the 24-hour consumption profile is determined.

The load profile shows the percentage of the flow rate at which the system operates per day.

| Duty point | Flow | | Q | | Hours | |
|---|---|---|---|---|---|---|
| 1 | 100 | % | 67 | m³/h | 0.41 | h/day |
| 2 | 75 | % | 50.3 | m³/h | 0.82 | h/day |
| 3 | 55 | % | 36.9 | m³/h | 1.23 | h/day |
| 4 | 35 | % | 23.5 | m³/h | 2.45 | h/day |
| 5 | 12 | % | 8.04 | m³/h | 4.09 | h/day |

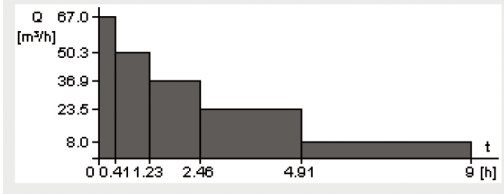


*Load profile*

Examples of typical 24-hour consumption profiles and their load profiles:

| | Water supply | Industry | Irrigation |
|---|---|---|---|
| 24-hour profile | 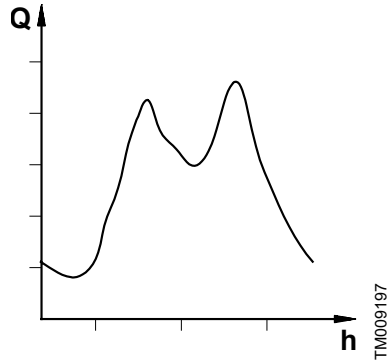  | 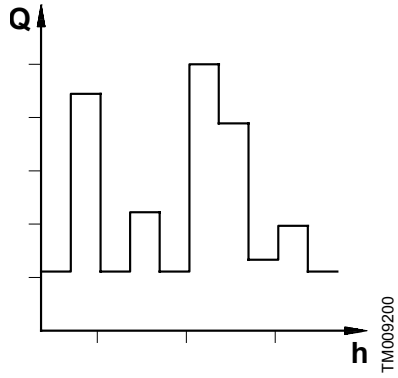  | 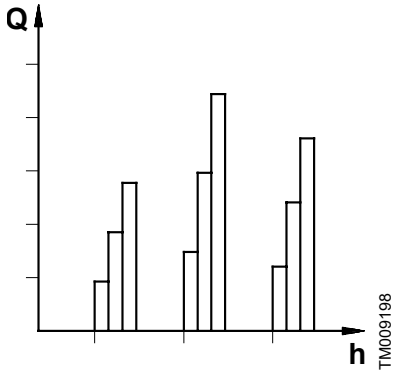  |
| | **Flow rate:** Highly variable<br>**Pressure:** Constant | **Flow rate:** Highly variable with sudden changes<br>**Pressure:** Constant | **Flow rate:** Constant and known<br>**Pressure:** Constant |
| Duty-time profile | 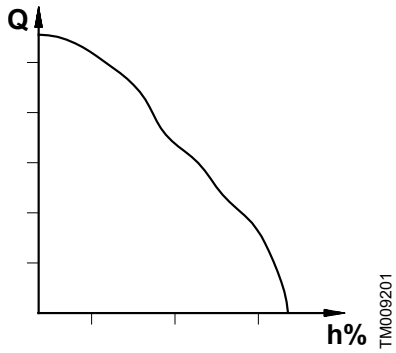  | 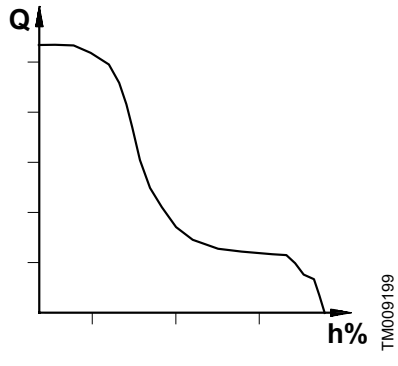  | 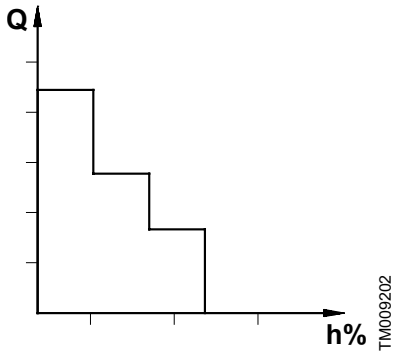  |
| | Consumption is highly variable.<br>Continuously variable speed control of the pumps is recommended. | Consumption is highly variable with sudden changes.<br>Continuously variable speed control of the pumps is recommended. | Variations in consumption are regular, and known.<br>Simple control is recommended. |

## Inlet pressure

If there is positive inlet pressure, take the inlet pressure into consideration to ensure safe and energy-optimal operation.

Ensure that the system maximum head and the inlet pressure do not exceed the PN rating for the system.

## System selection

Select the system on the basis of these factors:

- maximum flow requirement
- required outlet pressure
- load profile
- number of pumps required
- possible standby pumps.

## Accessories for dry-running protection

When you have selected the optimum system, consider whether you require any of the accessories mentioned below.

### Dry-running protection

Every system must be protected against dry running.

The inlet conditions determine the type of dry-running protection:

- If the system draws water from a tank or a well, select a level switch or an electrode relay for dry-running protection.
- If the system has inlet pressure, select a pressure sensor or a pressure switch for dry-running protection.

## Optional equipment and accessories

The system can be fitted with equipment for communication, dry-running protection, emergency operation, etc.

See sections Optional equipment and Accessories for more details.

**Related information**

*9. Optional equipment*

## Example: How to select a system

Example:

- A flow rate of 18 $m^3/h$ is required.
- A head of 45 m is required.

To select a Hydro Multi-E system, do the following:

1. Draw a vertical line from the required flow rate.
2. Draw a horizontal line from the required head.

The intersection of the two lines gives the number of pumps required for the system (two CRE, CRIE 10-6).

The pump type best meeting this specification can be determined using the y-axis, for instance, CRE, CRIE 10-6).

Select only systems with performance ranges within the hatched area in the example.

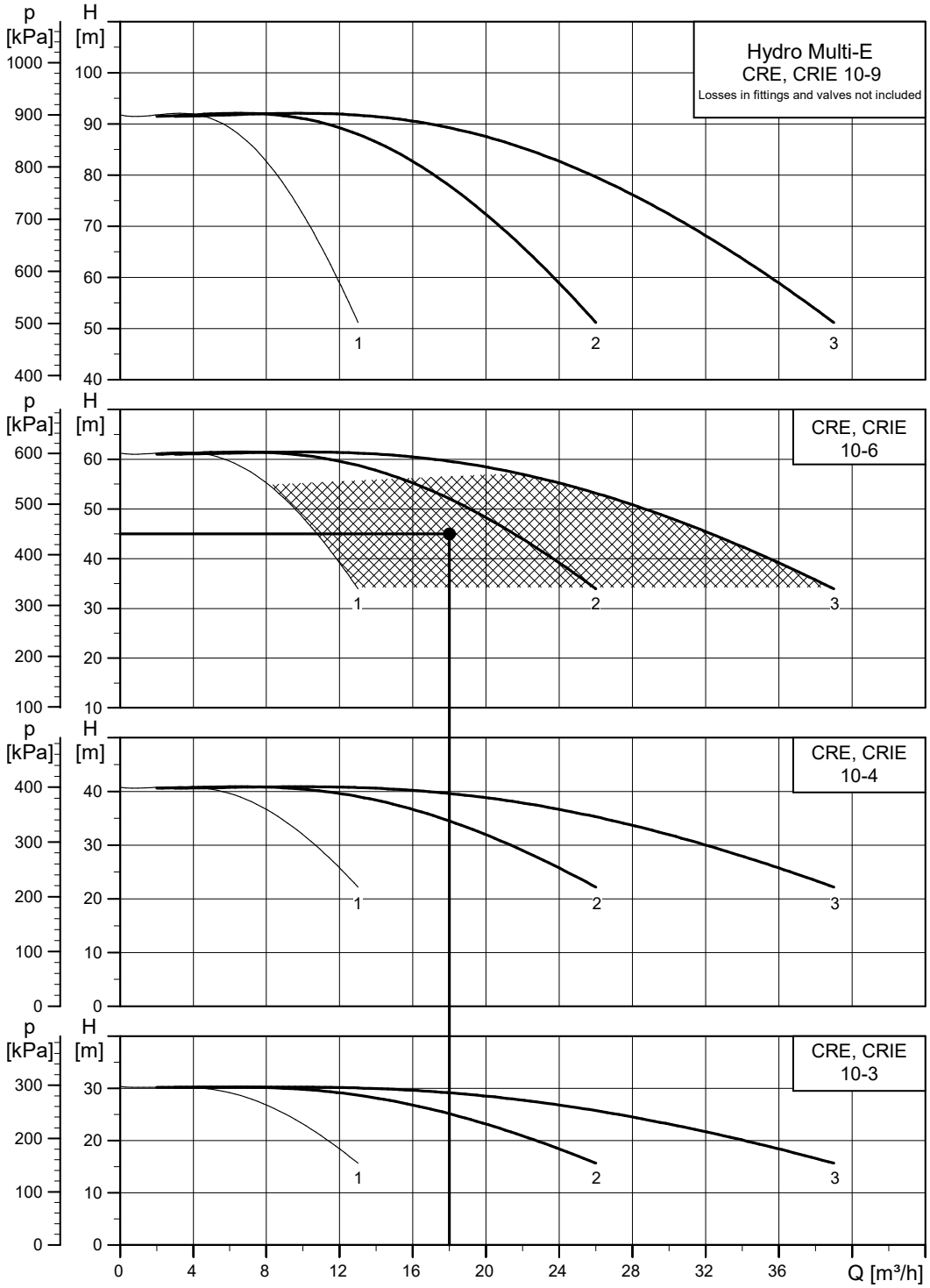


*Example of how to select a system*

# 7. Curve conditions

## How to read the performance curve

The guidelines below apply to the curves on the following pages:

- Measurements are made with airless water at a temperature of 20 °C (68 °F).
- The curves apply to a kinematic viscosity: $\upsilon$ = 1 $mm^2/s$ (1 cSt).
- The QH curves apply to fixed speeds of 2900 RPM at 50 Hz and 3480 RPM at 60 Hz.

In most cases, the actual speed deviates from the above-mentioned speeds. For actual curves, refer to Grundfos Product Center where the pump curves include the characteristics of the selected motor and therefore show curves at actual speeds. In Grundfos Product Center, you can also adjust the curves depending on the density and viscosity.

- The conversion between head H [m] ([ft]) and pressure P [kPa] ([psi]) applies to a specific weight equal to 8.3 lb/gal, water density of $\rho$ = 1000 $kg/m^3$.
- Losses in fittings and valves are not included.

## Understanding the curve charts

The x-axis showing the flow rate (Q) in $m^3/h$ is common to all the curves; the y-axis showing the head (H) in metres is adapted to the individual pump type.

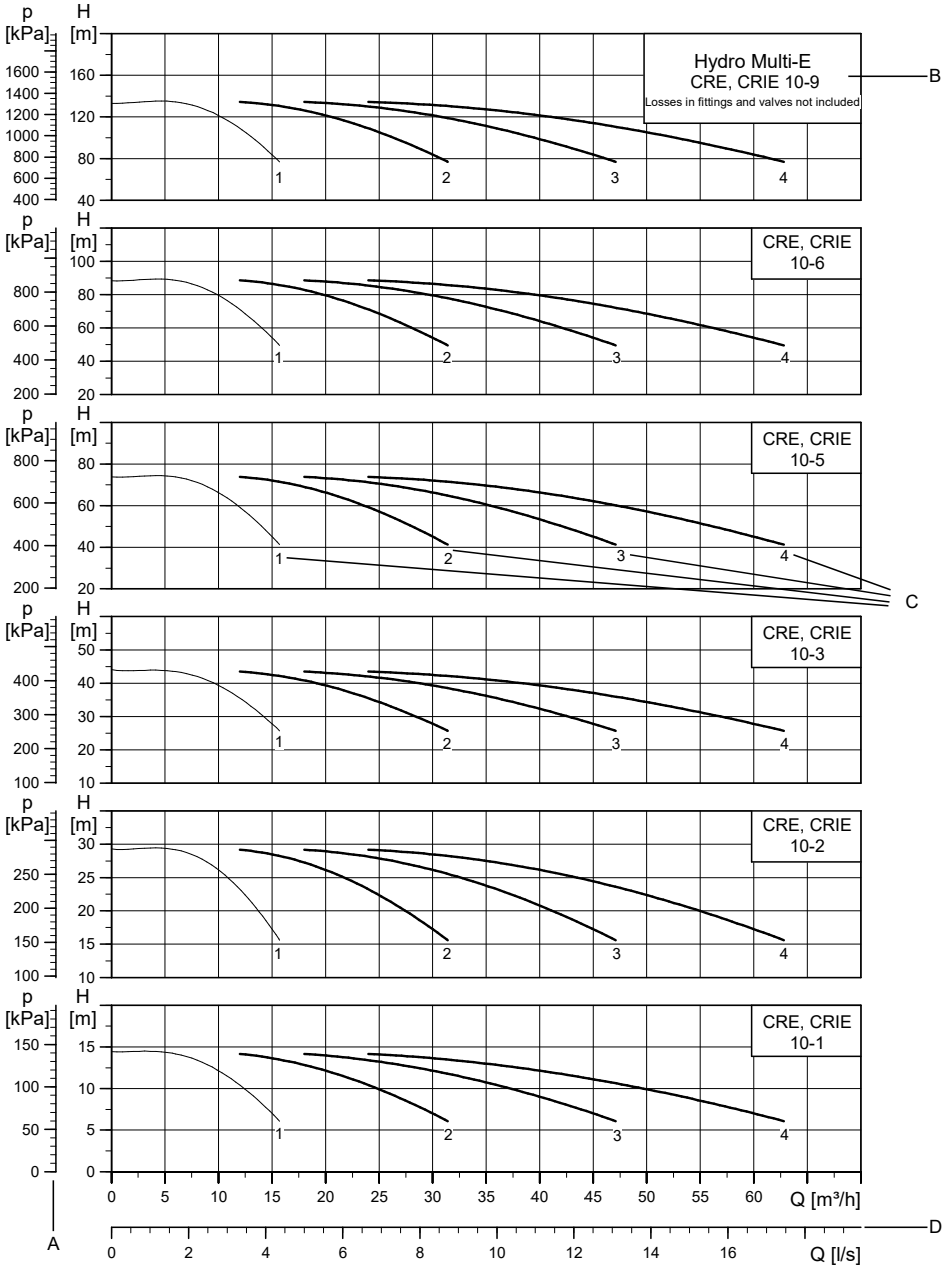


*Understanding the curve charts*

| Pos. | Description |
|---|---|
| A | The y-axis is adapted to the individual pump type. |
| B | Specification of system, pump type and standard to which the QH curves correspond. |
| C | Specification of system performance based on the number of pumps in operation:<br>1: one pump in operation<br>2: two pumps in operation<br>3: three pumps in operation<br>4: four pumps in operation. |
| D | The x-axis is common to all pump types. |

# 8. Curve charts and technical data

## Hydro Multi-E with CRE, CRIE 1

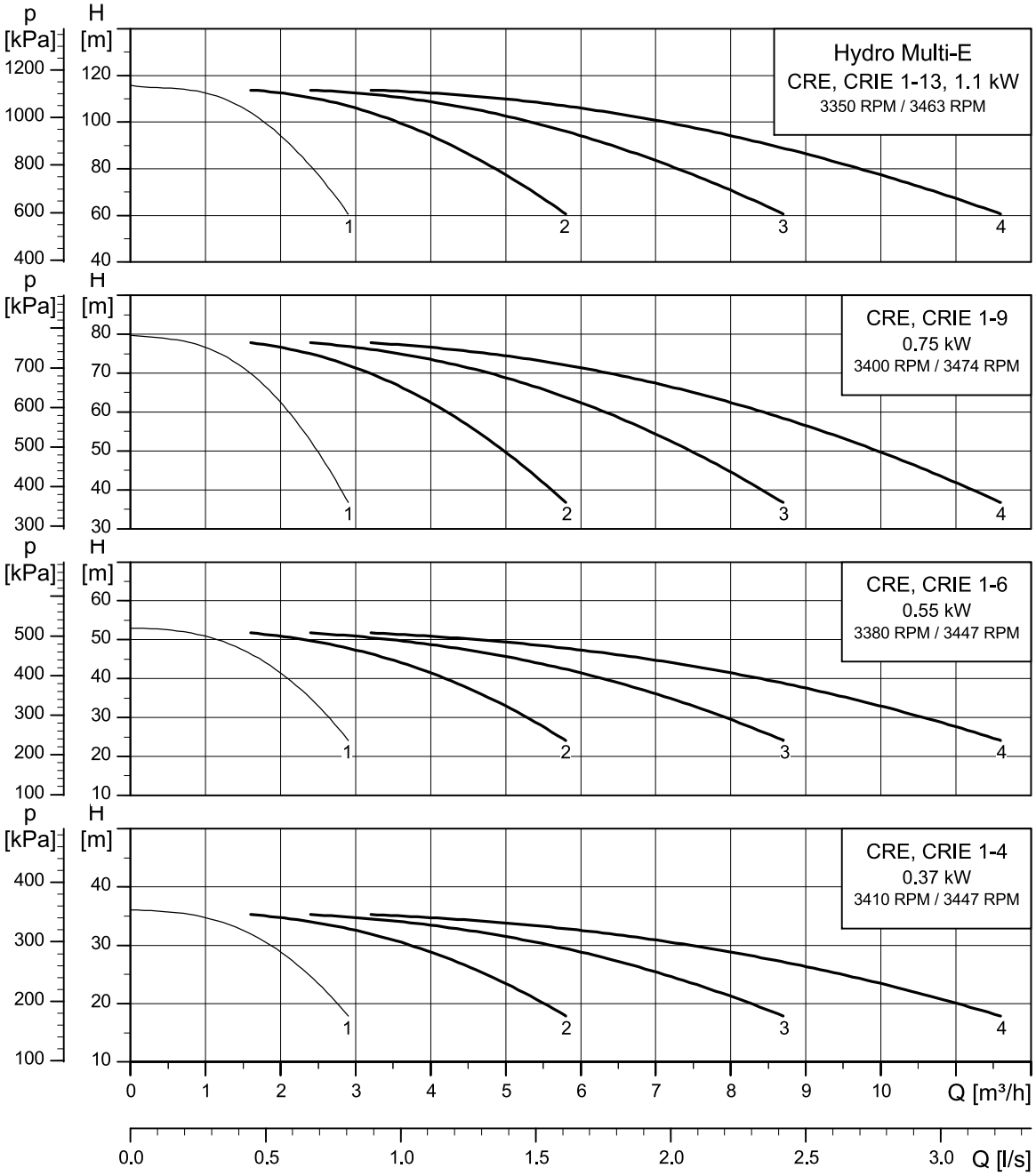

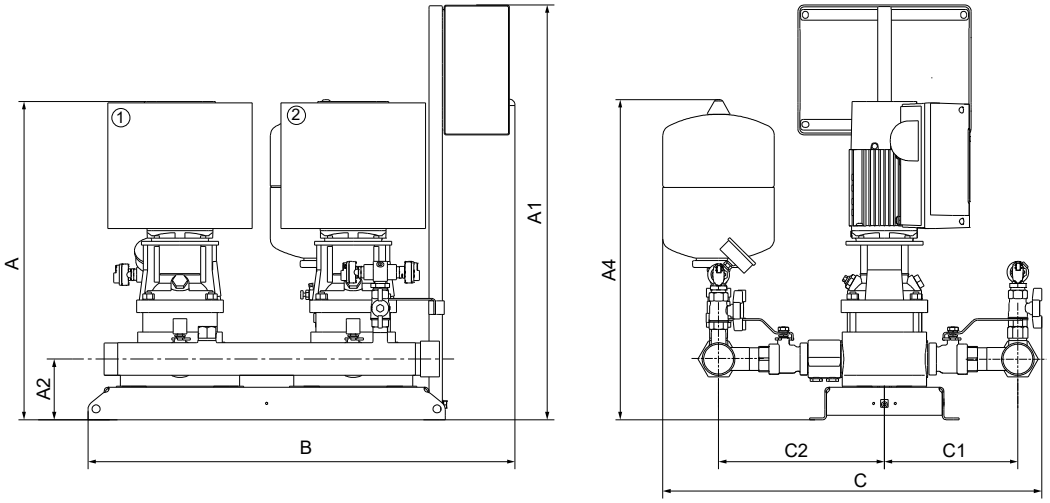
①
②
A
A2
B
A1
A4
C2
C1
C
TM059148

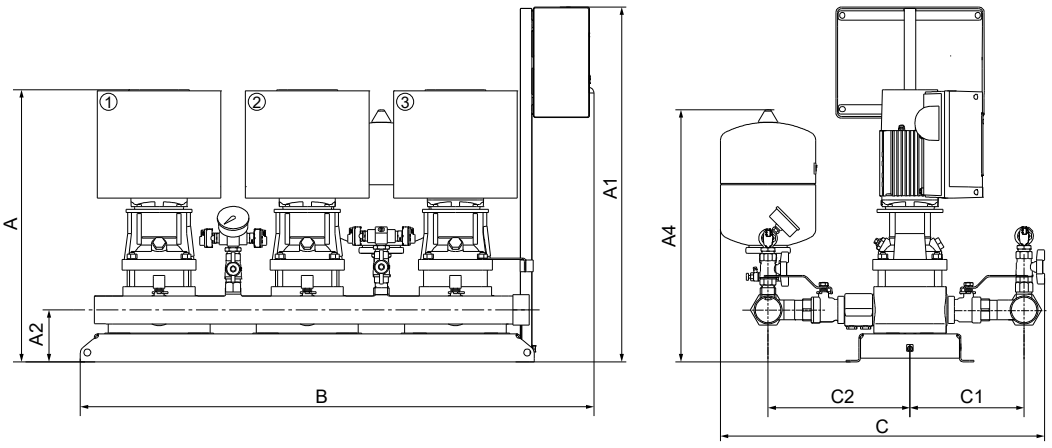
①
②
③
A
A2
B
A1
A4
C2
C1
C
TM059150

| Number of pumps | Pump type | Motor [kW] | Rated current [A] | Max. $I_O$ [A] | Supply voltage: Single-phase motor 3 × 400 V, PE, N | Supply voltage: Three-phase motor 3 × 400 V, PE | Rated speed [rpm] | Diaphragm tank [l] | Connections | A [mm] | A1 [mm] | A2 [mm] | A4 [mm] | B [mm] | C [mm] | C1 [mm] | C2 [mm] | Net weight [kg] | Shipping volume [$m^3$] |
|---|---|---|---|---|---|---|---|---|---|---|---|---|---|---|---|---|---|---|---|
| 2 | CRE, CRIE 1-4 | 0.37 | 2.3 | 2.3 | ● | - | 3410 | 8 | R 2 | 551 | 755 | 112 | 543 | 753 | 795 | 295 | 355 | 85 | 1.15 |
| | | | 2.1 | - | - | ● | 3447 | 8 | R 2 | 591 | 755 | 112 | 543 | 753 | 795 | 295 | 355 | 83 | 1.15 |
| 3 | | | 2.3 | 2.3 | ● | - | 3410 | 8 | R 2 | 551 | 755 | 112 | 543 | 1073 | 795 | 295 | 355 | 122 | 1.15 |
| | | | 3.15 | - | - | ● | 3447 | 8 | R 2 | 591 | 755 | 112 | 543 | 1073 | 795 | 295 | 355 | 127 | 1.15 |
| 4 | | | 4.6 | 4.6 | ● | - | 3410 | 8 | R 2 1/2 | 551 | 755 | 112 | 551 | 1393 | 799 | 295 | 355 | 160 | 1.15 |
| | | | 4.2 | - | - | ● | 3447 | 8 | R 2 1/2 | 591 | 755 | 112 | 551 | 1393 | 799 | 295 | 355 | 167 | 1.15 |
| 2 | CRE, CRIE 1-6 | 0.55 | 3.3 | 3.3 | ● | - | 3380 | 8 | R 2 | 587 | 755 | 112 | 543 | 753 | 795 | 295 | 355 | 86 | 1.15 |
| | | | 2.7 | | - | ● | 3447 | 8 | R 2 | 627 | 755 | 112 | 543 | 753 | 795 | 295 | 355 | 85 | 1.15 |
| 3 | | | 3.3 | 3.3 | ● | - | 3380 | 8 | R 2 | 587 | 755 | 112 | 543 | 1073 | 795 | 295 | 355 | 124 | 1.15 |
| | | | 4.05 | | - | ● | 3447 | 8 | R 2 | 627 | 755 | 112 | 543 | 1073 | 795 | 295 | 355 | 130 | 1.15 |
| 4 | | | 6.6 | 6.6 | ● | - | 3380 | 8 | R 2 1/2 | 587 | 755 | 112 | 551 | 1393 | 799 | 295 | 355 | 164 | 1.15 |
| | | | 5.4 | | - | ● | 3447 | 8 | R 2 1/2 | 627 | 755 | 112 | 551 | 1393 | 799 | 295 | 355 | 170 | 1.15 |
| 2 | CRE, CRIE 1-9 | 0.75 | 4.5 | 4.5 | ● | - | 3400 | 12 | R 2 | 647 | 755 | 112 | 523 | 753 | 832 | 295 | 355 | 91 | 1.15 |
| | | | 3.4 | | - | ● | 3474 | 12 | R 2 | 687 | 755 | 112 | 523 | 753 | 832 | 295 | 355 | 90 | 1.15 |
| 3 | | | 4.5 | 4.5 | ● | - | 3400 | 12 | R 2 | 647 | 755 | 112 | 523 | 1073 | 832 | 295 | 355 | 131 | 1.15 |
| | | | 5.1 | | - | ● | 3474 | 12 | R 2 | 687 | 755 | 112 | 523 | 1073 | 832 | 295 | 355 | 137 | 1.15 |
| 4 | | | 9 | 9 | ● | - | 3400 | 12 | R 2 1/2 | 647 | 755 | 112 | 531 | 1393 | 836 | 295 | 355 | 172 | 1.15 |
| | | | 6.8 | | - | ● | 3474 | 12 | R 2 1/2 | 687 | 755 | 112 | 531 | 1393 | 836 | 295 | 355 | 179 | 1.15 |
| 2 | CRE, CRIE 1-13 | 1.1 | 6.5 | 6.5 | ● | - | 3350 | 12 | R 2 | 719 | 755 | 112 | 523 | 753 | 832 | 295 | 355 | 96 | 1.15 |
| | | | 4.4 | | - | ● | 3463 | 12 | R 2 | 759 | 755 | 112 | 523 | 753 | 832 | 295 | 355 | 95 | 1.15 |
| 3 | | | 6.5 | 6.5 | ● | - | 3350 | 12 | R 2 | 719 | 755 | 112 | 523 | 1073 | 832 | 295 | 355 | 138 | 1.15 |
| | | | 6.6 | | - | ● | 3463 | 12 | R 2 | 759 | 755 | 112 | 523 | 1073 | 832 | 295 | 355 | 144 | 1.15 |
| 4 | | | 13 | 13 | ● | - | 3350 | 12 | R 2 1/2 | 719 | 755 | 112 | 531 | 1393 | 836 | 295 | 355 | 182 | 1.20 |
| | | | 8.8 | | - | ● | 3463 | 12 | R 2 1/2 | 759 | 755 | 112 | 531 | 1393 | 836 | 295 | 355 | 189 | 1.20 |

Motor [kW] is the power per pump.

Max. $I_O$ [A] applies to single-phase MGE motors. The value of the maximum $I_O$ [A] never exceeds the value of the rated current [A].

The material for manifolds is stainless steel.

## Hydro Multi-E with CRE, CRIE 3

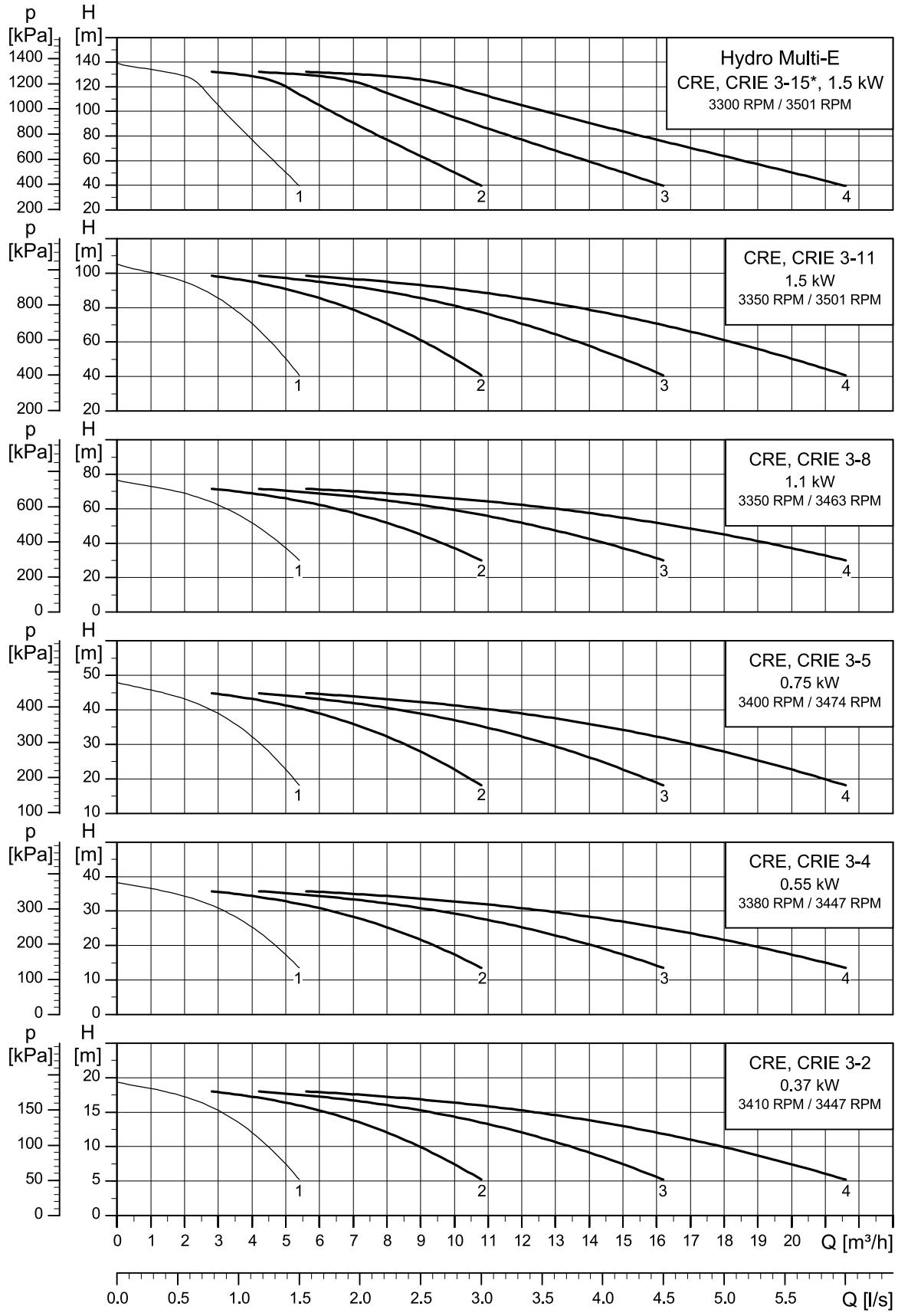


* Using an undersized MGE motor.

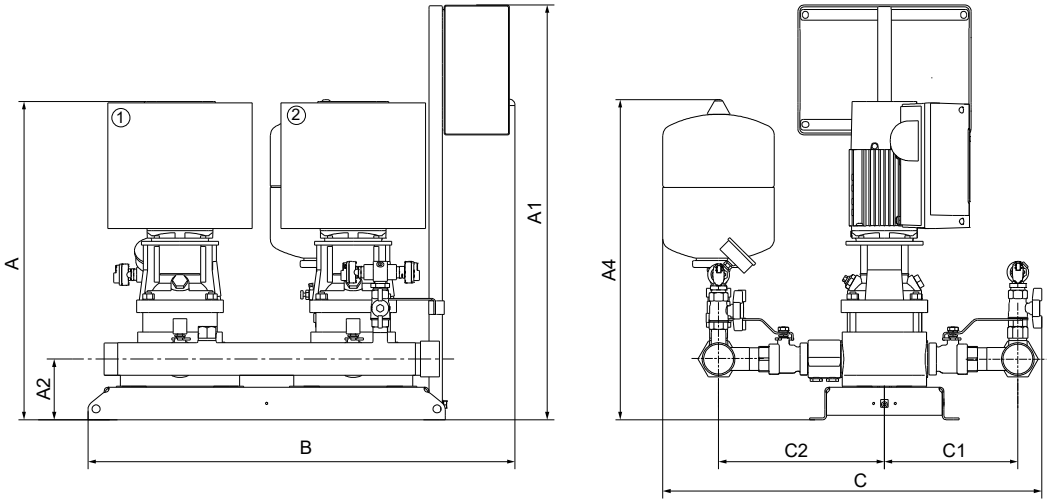


TM059148

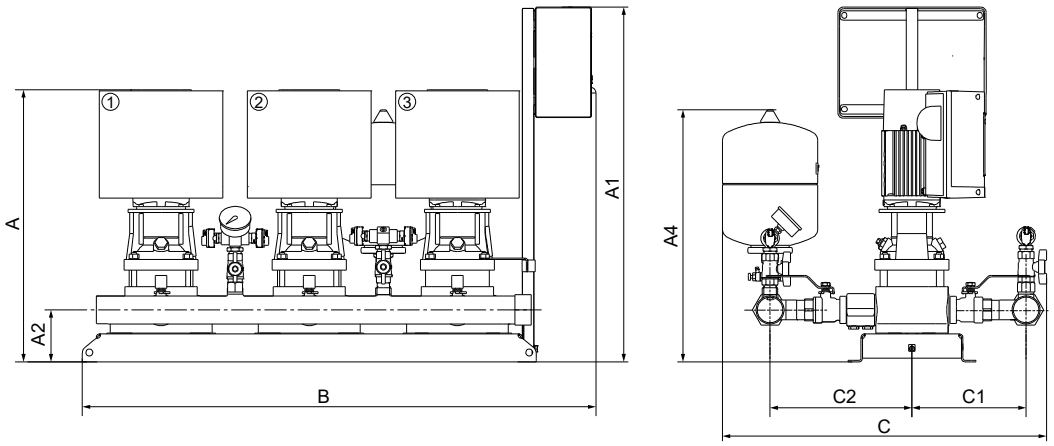


TM059150

| Number of pumps | Pump type | Motor [kW] | Rated current [A] | Max. $I_O$ [A] | Supply voltage: Single-phase motor 3 × 400 V, PE, N | Supply voltage: Three-phase motor 3 × 400 V, PE | Rated speed [rpm] | Diaphragm tank [l] | Connections | A [mm] | A1 [mm] | A2 [mm] | A4 [mm] | B [mm] | C [mm] | C1 [mm] | C2 [mm] | Net weight [kg] | Shipping volume [$m^3$] |
|---|---|---|---|---|---|---|---|---|---|---|---|---|---|---|---|---|---|---|---|
| 2 | CRE, CRIE 3-2 | 0.37 | 2.3 | 2.3 | ● | - | 3410 | 8 | R 2 | 533 | 755 | 112 | 543 | 753 | 795 | 295 | 355 | 83 | 1.15 |
| | | | 2.1 | | - | ● | 3447 | 8 | R 2 | 573 | 755 | 112 | 543 | 753 | 795 | 295 | 355 | 82 | 1.15 |
| 3 | | | 2.3 | 2.3 | ● | - | 3410 | 8 | R 2 | 533 | 755 | 112 | 543 | 1073 | 795 | 295 | 355 | 120 | 1.15 |
| | | | 3.15 | | - | ● | 3447 | 8 | R 2 | 573 | 755 | 112 | 543 | 1073 | 795 | 295 | 355 | 125 | 1.15 |
| 4 | | | 4.6 | 4.6 | ● | - | 3410 | 8 | R 2 1/2 | 533 | 755 | 112 | 551 | 1393 | 799 | 295 | 355 | 158 | 1.15 |
| | | | 4.2 | | - | ● | 3447 | 8 | R 2 1/2 | 573 | 755 | 112 | 551 | 1393 | 799 | 295 | 355 | 165 | 1.15 |
| 2 | CRE, CRIE 3-4 | 0.55 | 3.3 | 3.3 | ● | - | 3380 | 8 | R 2 | 551 | 755 | 112 | 543 | 753 | 795 | 295 | 355 | 85 | 1.15 |
| | | | 2.7 | | - | ● | 3447 | 8 | R 2 | 591 | 755 | 112 | 543 | 753 | 795 | 295 | 355 | 83 | 1.15 |
| 3 | | | 3.3 | 3.3 | ● | - | 3380 | 8 | R 2 | 551 | 755 | 112 | 543 | 1073 | 795 | 295 | 355 | 122 | 1.15 |
| | | | 4.05 | | - | ● | 3447 | 8 | R 2 | 591 | 755 | 112 | 543 | 1073 | 795 | 295 | 355 | 127 | 1.15 |
| 4 | | | 6.6 | 6.6 | ● | - | 3380 | 8 | R 2 1/2 | 551 | 755 | 112 | 551 | 1393 | 799 | 295 | 355 | 160 | 1.15 |
| | | | 5.4 | | - | ● | 3447 | 8 | R 2 1/2 | 591 | 755 | 112 | 551 | 1393 | 799 | 295 | 355 | 167 | 1.15 |
| 2 | CRE, CRIE 3-5 | 0.75 | 4.5 | 4.5 | ● | - | 3400 | 8 | R 2 | 575 | 755 | 112 | 543 | 753 | 795 | 295 | 355 | 87 | 1.15 |
| | | | 3.4 | | - | ● | 3474 | 8 | R 2 | 615 | 755 | 112 | 543 | 753 | 795 | 295 | 355 | 85 | 1.15 |
| 3 | | | 4.5 | 4.5 | ● | - | 3400 | 8 | R 2 | 575 | 755 | 112 | 543 | 1073 | 795 | 295 | 355 | 125 | 1.15 |
| | | | 5.1 | | - | ● | 3474 | 8 | R 2 | 615 | 755 | 112 | 543 | 1073 | 795 | 295 | 355 | 130 | 1.15 |
| 4 | | | 9 | 9 | ● | - | 3400 | 8 | R 2 1/2 | 575 | 755 | 112 | 551 | 1393 | 799 | 295 | 355 | 165 | 1.15 |
| | | | 6.8 | | - | ● | 3474 | 8 | R 2 1/2 | 615 | 755 | 112 | 551 | 1393 | 799 | 295 | 355 | 172 | 1.15 |
| 2 | CRE, CRIE 3-8 | 1.1 | 6.5 | 6.5 | ● | - | 3350 | 8 | R 2 | 629 | 755 | 112 | 543 | 753 | 795 | 295 | 355 | 91 | 1.15 |
| | | | 4.4 | | - | ● | 3463 | 8 | R 2 | 669 | 755 | 112 | 543 | 753 | 795 | 295 | 355 | 90 | 1.15 |
| 3 | | | 6.5 | 6.5 | ● | - | 3350 | 8 | R 2 | 629 | 755 | 112 | 543 | 1073 | 795 | 295 | 355 | 131 | 1.15 |
| | | | 6.6 | | - | ● | 3463 | 8 | R 2 | 669 | 755 | 112 | 543 | 1073 | 795 | 295 | 355 | 137 | 1.15 |
| 4 | | | 13 | 13 | ● | - | 3350 | 8 | R 2 1/2 | 629 | 755 | 112 | 551 | 1393 | 799 | 295 | 355 | 173 | 1.15 |
| | | | 8.8 | | - | ● | 3463 | 8 | R 2 1/2 | 669 | 755 | 112 | 551 | 1393 | 799 | 295 | 355 | 180 | 1.15 |
| 2 | CRE, CRIE 3-11 | 1.5 | 8.7 | 8.7 | ● | - | 3350 | 12 | R 2 | 719 | 755 | 112 | 523 | 753 | 832 | 295 | 355 | 101 | 1.15 |
| | | | 5.8 | | - | ● | 3501 | 12 | R 2 | 759 | 755 | 112 | 523 | 753 | 832 | 295 | 355 | 99 | 1.15 |
| 3 | | | 8.7 | 8.7 | ● | - | 3350 | 12 | R 2 | 719 | 755 | 112 | 523 | 1073 | 832 | 295 | 355 | 145 | 1.15 |
| | | | 8.7 | | - | ● | 3501 | 12 | R 2 | 759 | 755 | 112 | 523 | 1073 | 832 | 295 | 355 | 150 | 1.15 |
| 4 | | | 17.4 | 17.4 | ● | - | 3350 | 12 | R 2 1/2 | 719 | 755 | 112 | 531 | 1393 | 836 | 295 | 355 | 191 | 1.20 |
| | | | 11.6 | | - | ● | 3501 | 12 | R 2 1/2 | 759 | 755 | 112 | 531 | 1393 | 836 | 295 | 355 | 198 | 1.20 |
| 2 | CRE, CRIE 3-15 [8] | 1.5 | 8.7 | 8.7 | ● | - | 3300 | 12 | R 2 | 791 | 755 | 112 | 523 | 753 | 832 | 295 | 355 | 104 | 1.15 |
| | | | 5.8 | - | - | ● | 3501 | 12 | R 2 | 831 | 755 | 112 | 523 | 753 | 832 | 295 | 355 | 108 | 1.15 |
| 3 | | | 8.7 | 8.7 | ● | - | 3300 | 12 | R 2 | 791 | 755 | 112 | 523 | 1073 | 832 | 295 | 355 | 151 | 1.15 |
| | | | 8.7 | - | - | ● | 3501 | 12 | R 2 | 831 | 755 | 112 | 523 | 1073 | 832 | 295 | 355 | 164 | 1.15 |
| 4 | | | 17.4 | 17.4 | ● | - | 3300 | 12 | R 2 1/2 | 791 | 755 | 112 | 531 | 1393 | 836 | 295 | 355 | 198 | 1.30 |
| | | | 11.6 | - | - | ● | 3501 | 12 | R 2 1/2 | 831 | 755 | 112 | 531 | 1393 | 836 | 295 | 355 | 216 | 1.30 |

[8] Using an undersized MGE motor.

Motor [kW] is the power per pump.

Max. $I_O$ [A] applies to single-phase MGE motors. The value of the maximum $I_O$ [A] never exceeds the value of the rated current [A].

The material for manifolds is stainless steel.

## Hydro Multi-E with CRE, CRIE 5

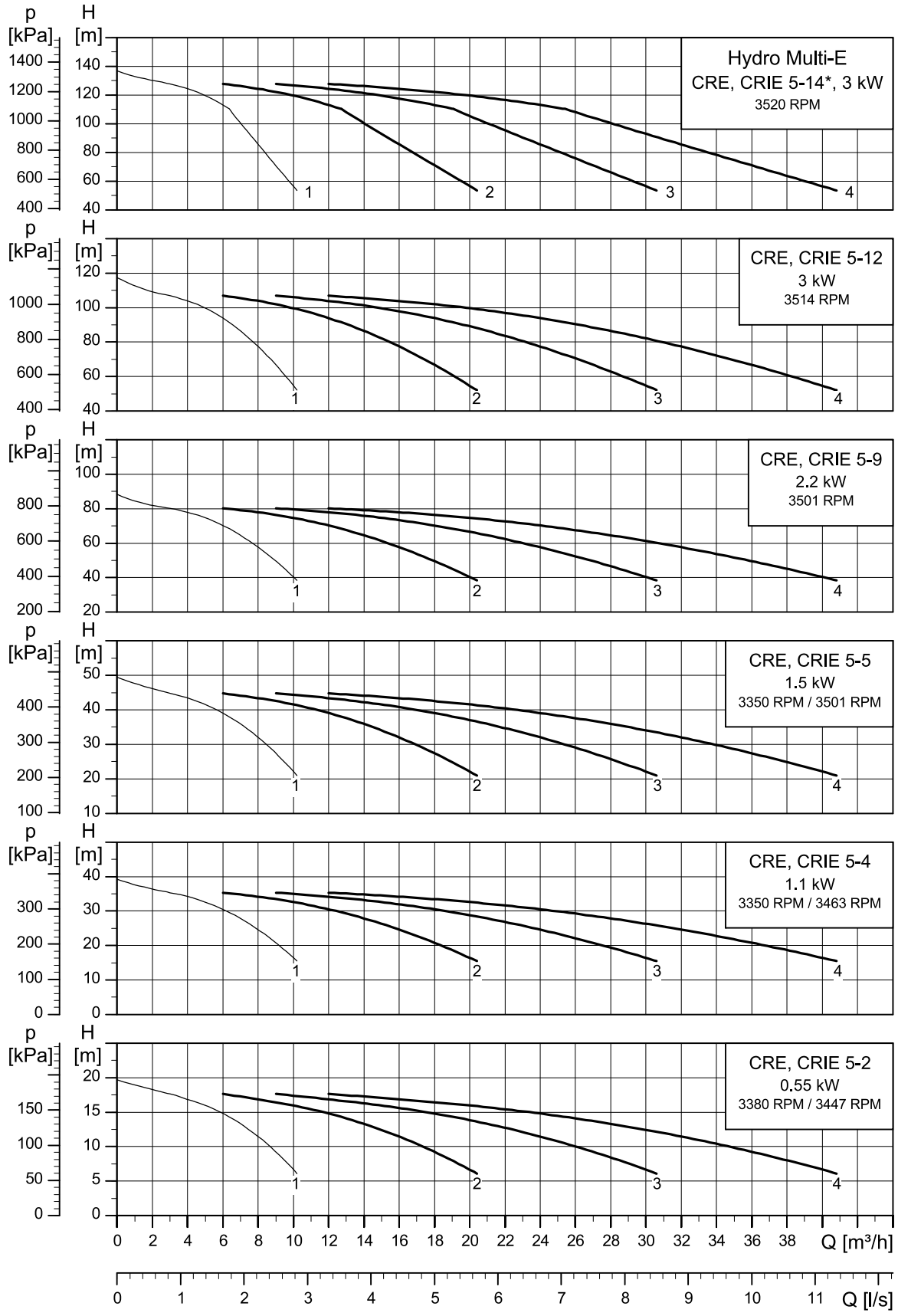


* Using an undersized MGE motor.

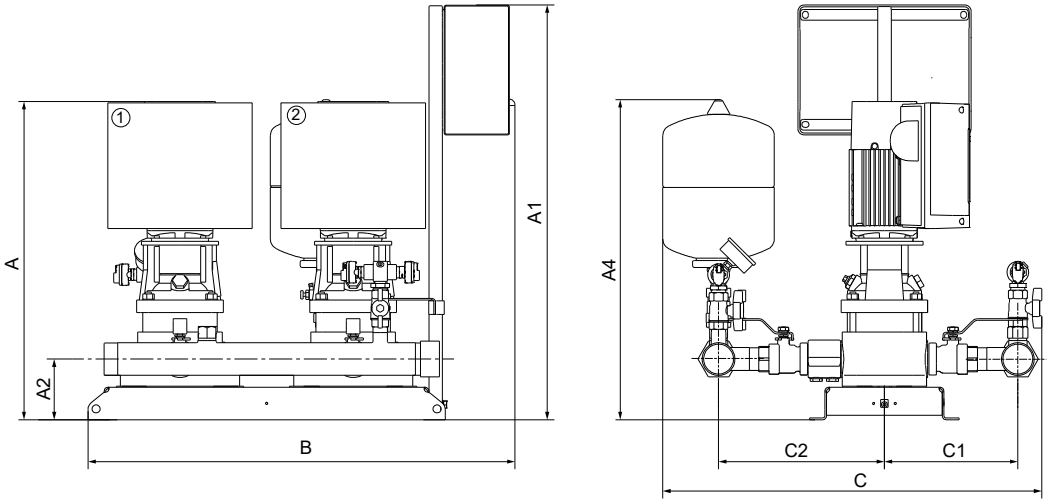
①
②
A
A2
B
A1
A4
C2
C1
C
TM059148

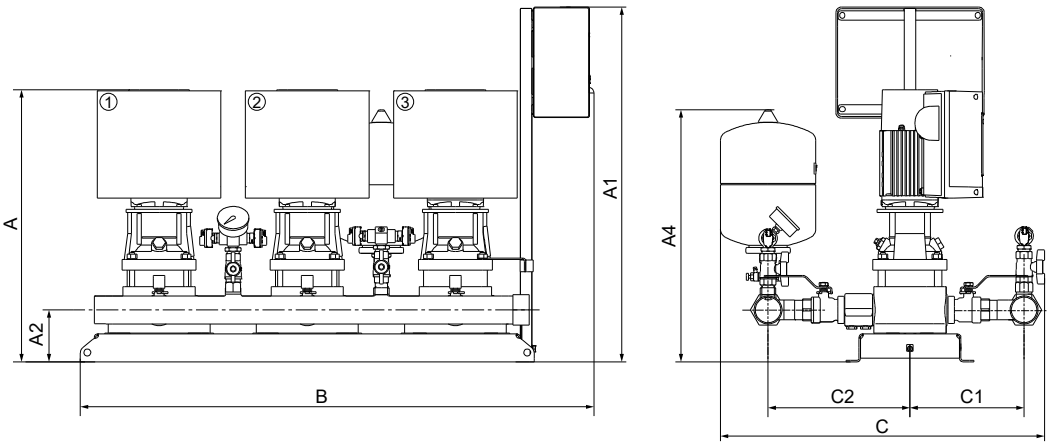
①
②
③
A
A2
B
A1
A4
C2
C1
C
TM059150

| Number of pumps | Pump type | Motor [kW] | Rated current [A] | Max. $I_O$ [A] | Supply voltage: Single-phase motor 3 × 400 V, PE, N | Supply voltage: Three-phase motor 3 × 400 V, PE | Rated speed [rpm] | Diaphragm tank [l] | Connections | A [mm] | A1 [mm] | A2 [mm] | A4 [mm] | B [mm] | C [mm] | C1 [mm] | C2 [mm] | Net weight [kg] | Shipping volume [$m^3$] |
|---|---|---|---|---|---|---|---|---|---|---|---|---|---|---|---|---|---|---|---|
| 2 | CRE, CRIE 5-2 | 0.55 | 3.3 | 3.3 | ● | - | 3380 | 8 | R 2 | 533 | 755 | 112 | 543 | 753 | 795 | 295 | 355 | 84 | 1.15 |
| | | | 2.7 | | - | ● | 3447 | 8 | R 2 | 573 | 755 | 112 | 543 | 753 | 795 | 295 | 355 | 82 | 1.15 |
| 3 | | | 3.3 | 3.3 | ● | - | 3380 | 8 | R 2 | 533 | 755 | 112 | 543 | 1073 | 795 | 295 | 355 | 120 | 1.15 |
| | | | 4.05 | | - | ● | 3447 | 8 | R 2 | 573 | 755 | 112 | 543 | 1073 | 795 | 295 | 355 | 125 | 1.15 |
| 4 | | | 6.6 | 6.6 | ● | - | 3380 | 8 | R 2 1/2 | 533 | 755 | 112 | 551 | 1393 | 799 | 295 | 355 | 158 | 1.15 |
| | | | 5.4 | | - | ● | 3447 | 8 | R 2 1/2 | 573 | 755 | 112 | 551 | 1393 | 799 | 295 | 355 | 165 | 1.15 |
| 2 | CRE, CRIE 5-4 | 1.1 | 6.5 | 6.5 | ● | - | 3350 | 8 | R 2 | 593 | 755 | 112 | 543 | 753 | 795 | 295 | 355 | 89 | 1.15 |
| | | | 4.4 | | - | ● | 3463 | 8 | R 2 | 633 | 755 | 112 | 543 | 753 | 795 | 295 | 355 | 88 | 1.15 |
| 3 | | | 6.5 | 6.5 | ● | - | 3350 | 8 | R 2 | 593 | 755 | 112 | 543 | 1073 | 795 | 295 | 355 | 128 | 1.15 |
| | | | 6.6 | | - | ● | 3463 | 8 | R 2 | 633 | 755 | 112 | 543 | 1073 | 795 | 295 | 355 | 134 | 1.15 |
| 4 | | | 13 | 13 | ● | - | 3350 | 8 | R 2 1/2 | 593 | 755 | 112 | 551 | 1393 | 799 | 295 | 355 | 169 | 1.15 |
| | | | 8.8 | | - | ● | 3463 | 8 | R 2 1/2 | 633 | 755 | 112 | 551 | 1393 | 799 | 295 | 355 | 176 | 1.15 |
| 2 | CRE, CRIE 5-5 | 1.5 | 8.7 | 8.7 | ● | - | 3350 | 8 | R 2 | 656 | 755 | 112 | 543 | 753 | 795 | 295 | 355 | 96 | 1.15 |
| | | | 5.8 | | - | ● | 3501 | 8 | R 2 | 696 | 755 | 112 | 543 | 753 | 795 | 295 | 355 | 95 | 1.15 |
| 3 | | | 8.7 | 8.7 | ● | - | 3350 | 8 | R 2 | 656 | 755 | 112 | 543 | 1073 | 795 | 295 | 355 | 139 | 1.15 |
| | | | 8.7 | | - | ● | 3501 | 8 | R 2 | 696 | 755 | 112 | 543 | 1073 | 795 | 295 | 355 | 144 | 1.15 |
| 4 | | | 17.4 | 17.4 | ● | - | 3350 | 8 | R 2 1/2 | 656 | 755 | 112 | 551 | 1393 | 799 | 295 | 355 | 183 | 1.15 |
| | | | 11.6 | | - | ● | 3501 | 8 | R 2 1/2 | 696 | 755 | 112 | 551 | 1393 | 799 | 295 | 355 | 190 | 1.15 |
| 2 | CRE, CRIE 5-9 | 2.2 | 8.3 | - | - | ● | 3501 | 12 | R 2 | 804 | 755 | 112 | 523 | 753 | 832 | 295 | 355 | 108 | 1.15 |
| 3 | | | 12.5 | - | - | ● | 3501 | 12 | R 2 | 804 | 755 | 112 | 523 | 1073 | 832 | 295 | 355 | 163 | 1.15 |
| 4 | | | 16.6 | - | - | ● | 3501 | 12 | R 2 1/2 | 804 | 935 | 112 | 531 | 1483 | 836 | 295 | 355 | 214 | 1.26 |
| 2 | CRE, CRIE 5-12 | 3 | 11.6 | - | - | ● | 3514 | 12 | R 2 | 950 | 755 | 112 | 523 | 753 | 832 | 295 | 355 | 162 | 1.15 |
| 3 | | | 17.4 | - | - | ● | 3514 | 12 | R 2 | 950 | 755 | 112 | 523 | 1073 | 832 | 295 | 355 | 245 | 1.15 |
| 4 | | | 23.2 | - | - | ● | 3514 | 12 | R 2 1/2 | 950 | 935 | 112 | 531 | 1483 | 836 | 295 | 355 | 324 | 1.47 |
| 2 | CRE, CRIE 5-14 [9] | 3 | 11.6 | - | - | ● | 3520 | 12 | R 2 | 1004 | 755 | 112 | 523 | 753 | 832 | 295 | 355 | 165 | 1.21 |
| 3 | | | 17.4 | - | - | ● | 3520 | 12 | R 2 | 1004 | 755 | 112 | 523 | 1073 | 832 | 295 | 355 | 248 | 1.21 |
| 4 | | | 23.2 | - | - | ● | 3520 | 12 | R 2 1/2 | 1004 | 935 | 112 | 531 | 1483 | 836 | 295 | 355 | 329 | 1.54 |

[9] Using an undersized MGE motor.

Motor [kW] is the power per pump.

Max. $I_O$ [A] applies to single-phase MGE motors. The value of the maximum $I_O$ [A] never exceeds the value of the rated current [A].

The material for manifolds is stainless steel.

## Hydro Multi-E with CRE, CRIE 10

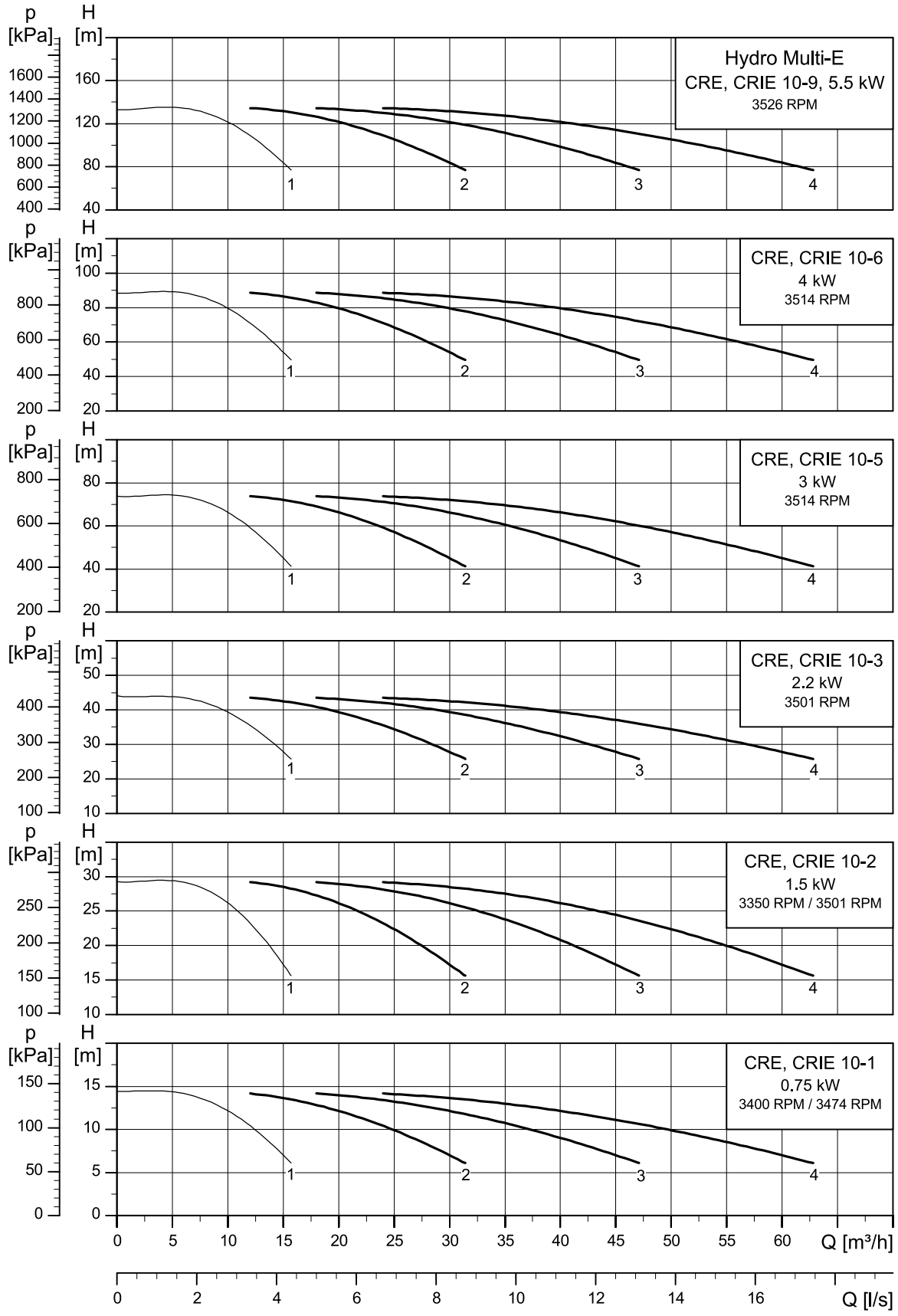

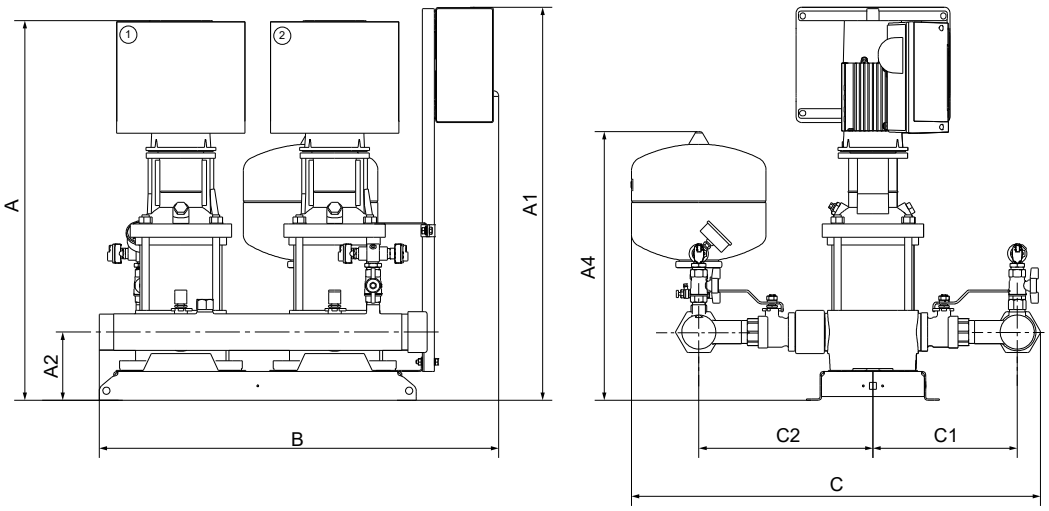
1
2
A
A1
A2
B
A4
C2
C1
C
TM084451

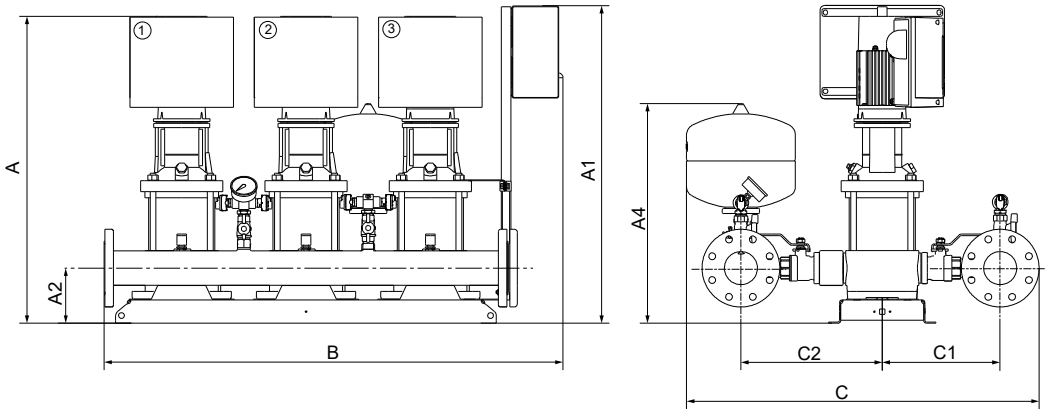
1
2
3
A
A1
A2
B
A4
C2
C1
C
TM084450

| Number of pumps | Pump type | Motor [kW] | Rated current [A] | Max. $I_O$ [A] | Supply voltage: Single-phase motor 3 × 400 V, PE, N | Supply voltage: Three-phase motor 3 × 400 V, PE | Rated speed [rpm] | Diaphragm tank [l] | Connections | A [mm] | A1 [mm] | A2 [mm] | A4 [mm] | B [mm] | C [mm] | C1 [mm] | C2 [mm] | Net weight [kg] | Shipping volume [$m^3$] |
|---|---|---|---|---|---|---|---|---|---|---|---|---|---|---|---|---|---|---|---|
| 2 | CRE, CRIE 10-1 | 0.75 | 4.5 | 4.5 | ● | - | 3400 | 8 | R 2 1/2 | 633 | 815 | 142 | 581 | 783 | 948 | 370 | 430 | 120 | 1.15 |
| | | | 3.4 | | - | ● | 3474 | 8 | R 2 1/2 | 673 | 815 | 142 | 581 | 783 | 948 | 370 | 430 | 119 | 1.15 |
| 3 | | | 4.5 | 4.5 | ● | - | 3400 | 8 | DN 80 | 633 | 815 | 142 | 588 | 1133 | 1003 | 370 | 430 | 195 | 1.20 |
| | | | 5.1 | | - | ● | 3474 | 8 | DN 80 | 673 | 815 | 142 | 588 | 1133 | 1003 | 370 | 430 | 201 | 1.20 |
| 4 | | | 9 | 9 | ● | - | 3400 | 8 | DN 80 | 633 | 815 | 142 | 588 | 1423 | 1003 | 370 | 430 | 241 | 1.48 |
| | | | 6.8 | | - | ● | 3474 | 8 | DN 80 | 673 | 815 | 142 | 588 | 1423 | 1003 | 370 | 430 | 250 | 1.48 |
| 2 | CRE, CRIE 10-2 | 1.5 | 8.7 | 8.7 | ● | - | 3350 | 8 | R 2 1/2 | 669 | 815 | 142 | 581 | 783 | 948 | 370 | 430 | 129 | 1.15 |
| | | | 5.8 | | - | ● | 3501 | 8 | R 2 1/2 | 709 | 815 | 142 | 581 | 783 | 948 | 370 | 430 | 126 | 1.15 |
| 3 | | | 8.7 | 8.7 | ● | - | 3350 | 8 | DN 80 | 669 | 815 | 142 | 588 | 1133 | 1003 | 370 | 430 | 208 | 1.20 |
| | | | 8.7 | | - | ● | 3501 | 8 | DN 80 | 709 | 815 | 142 | 588 | 1133 | 1003 | 370 | 430 | 212 | 1.20 |
| 4 | | | 17.4 | 17.4 | ● | - | 3350 | 8 | DN 80 | 669 | 815 | 142 | 588 | 1423 | 1003 | 370 | 430 | 266 | 1.48 |
| | | | 11.6 | | - | ● | 3501 | 8 | DN 80 | 709 | 815 | 142 | 588 | 1423 | 1003 | 370 | 430 | 270 | 1.48 |
| 2 | CRE, CRIE 10-3 | 2.2 | 8.3 | - | - | ● | 3501 | 8 | R 2 1/2 | 739 | 815 | 142 | 581 | 783 | 948 | 370 | 430 | 133 | 1.15 |
| 3 | | | 12.5 | - | - | ● | 3501 | 8 | DN 80 | 739 | 815 | 142 | 588 | 1133 | 1003 | 370 | 430 | 222 | 1.20 |
| 4 | | | 16.6 | - | - | ● | 3501 | 8 | DN 80 | 739 | 995 | 142 | 588 | 1513 | 1003 | 370 | 430 | 284 | 1.48 |
| 2 | CRE, CRIE 10-5 | 3 | 11.6 | - | - | ● | 3514 | 12 | R 2 1/2 | 864 | 815 | 142 | 561 | 783 | 985 | 370 | 430 | 190 | 1.15 |
| 3 | | | 17.4 | - | - | ● | 3514 | 12 | DN 80 | 864 | 815 | 142 | 568 | 1133 | 1040 | 370 | 430 | 308 | 1.36 |
| 4 | | | 23.2 | - | - | ● | 3514 | 12 | DN 80 | 864 | 995 | 142 | 568 | 1513 | 1040 | 370 | 430 | 399 | 1.67 |
| 2 | CRE, CRIE 10-6 | 4 | 15.2 | - | - | ● | 3514 | 12 | R 2 1/2 | 894 | 815 | 142 | 561 | 783 | 985 | 370 | 430 | 180 | 1.15 |
| 3 | | | 22.8 | - | - | ● | 3514 | 12 | DN 80 | 894 | 815 | 142 | 568 | 1133 | 1040 | 370 | 430 | 282 | 1.40 |
| 4 | | | 30.4 | - | - | ● | 3514 | 12 | DN 80 | 894 | 995 | 142 | 568 | 1513 | 1040 | 370 | 430 | 356 | 1.73 |
| 2 | CRE, CRIE 10-9 | 5.5 | 20.6 | - | - | ● | 3526 | 12 | R 2 1/2 | 1047 | 815 | 142 | 561 | 783 | 985 | 370 | 430 | 260 | 1.10 |
| 3 | | | 30.9 | - | - | ● | 3526 | 12 | DN 80 | 1047 | 815 | 142 | 568 | 1133 | 1040 | 370 | 430 | 413 | 1.61 |
| 4 | | | 41.2 | - | - | ● | 3526 | 12 | DN 80 | 1047 | 995 | 142 | 568 | 1513 | 1040 | 370 | 430 | 538 | 1.99 |

Motor [kW] is the power per pump.

Max. $I_O$ [A] applies to single-phase MGE motors. The value of the maximum $I_O$ [A] never exceeds the value of the rated current [A].

The material for manifolds is stainless steel.

## Hydro Multi-E with CRE, CRIE 15

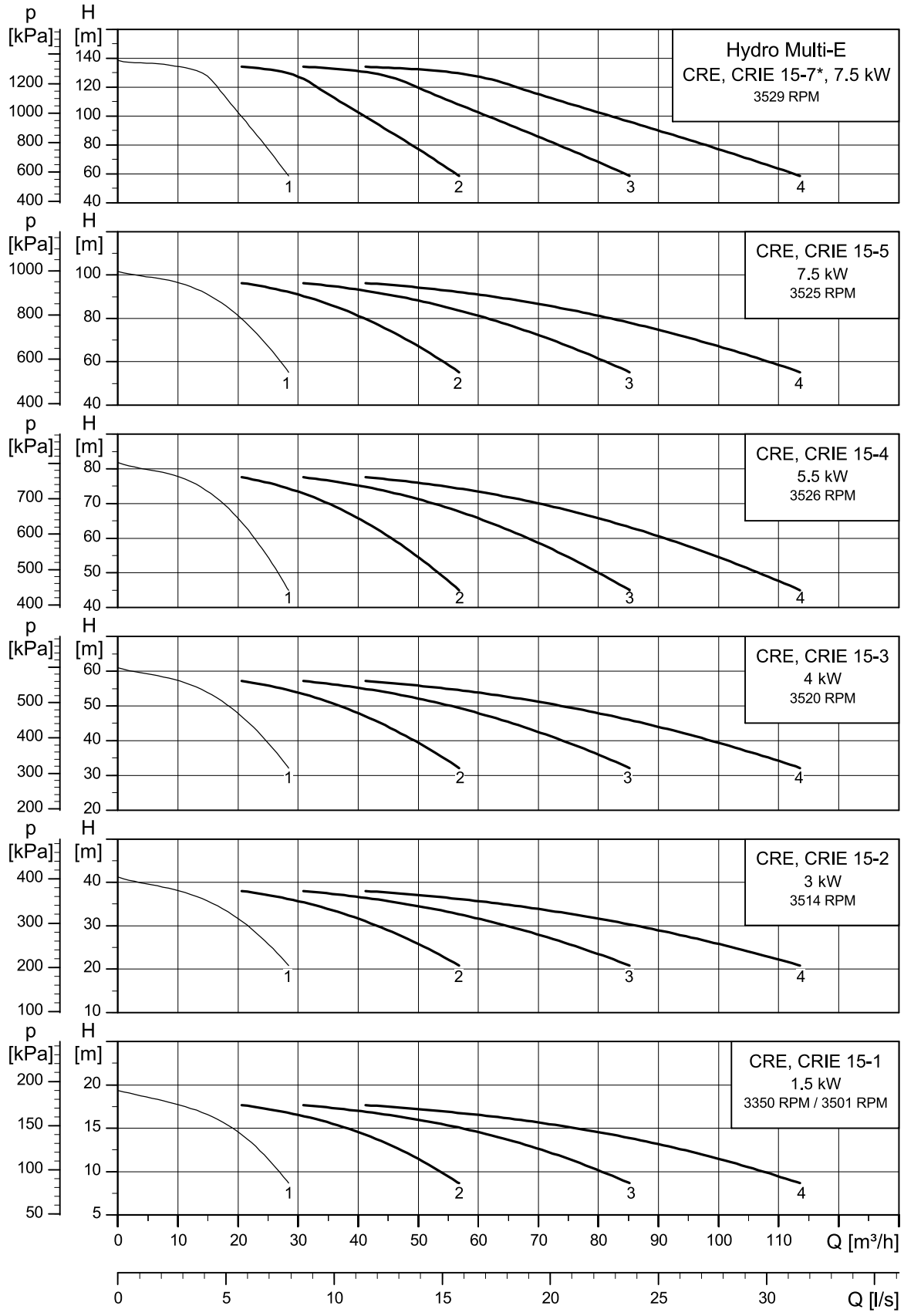


* Using an undersized MGE motor.

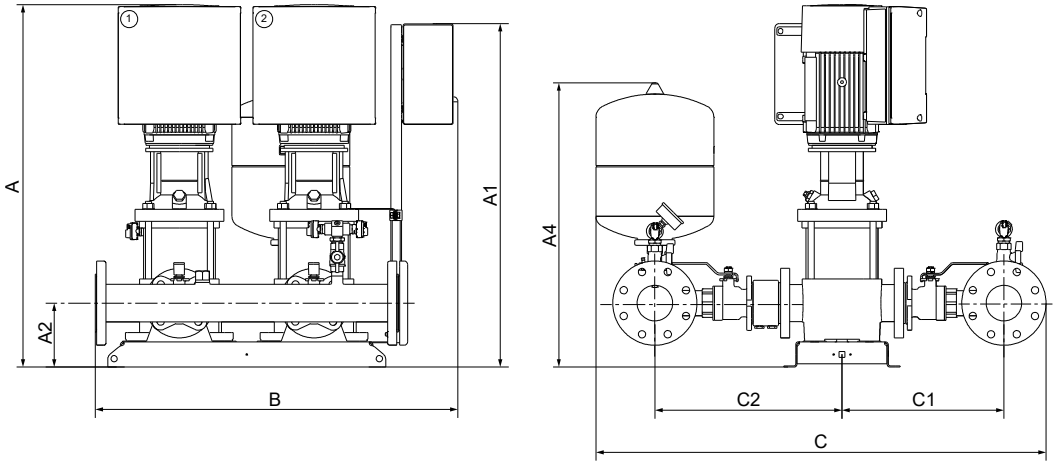


TM084452

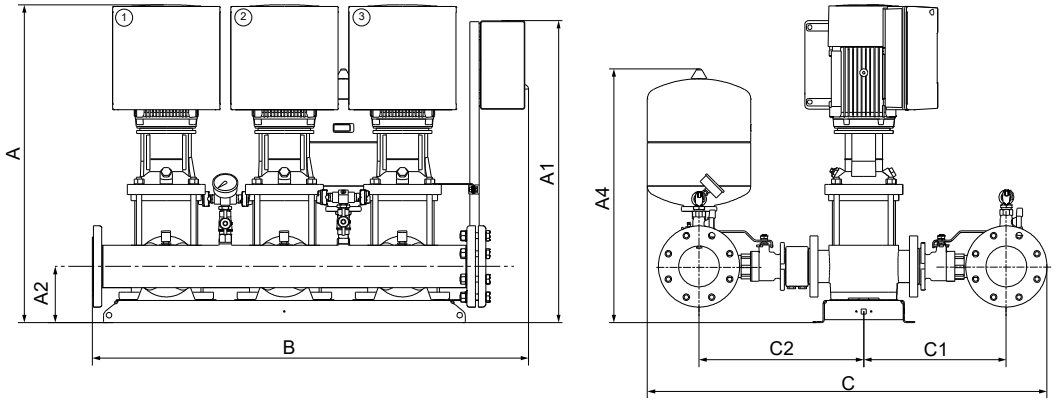


TM084453

| Number of pumps | Pump type | Motor [kW] | Rated current [A] | Max. $I_O$ [A] | Supply voltage: Single-phase motor 3 × 400 V, PE, N | Supply voltage: Three-phase motor 3 × 400 V, PE | Rated speed [rpm] | Diaphragm tank [l] | Connections | A [mm] | A1 [mm] | A2 [mm] | A4 [mm] | B [mm] | C [mm] | C1 [mm] | C2 [mm] | Net weight [kg] | Shipping volume [$m^3$] |
|---|---|---|---|---|---|---|---|---|---|---|---|---|---|---|---|---|---|---|---|
| 2 | CRE, CRIE 15-1 | 1.5 | 8.7 | 8.7 | ● | - | 3350 | 8 | DN 80 | 711 | 815 | 152 | 598 | 813 | 1147 | 437 | 497 | 173 | 1.01 |
| | | | 5.8 | | - | ● | 3501 | 8 | DN 80 | 751 | 815 | 152 | 598 | 813 | 1147 | 437 | 497 | 170 | 1.01 |
| 3 | | | 8.7 | 8.7 | ● | - | 3350 | 8 | DN 100 | 711 | 815 | 152 | 611 | 1133 | 1147 | 437 | 497 | 238 | 1.36 |
| | | | 8.7 | | - | ● | 3501 | 8 | DN 100 | 751 | 815 | 152 | 611 | 1133 | 1147 | 437 | 497 | 241 | 1.36 |
| 4 | | | 17.4 | 17.4 | ● | - | 3350 | 8 | DN 100 | 711 | 815 | 152 | 610 | 1453 | 1147 | 437 | 497 | 308 | 1.71 |
| | | | 11.6 | | - | ● | 3501 | 8 | DN 100 | 751 | 815 | 152 | 610 | 1453 | 1147 | 437 | 497 | 312 | 1.71 |
| 2 | CRE, CRIE 15-2 | 3 | 11.6 | - | - | ● | 3514 | 12 | DN 80 | 814 | 815 | 152 | 578 | 813 | 1174 | 437 | 497 | 241 | 1.06 |
| 3 | | | 17.4 | - | - | ● | 3514 | 12 | DN 100 | 814 | 815 | 152 | 591 | 1133 | 1184 | 437 | 497 | 348 | 1.45 |
| 4 | | | 23.2 | - | - | ● | 3514 | 12 | DN 100 | 814 | 995 | 152 | 590 | 1543 | 1184 | 437 | 497 | 455 | 1.82 |
| 2 | CRE, CRIE 15-3 | 4 | 15.2 | - | - | ● | 3520 | 18 | DN 80 | 859 | 815 | 152 | 658 | 813 | 1174 | 437 | 497 | 254 | 1.12 |
| 3 | | | 22.8 | - | - | ● | 3520 | 18 | DN 100 | 859 | 815 | 152 | 671 | 1133 | 1184 | 437 | 497 | 365 | 1.52 |
| 4 | | | 30.4 | - | - | ● | 3520 | 18 | DN 100 | 859 | 995 | 152 | 670 | 1543 | 1184 | 437 | 497 | 476 | 1.91 |
| 2 | CRE, CRIE 15-4 | 5.5 | 20.6 | - | - | ● | 3526 | 25 | DN 80 | 967 | 815 | 152 | 783 | 813 | 1174 | 437 | 497 | 297 | 1.24 |
| 3 | | | 30.9 | - | - | ● | 3526 | 25 | DN 100 | 967 | 815 | 152 | 796 | 1133 | 1184 | 437 | 497 | 430 | 1.69 |
| 4 | | | 41.2 | - | - | ● | 3526 | 25 | DN 100 | 967 | 995 | 152 | 795 | 1543 | 1184 | 437 | 497 | 563 | 2.13 |
| 2 | CRE, CRIE 15-5 | 7.5 | 28.2 | - | - | ● | 3525 | 25 | DN 80 | 1036 | 815 | 152 | 782 | 1103 | 1174 | 437 | 497 | 322 | 1.74 |
| 3 | | | 42.3 | - | - | ● | 3525 | 25 | DN 100 | 1036 | 815 | 152 | 792 | 1603 | 1184 | 437 | 497 | 463 | 2.48 |
| 4 | | | 56.4 | - | - | ● | 3525 | 25 | DN 100 | 1036 | 995 | 152 | 792 | 2193 | 1184 | 437 | 497 | 609 | 3.21 |
| 2 | CRE, CRIE 15-7 [10] | 7.5 | 28.2 | - | - | ● | 3529 | 25 | DN 80 | 1126 | 815 | 152 | 782 | 1103 | 1174 | 437 | 497 | 328 | 1.88 |
| 3 | | | 42.3 | - | - | ● | 3529 | 25 | DN 100 | 1126 | 815 | 152 | 792 | 1603 | 1184 | 437 | 497 | 472 | 2.68 |
| 4 | | | 56.4 | - | - | ● | 3529 | 25 | DN 100 | 1126 | 995 | 152 | 792 | 2193 | 1184 | 437 | 497 | 621 | 3.47 |

[10] Using an undersized MGE motor.

Motor [kW] is the power per pump.

Max. $I_O$ [A] applies to single-phase MGE motors. The value of the maximum $I_O$ [A] never exceeds the value of the rated current [A].

The material for manifolds is stainless steel.

## Hydro Multi-E with CRE, CRIE 20

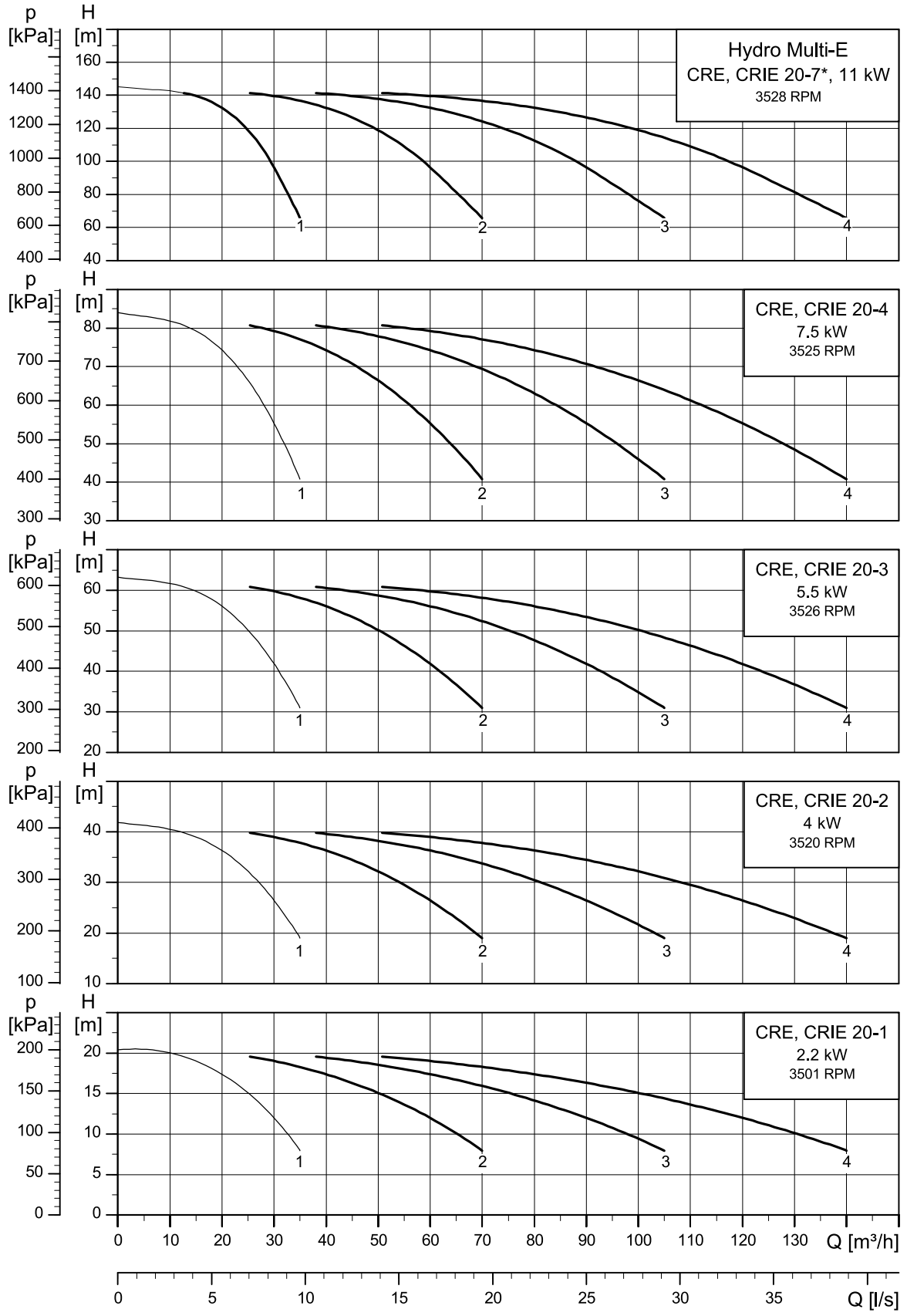


* Using an undersized MGE motor.

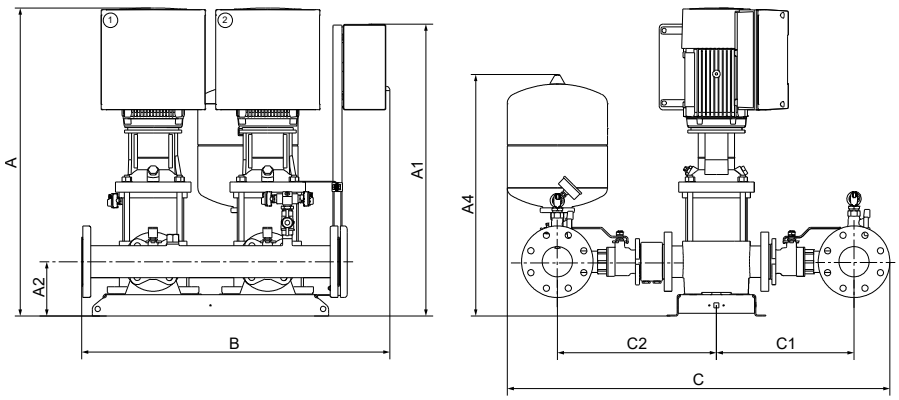


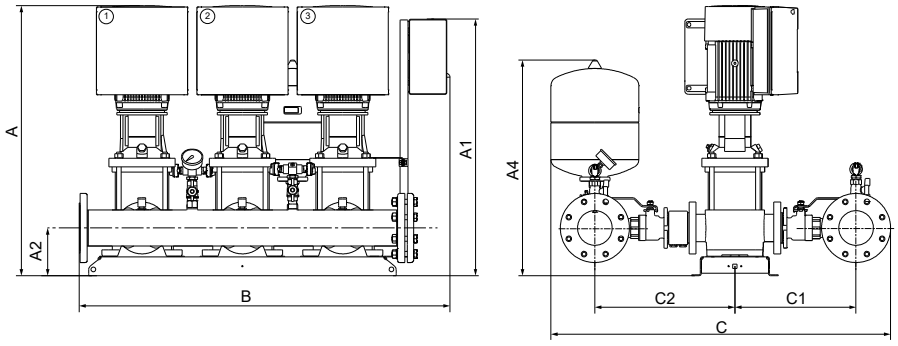


| Number of pumps | Pump type | Motor [kW] | Rated current [A] | Max. $I_O$ [A] | Supply voltage: Single-phase motor 3 × 400 V, PE, N | Supply voltage: Three-phase motor 3 × 400 V, PE | Rated speed [rpm] | Diaphragm tank [l] | Connections | A [mm] | A1 [mm] | A2 [mm] | A4 [mm] | B [mm] | C [mm] | C1 [mm] | C2 [mm] | Net weight [kg] | Shipping volume [$m^3$] |
|---|---|---|---|---|---|---|---|---|---|---|---|---|---|---|---|---|---|---|---|
| 2 | CRE, CRIE 20-1 | 2.2 | 8.3 | - | - | ● | 3501 | 8 | DN 80 | 749 | 815 | 152 | 598 | 813 | 1147 | 437 | 497 | 174 | 1.01 |
| 3 | | | 12.5 | - | - | ● | 3501 | 8 | DN 100 | 749 | 815 | 152 | 611 | 1133 | 1147 | 437 | 497 | 247 | 1.36 |
| 4 | | | 16.6 | - | - | ● | 3501 | 8 | DN 100 | 749 | 995 | 152 | 610 | 1543 | 1147 | 437 | 497 | 320 | 1.71 |
| 2 | CRE, CRIE 20-2 | 4 | 15.2 | - | - | ● | 3520 | 18 | DN 80 | 814 | 815 | 152 | 658 | 813 | 1174 | 437 | 497 | 252 | 1.06 |
| 3 | | | 22.8 | - | - | ● | 3520 | 18 | DN 100 | 814 | 815 | 152 | 671 | 1133 | 1184 | 437 | 497 | 362 | 1.45 |
| 4 | | | 30.4 | - | - | ● | 3520 | 18 | DN 100 | 814 | 995 | 152 | 670 | 1543 | 1184 | 437 | 497 | 472 | 1.82 |
| 2 | CRE, CRIE 20-3 | 5.5 | 20.6 | - | - | ● | 3526 | 25 | DN 80 | 922 | 815 | 152 | 778 | 813 | 1174 | 437 | 497 | 294 | 1.19 |
| 3 | | | 30.9 | - | - | ● | 3526 | 25 | DN 100 | 922 | 815 | 152 | 791 | 1133 | 1184 | 437 | 497 | 426 | 1.62 |
| 4 | | | 41.2 | - | - | ● | 3526 | 25 | DN 100 | 922 | 995 | 152 | 790 | 1543 | 1184 | 437 | 497 | 558 | 2.04 |
| 2 | CRE, CRIE 20-4 | 7.5 | 28.2 | - | - | ● | 3525 | 25 | DN 80 | 991 | 815 | 152 | 782 | 1103 | 1174 | 437 | 497 | 320 | 1.67 |
| 3 | | | 42.3 | - | - | ● | 3525 | 25 | DN 100 | 991 | 815 | 152 | 792 | 1603 | 1184 | 437 | 497 | 460 | 2.39 |
| 4 | | | 56.4 | - | - | ● | 3525 | 25 | DN 100 | 991 | 995 | 152 | 792 | 2193 | 1184 | 437 | 497 | 605 | 3.09 |
| 2 | CRE, CRIE 20-7 [11] | 11 | 40.6 | - | - | ● | 3528 | 25 | DN 80 | 1260 | 995 | 192 | 822 | 1193 | 1174 | 437 | 497 | 387 | 2.08 |
| 3 | | | 60.9 | - | - | ● | 3528 | 25 | DN 100 | 1260 | 995 | 192 | 832 | 1693 | 1184 | 437 | 497 | 561 | 2.97 |
| 4 | | | 81.2 | - | - | ● | 3528 | 25 | DN 100 | 1260 | 995 | 192 | 832 | 2193 | 1184 | 437 | 497 | 739 | 3.85 |

[11] Using an undersized MGE motor.

Motor [kW] is the power per pump.

Max. $I_O$ [A] applies to single-phase MGE motors. The value of the maximum $I_O$ [A] never exceeds the value of the rated current [A].

The material for manifolds is stainless steel.

## Hydro Multi-E with CME 3

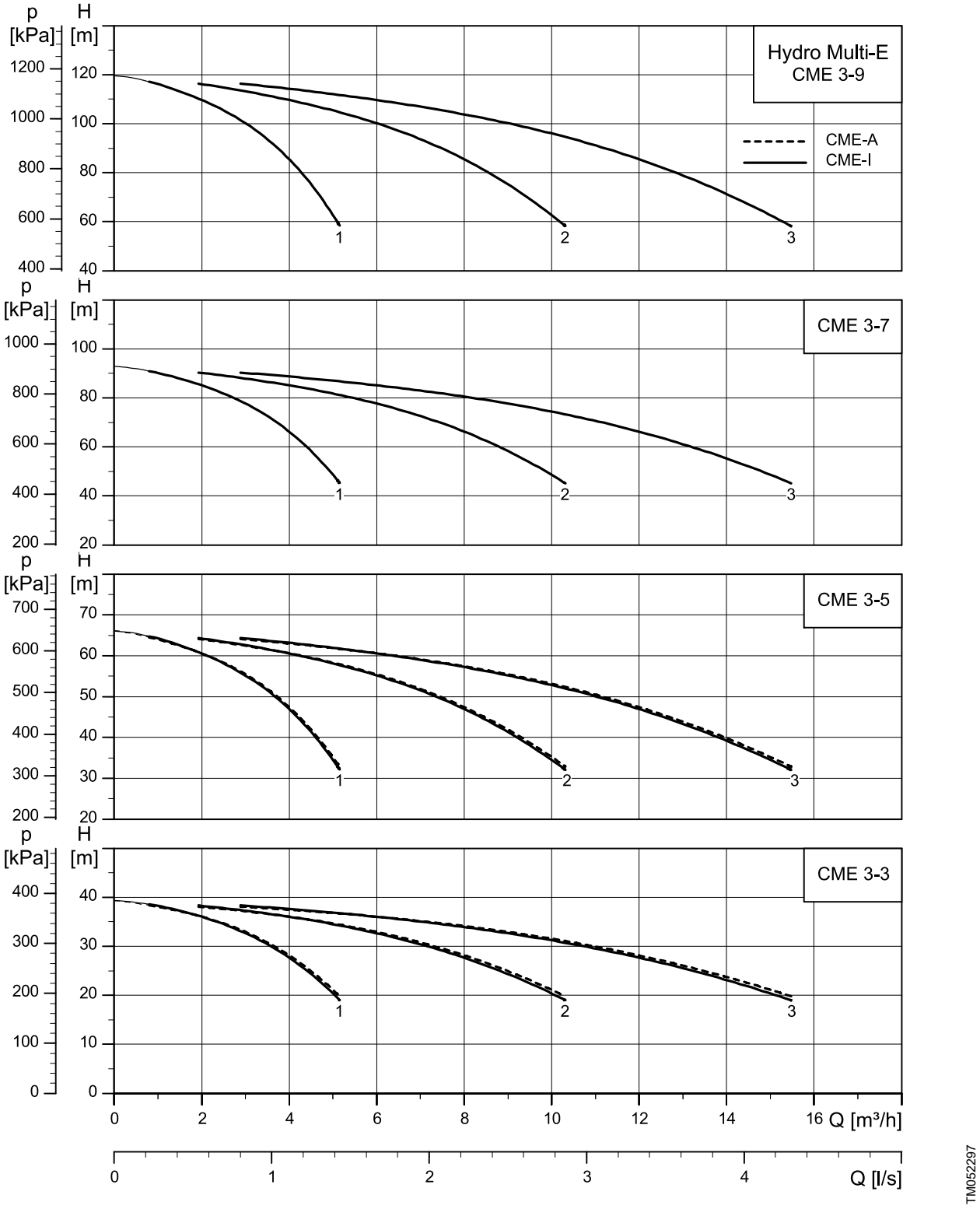


The rated speed for the pumps is approximately 3480 RPM.

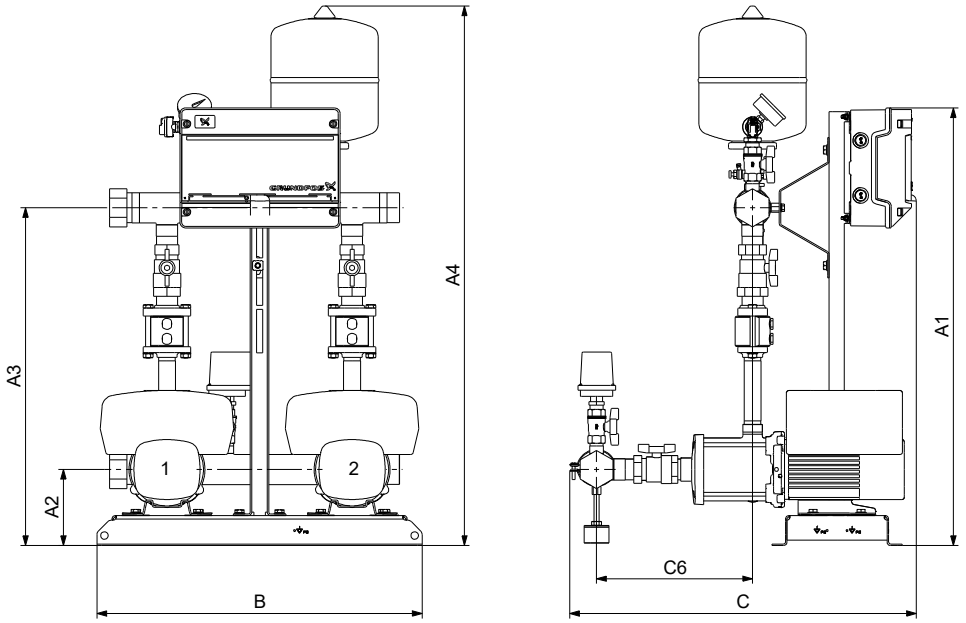


TM084760

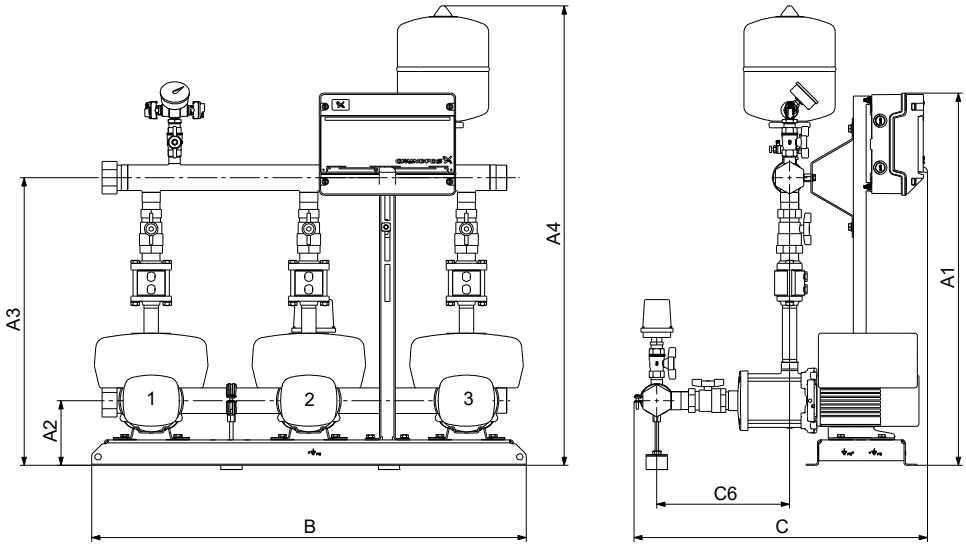


TM084761

| Number of pumps | Pump type | Motor [kW] | Rated current [A] | Max. $I_O$ [A] | Supply voltage: Single-phase motor 3 × 400 V, PE, N | Supply voltage: Three-phase motor 3 × 400 V, PE | Diaphragm tank [l] | Connections | A1 [mm] | A2 [mm] | A3 [mm] | A4 [mm] | B [mm] | C [mm] | C6 [mm] | Net weight [kg] | Shipping volume [$m^3$] |
|---|---|---|---|---|---|---|---|---|---|---|---|---|---|---|---|---|---|
| 2 | CME-I 3-3 | 1.1 | 6.5 | 6.5 | ● | - | 8 | R 1 1/2 | 1040 | 135 | 605 | 1000 | 650 | 590 | 225 | 70 | 1.15 |
| | | | 4.4 | - | - | ● | 8 | R 1 1/2 | 1040 | 135 | 605 | 1000 | 650 | 590 | 225 | 73 | 1.15 |
| 3 | | | 6.5 | 6.5 | ● | - | 8 | R 1 1/2 | 1040 | 135 | 605 | 1000 | 1020 | 590 | 225 | 89 | 1.15 |
| | | | 6.6 | - | - | ● | 8 | R 1 1/2 | 1040 | 135 | 605 | 1000 | 1020 | 590 | 225 | 94 | 1.15 |
| 2 | CME-A 3-3 | 1.1 | 6.5 | 6.5 | ● | - | 8 | R 1 1/2 | 1040 | 135 | 590 | 990 | 650 | 580 | 255 | 66 | 1.15 |
| | | | 4.4 | - | - | ● | 8 | R 1 1/2 | 1040 | 135 | 590 | 990 | 650 | 580 | 255 | 69 | 1.15 |
| 3 | | | 6.5 | 6.5 | ● | - | 8 | R 1 1/2 | 1040 | 135 | 590 | 990 | 1020 | 580 | 255 | 94 | 1.15 |
| | | | 6.6 | - | - | ● | 8 | R 1 1/2 | 1040 | 135 | 590 | 990 | 1020 | 580 | 255 | 99 | 1.15 |
| 2 | CME-I 3-5 | 1.1 | 6.5 | 6.5 | ● | - | 8 | R 1 1/2 | 1040 | 135 | 605 | 1000 | 650 | 625 | 260 | 71 | 1.15 |
| | | | 4.4 | - | - | ● | 8 | R 1 1/2 | 1040 | 135 | 605 | 1000 | 650 | 625 | 260 | 75 | 1.15 |
| 3 | | | 6.5 | 6.5 | ● | - | 8 | R 1 1/2 | 1040 | 135 | 605 | 1000 | 1020 | 625 | 260 | 98 | 1.15 |
| | | | 6.6 | - | - | ● | 8 | R 1 1/2 | 1040 | 135 | 605 | 1000 | 1020 | 625 | 260 | 104 | 1.15 |
| 2 | CME-A 3-5 | 1.1 | 6.5 | 6.5 | ● | - | 12 | R 1 1/2 | 1040 | 135 | 625 | 990 | 650 | 615 | 290 | 67 | 1.15 |
| | | | 4.4 | - | - | ● | 12 | R 1 1/2 | 1040 | 135 | 625 | 990 | 650 | 615 | 290 | 71 | 1.15 |
| 3 | | | 6.5 | 6.5 | ● | - | 12 | R 1 1/2 | 1040 | 135 | 600 | 990 | 1020 | 615 | 290 | 91 | 1.15 |
| | | | 6.6 | - | - | ● | 12 | R 1 1/2 | 1040 | 135 | 600 | 990 | 1020 | 615 | 290 | 96 | 1.15 |
| 2 | CME-I 3-7 | 1.5 | 8.7 | 8.7 | ● | - | 12 | R 1 1/2 | 1040 | 150 | 620 | 1015 | 650 | 660 | 295 | 76 | 1.15 |
| | | | 5.8 | - | - | ● | 12 | R 1 1/2 | 1040 | 150 | 620 | 1015 | 650 | 660 | 295 | 80 | 1.15 |
| 3 | | | 8.7 | 8.7 | ● | - | 12 | R 1 1/2 | 1040 | 150 | 620 | 1015 | 1020 | 660 | 295 | 111 | 1.15 |
| | | | 8.7 | - | - | ● | 12 | R 1 1/2 | 1040 | 150 | 620 | 1015 | 1020 | 660 | 295 | 111 | 1.15 |
| 2 | CME-I 3-9 | 2.2 | 8.3 | - | - | ● | 12 | R 1 1/2 | 1040 | 150 | 580 | 980 | 650 | 700 | 335 | 87 | 1.15 |
| 3 | | | 12.5 | - | - | ● | 12 | R 1 1/2 | 1040 | 150 | 620 | 1015 | 1020 | 700 | 335 | 121 | 1.15 |

The material for manifolds is stainless steel.

## Hydro Multi-E with CME 5

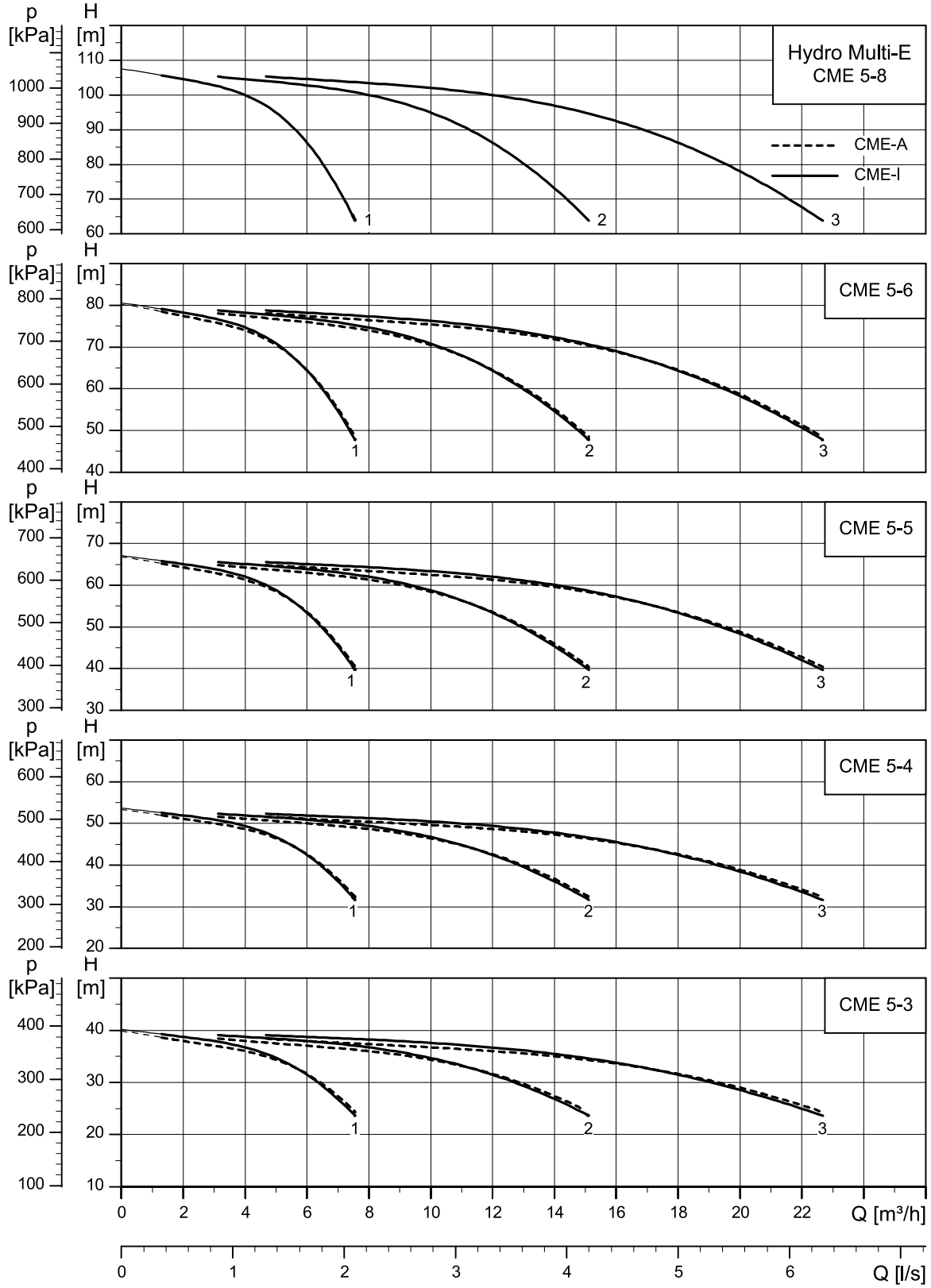


The rated speed for the pumps is approximately 3480 RPM.

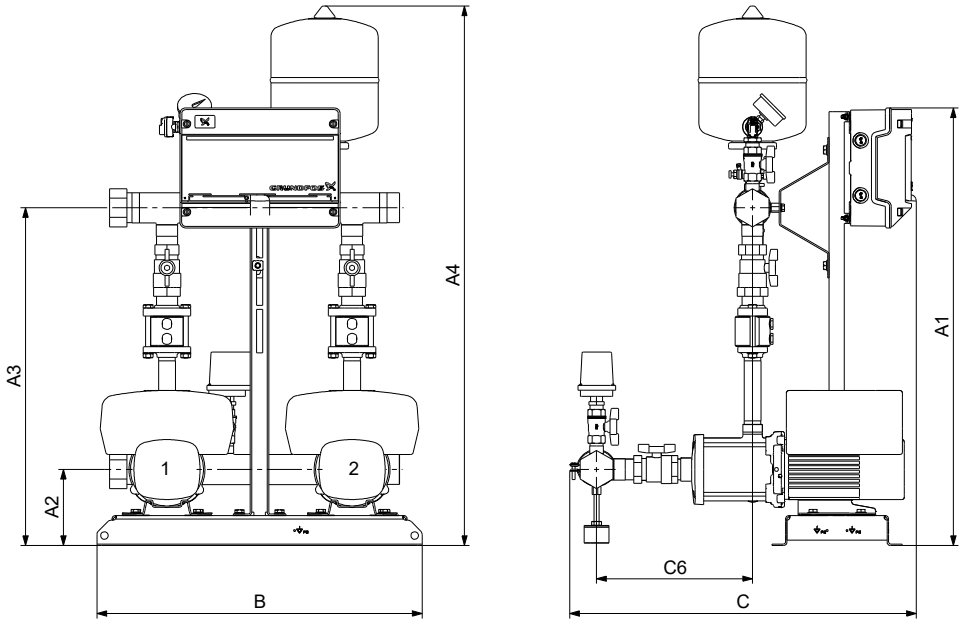


TM084760

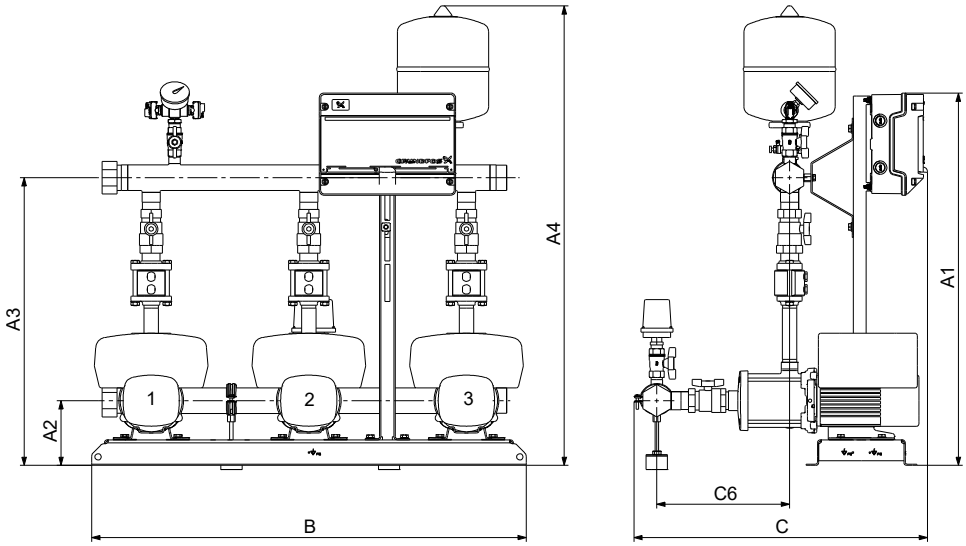


TM084761

| Number of pumps | Pump type | Motor [kW] | Rated current [A] | Max. $I_O$ [A] | Supply voltage: Single-phase motor 3 × 400 V, PE, N | Supply voltage: Three-phase motor 3 × 400 V, PE | Diaphragm tank [l] | Connections | A1 [mm] | A2 [mm] | A3 [mm] | A4 [mm] | B [mm] | C [mm] | C6 [mm] | Net weight [kg] | Shipping volume [$m^3$] |
|---|---|---|---|---|---|---|---|---|---|---|---|---|---|---|---|---|---|
| 2 | CME-I 5-3 | 1.1 | 6.5 | 6.5 | ● | - | 8 | R 2 | 1040 | 135 | 665 | 1065 | 650 | 620 | 240 | 70 | 1.15 |
| | | | 4.4 | - | - | ● | 8 | R 2 | 1040 | 135 | 665 | 1065 | 650 | 620 | 240 | 74 | 1.15 |
| 3 | | | 6.5 | 6.5 | ● | - | 8 | R 2 | 1040 | 135 | 665 | 1065 | 1020 | 620 | 240 | 96 | 1.15 |
| | | | 6.6 | - | - | ● | 8 | R 2 | 1040 | 135 | 665 | 1065 | 1020 | 620 | 240 | 102 | 1.15 |
| 2 | CME-A 5-3 | 1.1 | 6.5 | 6.5 | ● | - | 8 | R 2 | 1040 | 135 | 650 | 1060 | 650 | 610 | 270 | 66 | 1.15 |
| | | | 4.4 | - | - | ● | 8 | R 2 | 1040 | 135 | 650 | 1060 | 650 | 610 | 270 | 70 | 1.15 |
| 3 | | | 6.5 | 6.5 | ● | - | 8 | R 2 | 1040 | 135 | 650 | 1060 | 1020 | 610 | 270 | 91 | 1.15 |
| | | | 6.6 | - | - | ● | 8 | R 2 | 1040 | 135 | 650 | 1060 | 1020 | 610 | 270 | 96 | 1.15 |
| 2 | CME-I 5-4 | 1.5 | 8.7 | 8.7 | ● | - | 8 | R 2 | 1040 | 150 | 675 | 1080 | 650 | 640 | 260 | 74 | 1.15 |
| | | | 5.8 | - | - | ● | 8 | R 2 | 1040 | 150 | 675 | 1080 | 650 | 640 | 260 | 77 | 1.15 |
| 3 | | | 8.7 | 8.7 | ● | - | 8 | R 2 | 1040 | 150 | 675 | 1080 | 1020 | 640 | 260 | 101 | 1.15 |
| | | | 5.8 | - | - | ● | 8 | R 2 | 1040 | 150 | 675 | 1080 | 1020 | 640 | 260 | 107 | 1.15 |
| 2 | CME-A 5-4 | 1.5 | 8.7 | 8.7 | ● | - | 8 | R 2 | 1040 | 150 | 695 | 1110 | 650 | 655 | 275 | 74 | 1.15 |
| | | | 5.8 | - | - | ● | 8 | R 2 | 1040 | 150 | 695 | 1110 | 650 | 655 | 275 | 78 | 1.15 |
| 3 | | | 8.7 | 8.7 | ● | - | 8 | R 2 | 1040 | 150 | 695 | 1110 | 1020 | 655 | 275 | 102 | 1.15 |
| | | | 5.8 | - | - | ● | 8 | R 2 | 1040 | 150 | 695 | 1110 | 1020 | 655 | 275 | 108 | 1.15 |
| 2 | CME-I 5-5 | 2.2 | 8.3 | - | - | ● | 8 | R 2 | 1040 | 150 | 680 | 1080 | 650 | 655 | 280 | 83 | 1.15 |
| 3 | | | 12.5 | - | - | ● | 8 | R 2 | 1040 | 150 | 680 | 1080 | 1020 | 655 | 280 | 115 | 1.15 |
| 2 | CME-A 5-5 | 2.2 | 8.3 | - | - | ● | 8 | R 2 | 1040 | 150 | 695 | 1110 | 650 | 670 | 295 | 79 | 1.15 |
| 3 | | | 12.5 | - | - | ● | 8 | R 2 | 1040 | 150 | 695 | 1110 | 1020 | 670 | 295 | 110 | 1.15 |
| 2 | CME-I 5-6 | 2.2 | 8.3 | - | - | ● | 8 | R 2 | 1040 | 150 | 680 | 1080 | 650 | 690 | 315 | 85 | 1.15 |
| 3 | | | 12.5 | - | - | ● | 8 | R 2 | 1040 | 150 | 680 | 1080 | 1020 | 690 | 315 | 117 | 1.15 |
| 2 | CME-A 5-6 | 2.2 | 8.3 | - | - | ● | 8 | R 2 | 1040 | 150 | 680 | 1090 | 650 | 690 | 315 | 110 | 1.15 |
| 3 | | | 12.5 | - | - | ● | 8 | R 2 | 1040 | 150 | 680 | 1110 | 1020 | 690 | 315 | 156 | 1.15 |
| 2 | CME-I 5-8 | 3 | 11.6 | - | - | ● | 12 | R 2 | 1040 | 162 | 690 | 1090 | 690 | 785 | 350 | 102 | 1.15 |
| 3 | | | 17.4 | - | - | ● | 12 | R 2 | 1040 | 162 | 690 | 1090 | 1060 | 785 | 350 | 143 | 1.15 |

The material for manifolds is stainless steel.

## Hydro Multi-E with CME 10

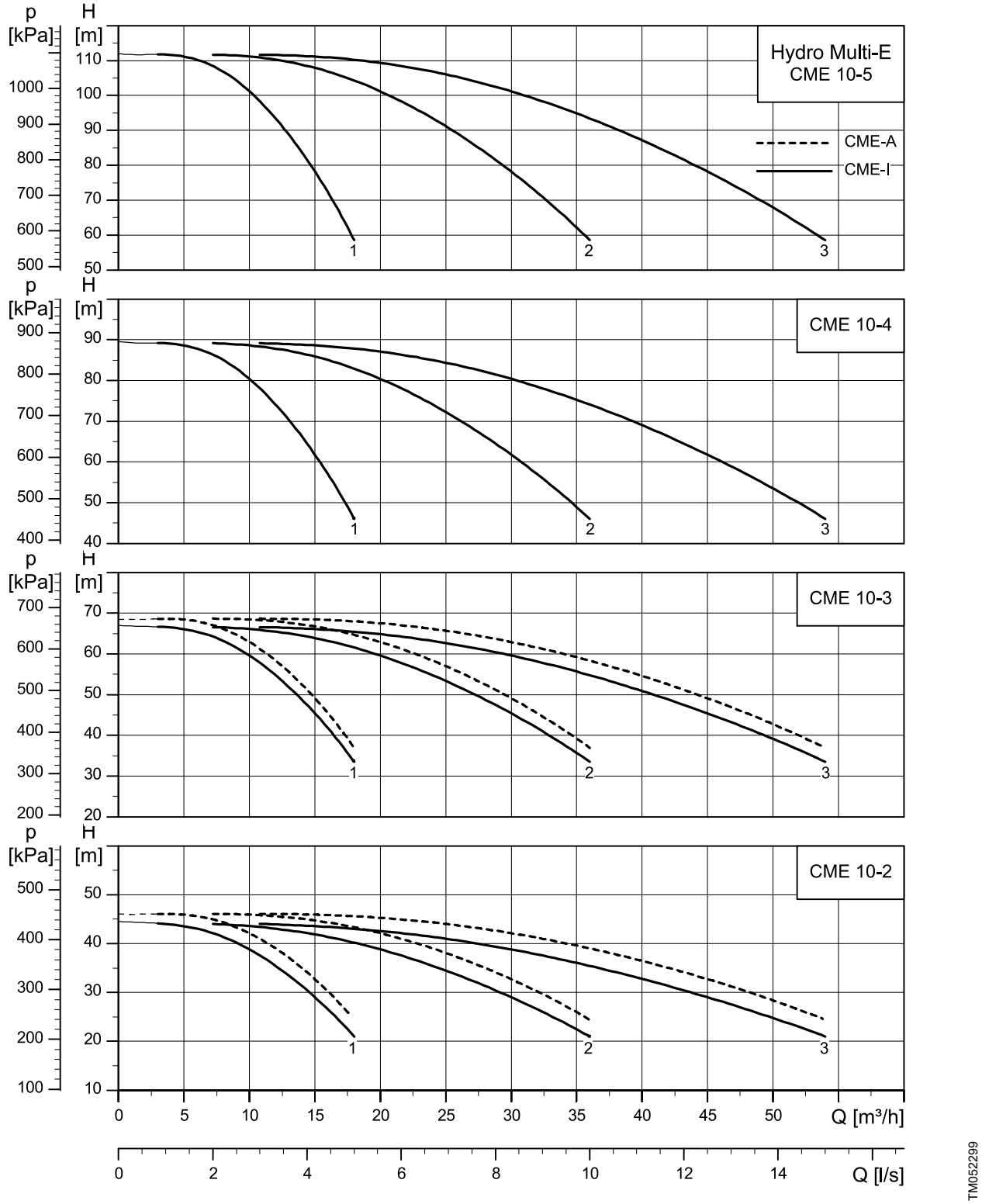


The rated speed for the pumps is approximately 3480 RPM.

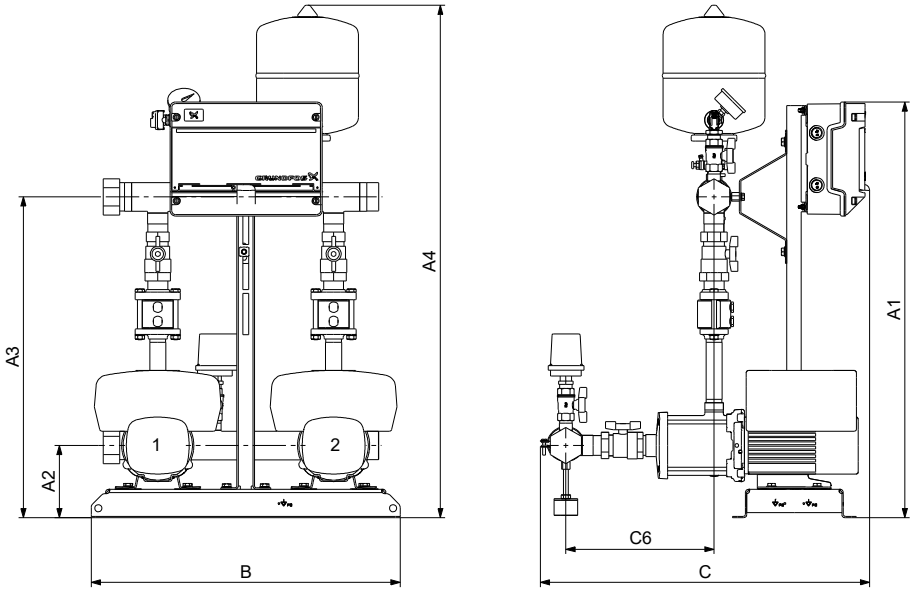


TM084760

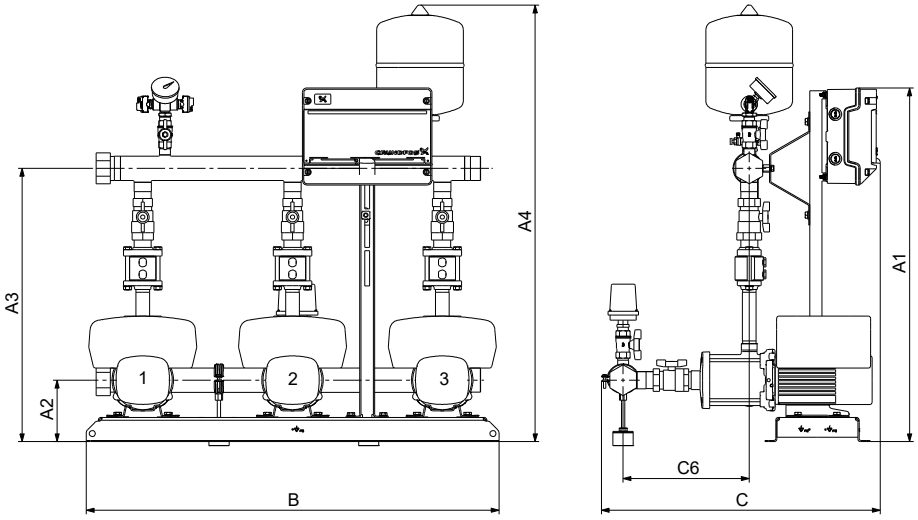


TM084761

| Number of pumps | Pump type | Motor [kW] | Rated current [A] | Max. $I_O$ [A] | Supply voltage: Single-phase motor 3 × 400 V, PE, N | Supply voltage: Three-phase motor 3 × 400 V, PE | Diaphragm tank [l] | Connections | A1 [mm] | A2 [mm] | A3 [mm] | A4 [mm] | B [mm] | C [mm] | C6 [mm] | Net weight [kg] | Shipping volume [$m^3$] |
|---|---|---|---|---|---|---|---|---|---|---|---|---|---|---|---|---|---|
| 2 | CME-I 10-2 | 2.2 | 8.3 | - | - | ● | 8 | R 2 1/2 | 1040 | 162 | 580 | 990 | 690 | 735 | 335 | 97 | 1.15 |
| 3 | | | 12.5 | - | - | ● | 8 | R 2 1/2 | 1040 | 162 | 580 | 990 | 1060 | 735 | 335 | 134 | 1.15 |
| 2 | CME-A 10-2 | 2.2 | 8.3 | - | - | ● | 8 | R 2 1/2 | 1040 | 162 | 610 | 1020 | 690 | 690 | 330 | 104 | 1.15 |
| 3 | | | 12.5 | - | - | ● | 8 | R 2 1/2 | 1040 | 162 | 610 | 1020 | 1060 | 690 | 330 | 147 | 1.15 |
| 2 | CME-I 10-3 | 4 | 15.2 | - | - | ● | 12 | R 2 1/2 | 1040 | 172 | 590 | 1010 | 690 | 805 | 335 | 119 | 1.40 |
| 3 | | | 22.8 | - | - | ● | 12 | R 2 1/2 | 1040 | 172 | 590 | 1010 | 1060 | 815 | 335 | 168 | 1.40 |
| 2 | CME-A 10-3 | 4 | 15.2 | - | - | ● | 12 | R 2 1/2 | 1040 | 172 | 625 | 1040 | 690 | 810 | 360 | 130 | 1.40 |
| 3 | | | 22.8 | - | - | ● | 12 | R 2 1/2 | 1040 | 172 | 625 | 1040 | 1060 | 845 | 360 | 185 | 1.40 |
| 2 | CME-I 10-4 | 5.5 | 20.6 | - | - | ● | 12 | R 2 1/2 | 1040 | 172 | 590 | 1000 | 690 | 855 | 365 | 142 | 1.40 |
| 3 | | | 30.9 | - | - | ● | 12 | R 2 1/2 | 1040 | 172 | 590 | 1000 | 1060 | 855 | 365 | 201 | 1.40 |
| 2 | CME-I 10-5 | 5.5 | 20.6 | - | - | ● | 12 | R 2 1/2 | 1040 | 172 | 590 | 1000 | 690 | 915 | 425 | 145 | 1.40 |
| 3 | | | 30.9 | - | - | ● | 12 | R 2 1/2 | 1040 | 172 | 590 | 1000 | 1060 | 915 | 425 | 206 | 1.40 |

The material for manifolds is stainless steel.

## Hydro Multi-E with CME 15

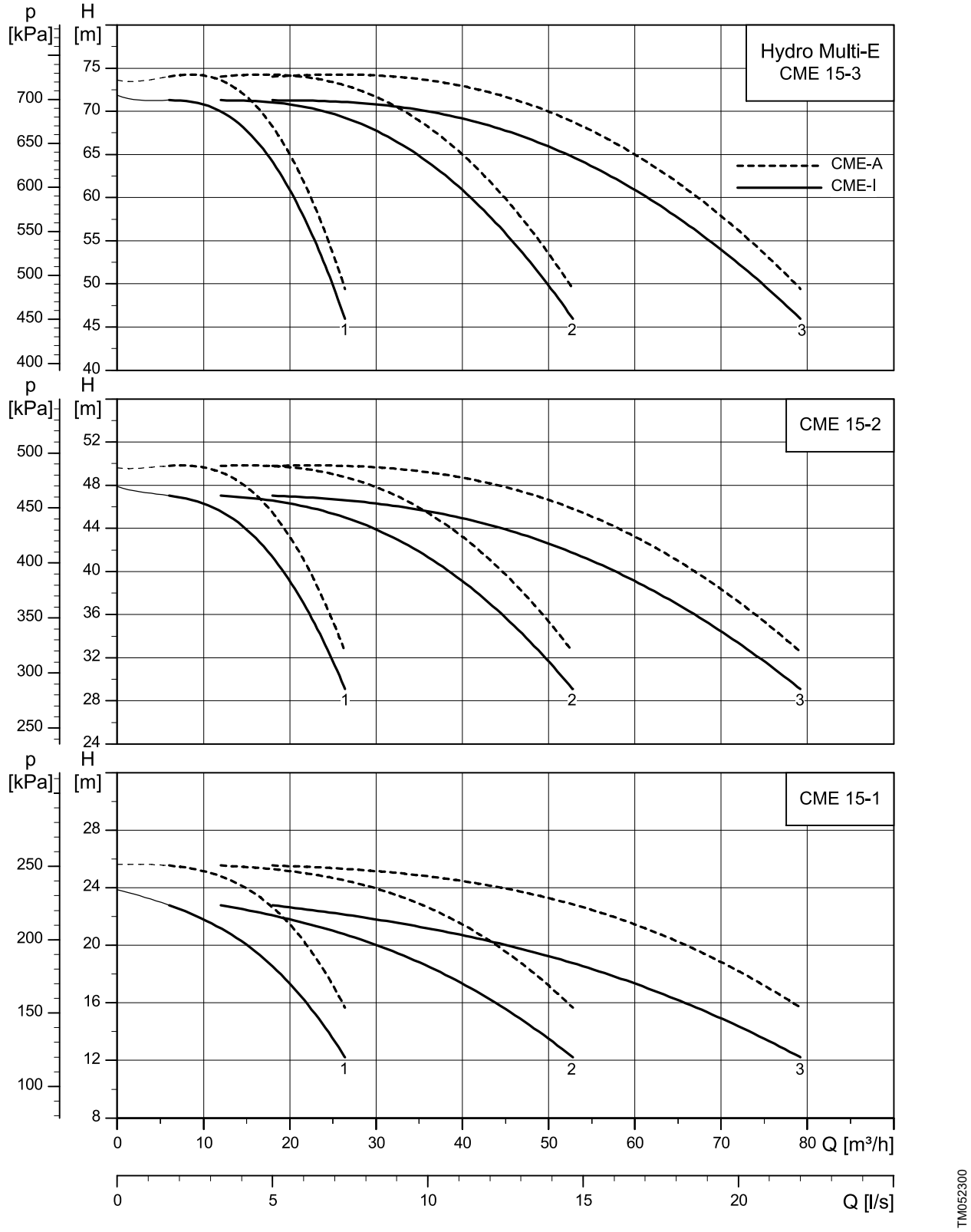


The rated speed for the pumps is approximately 3480 RPM.

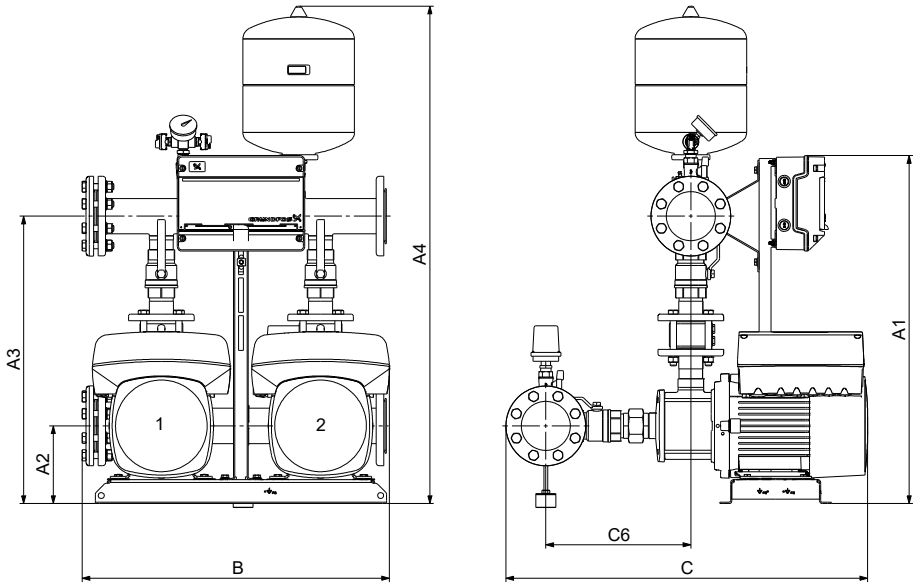


TM084762

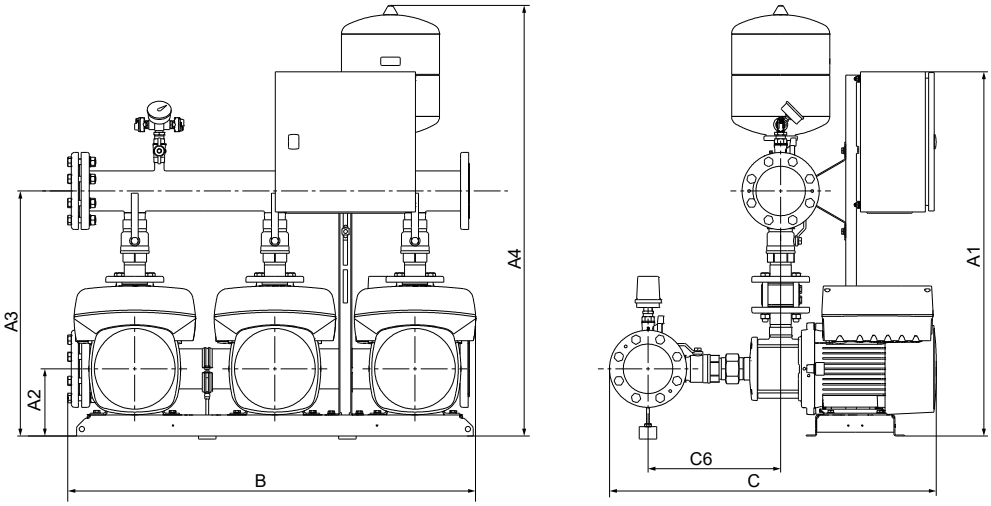


TM084763

| Number of pumps | Pump type | Motor [kW] | Rated current [A] | Max. $I_O$ [A] | Supply voltage: Single-phase motor 3 × 400 V, PE, N | Supply voltage: Three-phase motor 3 × 400 V, PE | Diaphragm tank [l] | Connections | A1 [mm] | A2 [mm] | A3 [mm] | A4 [mm] | B [mm] | C [mm] | C6 [mm] | Net weight [kg] | Shipping volume [$m^3$] |
|---|---|---|---|---|---|---|---|---|---|---|---|---|---|---|---|---|---|
| 2 | CME-I 15-1 | 2.2 | 8.3 | - | - | ● | 8 | DN 80 | 1040 | 162 | 655 | 1180 | 740 | 810 | 365 | 173 | 1.40 |
| 3 | | | 12.5 | - | - | ● | 8 | DN 100 | 1040 | 162 | 670 | 1100 | 1095 | 845 | 380 | 221 | 1.40 |
| 2 | CME-A 15-1 | 2.2 | 8.3 | - | - | ● | 8 | DN 80 | 1040 | 162 | 680 | 1100 | 740 | 755 | 360 | 178 | 1.40 |
| 3 | | | 12.5 | - | - | ● | 8 | DN 100 | 1040 | 162 | 700 | 1130 | 1100 | 800 | 375 | 230 | 1.40 |
| 2 | CME-I 15-2 | 4 | 15.2 | - | - | ● | 18 | DN 80 | 1040 | 172 | 670 | 1190 | 740 | 840 | 365 | 146 | 1.40 |
| 3 | | | 22.8 | - | - | ● | 18 | DN 100 | 1040 | 172 | 680 | 1210 | 1095 | 890 | 380 | 216 | 1.40 |
| 2 | CME-A 15-2 | 4 | 15.2 | - | - | ● | 18 | DN 80 | 1040 | 172 | 690 | 1210 | 740 | 840 | 360 | 149 | 1.40 |
| 3 | | | 22.8 | - | - | ● | 18 | DN 100 | 1040 | 172 | 700 | 1235 | 1100 | 885 | 380 | 213 | 1.40 |
| 2 | CME-I 15-3 | 7.5 | 28.2 | - | - | ● | 18 | DN 80 | 1040 | 192 | 685 | 1205 | 775 | 910 | 365 | 169 | 1.40 |
| 3 | | | 42.3 | - | - | ● | 18 | DN 100 | 1040 | 192 | 705 | 1235 | 1165 | 935 | 380 | 242 | 1.40 |
| 2 | CME-A 15-3 | 7.5 | 28.2 | - | - | ● | 18 | DN 80 | 1040 | 192 | 680 | 1205 | 770 | 915 | 390 | 174 | 1.40 |
| 3 | | | 42.3 | - | - | ● | 18 | DN 100 | 1040 | 192 | 725 | 1252 | 1165 | 945 | 405 | 252 | 1.40 |

The material for manifolds is stainless steel.

# 9. Optional equipment

All optional equipment must be specified when ordering the system, as it must be installed at the factory before delivery. See options in the type key.

The options listed below are not all available for all markets.

| Option | | Description | Location | Options (type key for Hydro Multi-E) |
|---|---|---|---|---|
| Standard hydraulics | 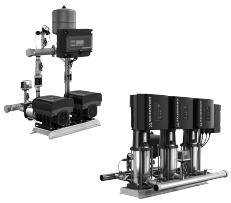 | This is the standard option for Hydro Multi-E hydraulics rated for PN 16 as a minimum. | System | A |
| Outlet sensor on each pump | | As standard, the system is fitted with two outlet-pressure sensors. If required, the system can be fitted with a sensor for each pump. The benefit is that all pumps in the system can act as master pumps and control the system.<br>When more than two outlet-pressure sensors are connected, the sensors are installed in a special connecting piece with a built-in vent in the top. The connecting piece is connected to a drain valve. | Outlet side | C |
| Sensor as dry-running protection | | The system must be protected against dry running. If the system has an inlet pressure, select a pressure transmitter or a pressure switch for dry-running protection. For further description, see section Dry-running protection. | Inlet side | D |
| No dry-running protection | - | The system can be supplied without dry-running protection.<br>We always recommend that you protect your system against dry running. | - | E |
| Level switch for dry-running protection | - | The system must be protected against dry running. If the system draws water from a tank or a well, select a level switch or an electrode relay for dry-running protection. For further description, see section Dry-running protection. | Inlet side | F |
| CIM module included | 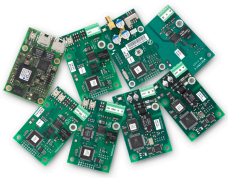 | The CIM modules enable communication of operating data, such as measured values and setpoints, between the system and a building management system.<br>The CIM modules are add-on communication modules that are fitted in the terminal box of the pumps.<br>The CIM modules must be fitted by authorised persons. | - | G |
| No inlet manifold | | Depending on the application or installation site, the system can be ordered without inlet manifold. | - | K |
| Non-return valve on the inlet side | | As standard, the non-return valve is fitted on the outlet side of the pump of the system.<br>For suction-lift operation, the non-return valve must be installed on the inlet side of the pump to prevent dry running. This is often used in combination with a foot valve if the system is drawing water from a tank. | Inlet side | L |
| Pressure gauge on the inlet side | | As standard, the pressure gauge is fitted on the outlet side. Per request, the pressure gauge can be fitted on the inlet side. | Inlet side | M |
| PN 25 pressure rating | - | With this option the Hydro Multi-E hydraulics are rated to PN 25 as a minimum. | System | O |
| Customised variant | - | Customised systems can be produced on request.<br>For further information contact Grundfos. | System | S |

| Option | | Description | Location | Options (type key for Hydro Multi-E) |
|---|---|---|---|---|
| Certificate | - | For further information contact Grundfos. | - | T |
| Undersized motor | | We recommend a Hydro system with undersized motors if operating conditions deviate from those stated in the Hydro Multi-E Data Booklet and Grundfos Product Center.<br>We especially recommend undersized motors if the duty point is constant and the flow rate is significantly lower than the maximum recommended flow rate. | - | U |
| More than three options | - | More than three options are selected on request. | - | X |

**Related information**

*Type key*

*Dry-running protection*

## Dry-running protection

As standard, the system is fitted with a pressure switch for dry-running protection. The switch is installed on the inlet manifold.

Optionally, a level switch can be used instead of the pressure switch if the system draws water from a break tank.

As an alternative, the system can be factory-fitted with inlet-pressure sensors for dry-running protection.

The benefit of this option is that it is easier to adjust the trigger level of a sensor and that the inlet pressure can be monitored with Grundfos GO and via a connected BMS (CIM required).

To ensure proper protection against dry running, the inlet-pressure sensor must be connected to the pumps that can potentially act as master pumps. This means that every pump with an outlet-pressure sensor must also have an inlet-pressure sensor.

The sensors are available from 0 to 1 bar and from 0 to 6 bar.

If a sensor is used for dry-running protection, you need Grundfos GO to adjust the trigger level of the sensor.

If the system is fitted with two outlet-pressure sensors (standard), the two inlet-pressure sensors must be installed on the inlet manifold with a drain valve and a T-piece. The drain valve allows for test of the dry-running function.

If the system is configured with more than two outlet-pressure sensors, a special connecting piece with a built-in vent must be used. The connecting piece is connected to a drain valve.

When you select inlet-pressure sensors for dry running protection, the standard pressure switch will not be supplied with the system.

# 10. Accessories

## Communication interface module

We offer the following CIMs:

| Description | Fieldbus protocol | Product number |
|---|---|---|
| CIM 050 | GENIbus | 96824631 |
| CIM 100 | LONWorks | 96824797 |
| CIM 110 | LONWorks | 96824798 |
| CIM 150 | PROFIBUS DP | 96824793 |
| CIM 200 | Modbus RTU | 96824796 |
| CIM 260 | EU 3G/4G cellular networks [12)] | 99439302 |
| CIM 290 | MA LPWAN GIC for Grundfos iSOLUTIONS Cloud Application like Grundfos Connect (including eUICC SIM card) Cellular LTE-M [13)] | 92865300 |
| CIM 300 | BACnet MS/TP | 96893770 |
| CIM 500 | PROFINET IO, Modbus TCP, BACnet IP, EtherNet/IP | 98301408 |
| CIM 550 | Ethernet for Grundfos iSOLUTIONS Cloud applications like Grundfos Connect [13)] | 92546689 |

12) It is a soft CIM built-in motor with FM 310 and FM 301. It is only available in regional version for EU, and it requires an external 4G/3G/2G antenna for EU with PN 99518079 and a SIM data subscription card.

13) It requires an external 4G/3G antenna for EU with PN 99838775. Always reach out to Grundfos to align whether the wished product is supported from cloud side and whether the CIM interface is available for your region. The interface will be delivered with an eUICC SIM card in the package with a Grundfos specific roaming profile, and it requires a contract with Grundfos. Contact Grundfos to verify that your product is supported from the cloud, as this depends on the available cloud driver and regional availability.

For further information about data communication via CIM modules and fieldbus protocols, see the CIM documentation available in Grundfos Product Center.

## MI 301

MI 301 is a module with built-in infrared and radio communication. MI 301 must be used in conjunction with an Android or iOS-based Smartphone via Bluetooth connection. MI 301 has a rechargeable Li-ion battery and the battery must be charged separately.

TM053890

*MI 301*

These parts are supplied with MI 301:

- a battery charger
- a quick guide.

# 11. Product manuals

| Title | Document type | QR code | Link | Publication number |
|---|---|---|---|---|
| Hydro Multi-E | Installation and operating instructions | | *http://net.grundfos.com/qr/i/98491894* | 98491894 |
| Hydro Multi-E with CME 0.37 - 7.5 kW | Quick guide | | *http://net.grundfos.com/qr/i/92937221* | 92937221 |
| Hydro Multi-E with CRE, CRIE 0.37 - 11 kW | Quick guide | | *http://net.grundfos.com/qr/i/98477592* | 98477592 |
| CRE, CRIE, CRNE, SPKE, MTRE, CME, BMS E-pumps with MGE Model J, K motor | Installation and operating instructions | | *http://net.grundfos.com/qr/i/92898118* | 92898118 |

The documents are available in Grundfos Product Center on www.grundfos.com.

**Related information**

*13. Grundfos Product Center*

# 12. App for downloading

**Grundfos GO**

Grundfos GO is the mobile toolbox for professional users on the GO. It is the most comprehensive platform for mobile pump control and pump selection, including sizing, replacement and documentation. It offers intuitive, handheld assistance and access to Grundfos online tools, and it saves valuable time for reporting and data collection.

For Apple mobiles, download the app from App Store. For Android mobiles, download the app from Google play.

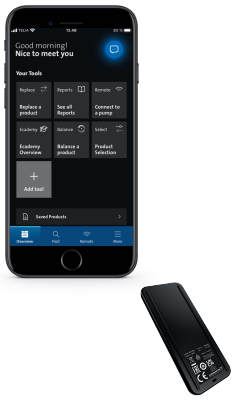

GET IT ON Google play

Available on the App Store

**Grundfos GO Link**

Grundfos GO Link is only available *here* from Grundfos Product Center.

# 13. Grundfos Product Center

Online search and sizing tool to help you make the right choice.
From the international view, you can select your specific country to view the product range available to you.
International view: *http://product-selection.grundfos.com*

**All the information you need in one place**

Performance curves, technical specifications, pictures, dimensional drawings, motor curves, wiring diagrams, spare parts, service kits, 3D drawings, documents, system parts. The Product Center displays any recent and saved items - including complete projects - right on the main page.

**Downloads**

On the product pages, you can download installation and operating instructions, data booklets, service instructions, etc., in PDF format.

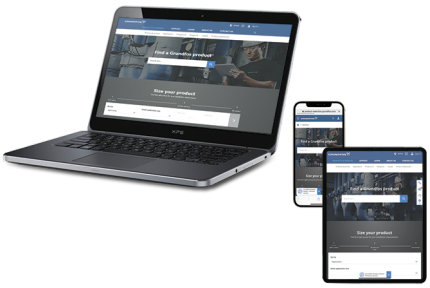

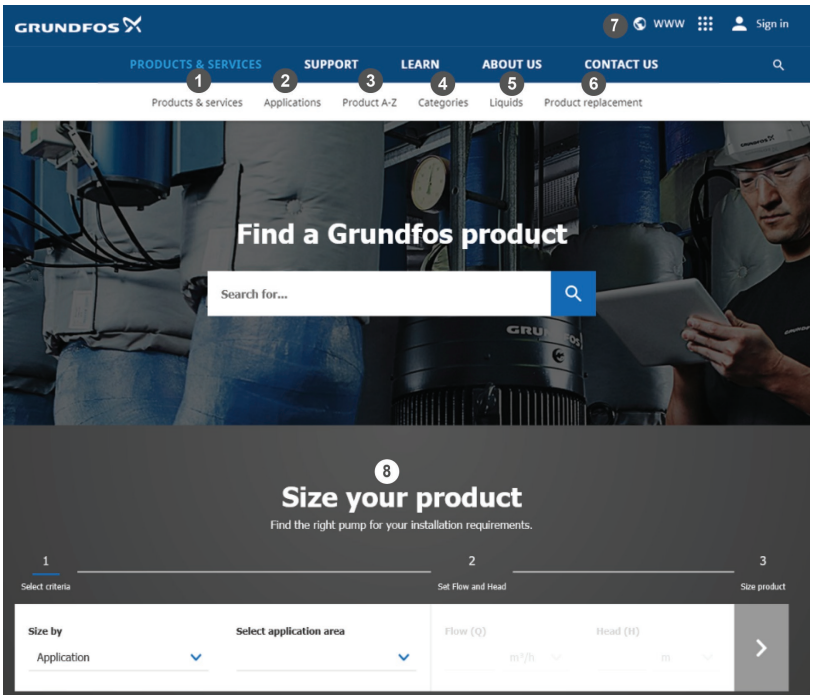


When you select your country, you will see the menus below. Note that some menus may not be available depending on the country.
Example: *https://product-selection.grundfos.com/uk*

| Pos. | Description |
|---|---|
| 1 | **Products & services** enables you to find products and documents by typing a product number or name into the search field. |
| 2 | **Applications** enables you to choose an application to see how Grundfos can help you design and optimise your system. |
| 3 | **Products A-Z** enables you to look through a list of all the Grundfos products. |
| 4 | **Categories** enables you to look for a product category. |
| 5 | **Liquids** enables you to find pumps designed for aggressive, flammable or other special liquids. |
| 6 | **Product replacement** enables you to find a suitable replacement. |
| 7 | **WWW** enables you to select the country, which changes the language, the available product range and the structure of the website. |
| 8 | **Sizing** enables you to size a product based on your application and operating conditions. |

# 14. Document quality feedback

To provide feedback about this document, scan the QR code using your phone's camera or a QR code app.

FEEDBACK96488673

*Click here to submit your feedback*

Trademarks displayed in this material, including but not limited to Grundfos and the Grundfos logo, are registered trademarks owned by The Grundfos Group. © 2024 Grundfos Holding A/S, all rights reserved.

**96488673** **11.2024**
ECM: 1399247

**GRUNDFOS Holding A/S**
Poul Due Jensens Vej 7
DK-8850 Bjerringbro
Tel: +45 87 50 14 00
www.grundfos.com

GRUNDFOS