Vaccuperm VGB-103

Compact dosing regulator

GB **Service instructions**

Contents

1. Of general interest ... 3
1.1 Structure of the documentation ... 3
1.2 About this manual ... 3
1.3 User/target groups ... 3
1.4 Responsibilities of the operator ... 4
1.5 Maintenance and service personnel ... 4
1.6 Correct usage ... 4
1.7 Inappropriate usage ... 4
2. Technical Data ... 5
2.1 Type key VGB-103 ... 5
2.2 General data ... 6
2.3 Dimensioned drawing ... 7
3. Installation ... 7
3.1 Transport and storage ... 7
3.2 Unpacking ... 7
3.3 Typical installation ... 8
3.4 Mounting ... 8
4. Commissioning ... 9
4.1 Preparations for commissioning ... 9
4.2 Checks before commissioning ... 10
5. Maintenance ... 12
5.1 Possible faults ... 12
5.2 Cleaning the Inlet Valve ... 13
5.3 Cleaning the measuring tube ... 14
5.4 Cleaning the rate valve ... 16
5.5 Cleaning the vacuum regulator ... 18
6. Spare Parts ... 19

Warning
These operating instructions are also available on www.Grundfosalldos.com.
Prior to installation, read these installation and operating instructions. Installation and operation must comply with local regulations and accepted codes of good practice.

1. Of general interest

1.1 Structure of the documentation

The Grundfos Alldos device VGB-103 is a state-of-the-art solution, which complies with recognised safety regulations. Conformity with applicable standards, directives and laws has been verified.
Nevertheless, certain risks which cannot be prevented by the manufacturer are associated with the use of the system.
Purpose of this manual:

- Inform users of optimum use.
- Warn users of possible residual risks when using correctly and identify measures that should be taken to avoid damage.
- Caution users against obvious misuse or inappropriate use and inform them of the necessary care that must be taken when operating the system.

1.2 About this manual

This manual contains the following standardised safety instructions about possible residual risks:

Warning
If these safety instructions are not observed, it may result in personal injury!

Caution ***If these safety instructions are not observed, it may result in malfunction or damage to the equipment!***

Note ***Notes or instructions that make the job easier and ensure safe operation.***

Information about possible residual risks is provided:

- On warning signs displayed in the installation location.
- At the start of each section in this manual.
- Directly before any operating procedures that could involve residual risks.

1.3 User/target groups

Users are persons who are responsible for operating and monitoring the device VGB-103 at the installation location. The system may only be operated by trained and qualified personnel. Personnel must have appropriate technical knowledge and be familiar with the basic principles of measuring and control technology.

1.3.1 Responsibilities of the users

The users' responsibilities

- Read this manual before operating the VGB-103.
- Be trained by qualified personnel from Grundfos Alldos in the operation of the system.
- Observe the recognised regulations governing safety in the workplace and accident prevention.
- Wear appropriate protective clothing in accordance with national regulations for the prevention of accidents when operating the system and handling chemicals (German GUV-V D05).

1.4 Responsibilities of the operator

The owner of the building or operator of the VGB-103 is responsible for the following:

- Consider this manual to be part of the product and ensure that it is kept clearly accessible in the immediate vicinity of the system for the entire service life of the system.
- Meet the installation requirements specified by the manufacturer (required water connections and fittings, environmental conditions, electrical connection, protective pipe for dosing line if necessary, audible or optical warning device for alarm messages if necessary).
- Ensure that water lines and fixings are regularly checked, serviced and maintained.
- Obtain official approval for storing chemicals, if necessary.
- Train users in the operation of the system.
- Ensure that the regulations for the prevention of accidents are observed in the installation location (German GUV-V D05 regulation for the prevention of accidents, "Chlorination of Water" dated January 1997).
- Provide all users and service personnel with protective clothing in accordance with GUV-V D05 (face mask, gloves, protective apron).

1.5 Maintenance and service personnel

The system may only be maintained and serviced by authorised service personnel from Grundfos Alldos.

1.6 Correct usage

The Grundfos Alldos VGB-103 may be used for dosing chlorine, Cl2, as being described in this manual.

1.7 Inappropriate usage

Applications other than those listed in section 1.6 Correct usage are considered not to be in accordance with the intended use and are not permitted. The manufacturer, Grundfos Alldos, accepts no liability for any damage resulting from incorrect use.

The system comprises state-of-the-art components and has undergone safety-related testing.

Warning

Unauthorised structural modifications to the system may result in serious damage to equipment and personal injury.

It is forbidden to open, modify, change the structure of, bridge, remove, bypass or disable components, especially safety equipment.

2. Technical Data

2.1 Type key VGB-103

Example: Compact dosing regulator Type key VGB-103-250/1-S-1-O, BO

Code	Example		VGB-103	-250	/1	-S	-1	-O	, -B	0
	Vaccuperm Gas Basic = VGB									
	Dosing flow									
100	5 - 100 g/h									
250	10 - 250 g/h									
500	25 - 500 g/h									
1000	50 - 1000 g/h									
2000	100 - 2000 g/h									
3000	150 - 3000 g/h									
4000	400 - 4000 g/h									
	Pressure connection									
1	G 1									
2	G 3/4									
3	Yoke USA									
	Inlet valve									
B	Basic	only with bottle								
S	Short	only with bottle								
L	Long, 230-240V/50-60Hz	only with drum								
M	Long, 110-115V/50-60Hz	only with drum								
	Pressure indication									
0	No pressure gauge									
1	With pressure gauge	bottle: connection left		drum: connection on top						
	Filter									
O	Outside									
U	Inside									
	Direct installation									
B	Bottle, pressure input frontal									
D	Drum, pressure input left									
	Residual pressure device									
1	Yes									
0	No									

2.2 General data

Accuracy	± 4 % of upper limit
Control range	1 : 20
Empty indication	Optical empty indication
Flow meter	According to the floater principle, length of the measuring tube 70 mm
Weight	1 kg

2.2.1 Dosing Flow

5-100 g/h	0.2-5 lbs/day
10-250 g/h	0.5-14 lbs/day
25-500 g/h	1.5-26 lbs/day
50-1000 g/h	2.5-50 lbs/day
100-2000 g/h	5-100 lbs/day
150-3000 g/h	10-150 lbs/day
400-4000 g/h	30-220 lbs/day

2.2.2 Pressure indication

Version	With pressure gauge
	No pressure gauge

2.2.3 Pressure connection (inlet)

Version	Closed yoke (USA)
	Union nut G 1
	Union nut G 3/4

Vacuum connection (to the injector)	for hose 8/11
Overpressure connection	for hose 8/11

2.2.4 Accessories (not including)

Installation material: Hoses of different lengths
Holding plate for wall fixing at change of container
Test medium for leak search

2.3 Dimensioned drawing

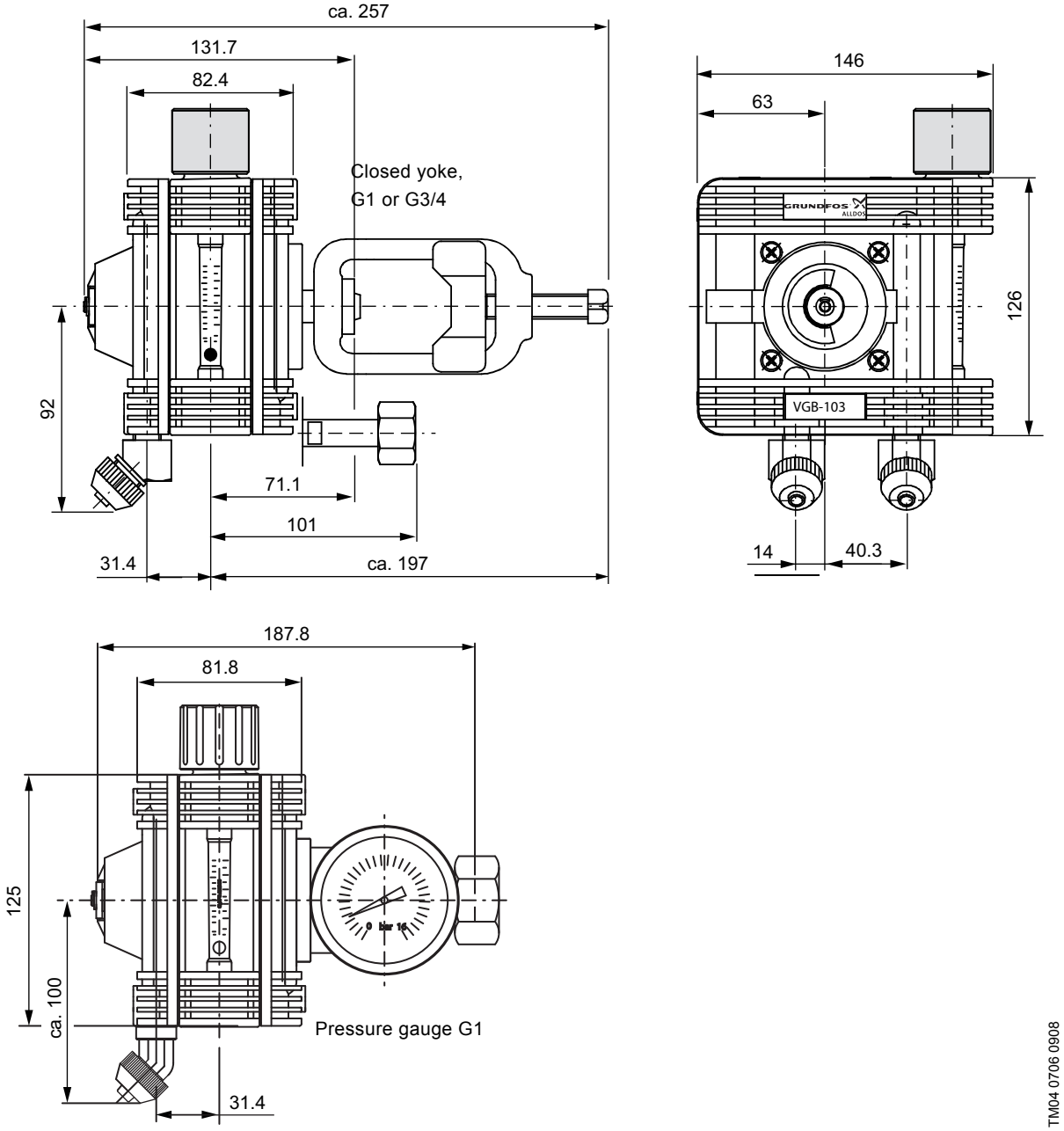

Fig. 1 Dimensioned drawing of chlorine compact device

3. Installation

3.1 Transport and storage

- Handle with care, do not throw!
- Dry and cool storage place.

3.2 Unpacking

- Observe when unpacking:
  – No humidity should get into gas-leading parts!
  – No foreign matter should get into gas-leading parts!
- Check the scope of delivery.
- Mount as soon as possible after unpacking.

3.3 Typical installation

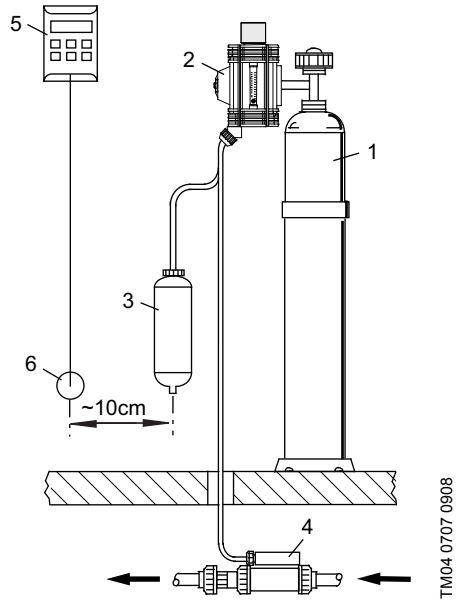

Fig. 2 Typical installation

Item	Description
1	Gas cylinder
2	Compact Dosing vaccuperm VGB-103
3	Adsorption device
4	Injector
5	Gas warning device
6	Gas sensor

3.4 Mounting

Warning
Please read Installation and operating instruction, Chapter 2: Handling Chlorine.

- The cylinder must be properly placed and fixed.
- All connections must be absolutely clean and dry.
- Remove the protective cap from the cylinder.

Warning
Never re-use used gaskets!
Replace the gaskets at any change of gas container!
Never use the device without the filter!

- Insert the gasket at the pressure connection of the device.
- Do not remove the filter at the pressure connection of the device!
- Screw the device onto the connection of the cylinder

Caution ***Do not align the device by turning the housing!***
If necessary, hold up with a fork wrench size 13!

4. Commissioning

Warning
The system may only be commisioned by authorised service personel from Grundfos Alldos

4.1 Preparations for commissioning

4.1.1 Vacuum connections

Warning
Before connecting, ensure that the valves of all gas containers are closed.
Only use the intended line types!

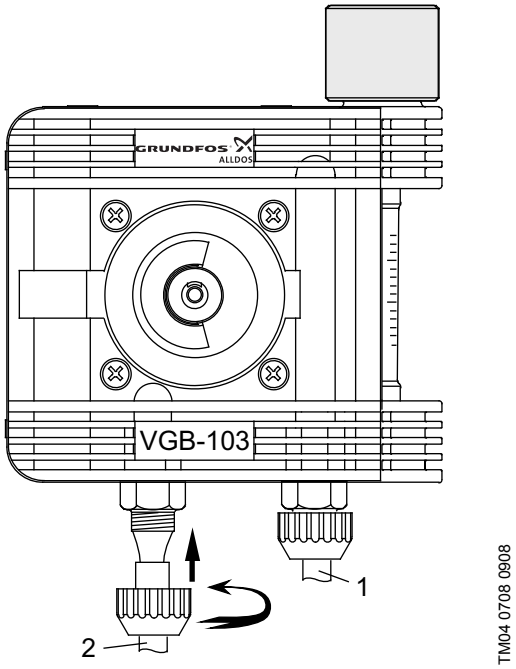

Fig. 3 Vacuum connections

Item	Description
1	Vacuum line to the injector
2	Overpressure line

Only tighten the union nuts of the vacuum connections by hand.
Do not use any tools!

Caution ***Danger of damages!***
Maximum length of the vacuum line, read Installation and operating instruction VGB-103, chapter 2: Handlilng chlorine.

Note ***If using a device with absorption fluid:The overpressure line must not dip into theabsorption fluid!***

- Connect the vacuum line (1) to the injector

Warning
Lead the overpressure line downwards, as chlorine is heavier than air.
Connect the overpressure line to a suitable adsorption device.
If using a gas warning device: Mount the sensor in a distance of about 10 cm from the outlet hole of the adsorption device.

- Connect the overpressure line (2).

4.2 Checks before commissioning

Check tightness of the total plant before start-up

Warning
Check the tightness not until the total plant is ready for start-up.
Danger of gas leakage!

4.2.1 Checking the gas solution lines and the non-return diaphragm of the injector

- Observe the manual of the injector!

4.2.2 Checking the tightness (media Cl_2)

Warning
Liquid ammonia must not come in contact with parts of the plant!
Danger of leakages by corrosion!

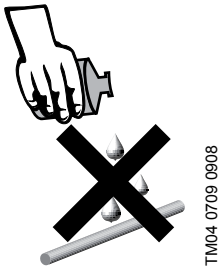

Fig. 4 No liquid ammonia

Checking the pressure connections (after changing gas cylinder)

- Open the cylinder valve and quickly close it again.
- Slowly pass the open ammonia bottle along gas-leading parts.
  – Slightly presss the bottle in a pumping manner, allowing the ammonia mist to rise up.
  – Formation of white mist: Leakage at the pressure connection!
- Depressurize the plant!
- Eliminate leakage!
- Check tightness again

Formation of white mist --> pressure connection is not tight

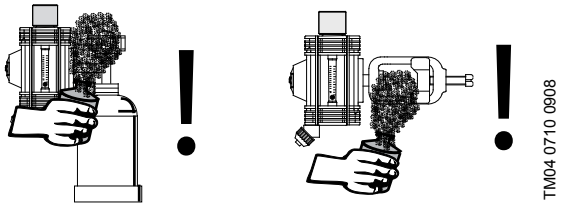

Fig. 5 Ammonia + chlorine gas --> formation of white mist

No formation of white mist --> pressure connection is tight

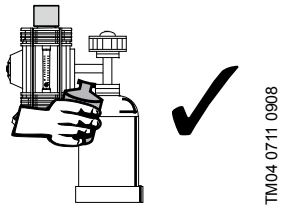

Fig. 6 No chlorine gas --> no formation of white mist

Checking the inlet valve

- Remove the union nut at the overpressure connection and take off the overpressure line.
- Close the rate valve.
- Open the cylinder valve.
- Slowly pass the open ammonia bottle along the overpressure connection.
  – Slightly press the bottle in a pumping manner, allowing the ammonia mist to rise up.
  – Formation of white mist: **The inlet valve is not tight!**
- **Depressurize the plant!**
- **Check the inlet valve and repair it!**
- **Check tightness again**

Formation of white mist --> t**he inlet valve is not tight!**

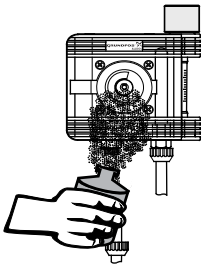

Fig. 7 Ammonia + chlorine gas --> formation of white mist

No formation of white mist --> the inlet valve is tight!

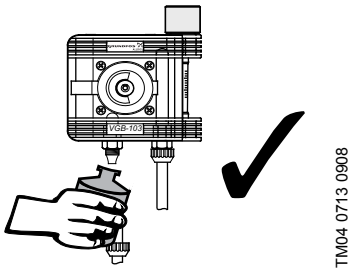

Fig. 8 No chlorine gas --> no formation of white mist

5. Maintenance

Rates for cleaning and maintenance:

- at least every 12 months
- in case of malfunction

Warning
Switch off the whole plant before doing cleaning and maintenance work!
Danger of gas break-out!

Warning
Before re-starting, check the tightness!
Danger of gas break-out!

5.1 Possible faults

Fault	Cause	Correction
Gas leakage at the pressure connection.	The sealing surface at the pressure connection of the device is damaged.	If necessary, replace the inlet valve.
	The gasket at the pressure connection is damaged.	Replace the gasket.
	Sealingsurfaces are dirty, there are rests of old gaskets on the sealing surfaces.	Clean the sealing surfaces.
	The sealing surface at the connection of the gas cylinder is damaged.	Use a different gas cylinder.
	The pressure connection is loose.	Tighten the pressure connection.
Gas escapes at the overpressure line.	The inlet valve is soiled or damaged.	Clean the inlet valve, replace damaged parts.
	Re-liquefacted gas enters the inlet valve.	Reduce the extraction amount, ensure correct course of temperature.
Formation of ice on the gas cylinder.	The extraction amount per hours is higher than 1% of the contents of the gas cylinder, the system is too small.	Use a dosing system with more than one gas cylinders.
Desired dosing flow is not reached.	Wrong adjusting spindle (diameter too low).	Mount the correct adjusting spindle.
	Insufficient injector vacuum.	Check the injector, repair it if necessary. Observe the manual of the injector.
		Check the motive water pump, repair it if necessary.
		Check the dirt trap before the injector, clean it if necessary.
	Leakage in vacuum line between dosing unit and injector.	Eliminate the leackage.
	Vacuum line is dirty.	Replace the vacuum line.
	The valve of the gas cylinder is closed.	Open the valve of the gas cylinder.
	The gas cylinder is empty.	Replace the empty gas cylinder by a new one.
The ball in the measuring tube is caught.	Measuring tube and/or ball are soiled.	Clean the measuring tube and the ball.
Water in the measuring tube.	Non-return diaphragm of the injector is defective.	Repair the injector. Completely disassemble the dosing unit, clean it and dry it perfectly! Dry the vacuum line to the injector or replace it.

5.2 Cleaning the Inlet Valve

5.2.1 Required tools and accessories

- Hot water (ca. 40°C)
- Soft brush
- Crosstip screwdriver
- Screwdriver
- Cylindrical pin (Ø ca. 5 mm)

5.2.2 Procedure

- Unscrew the cover at the inlet side and take it off.

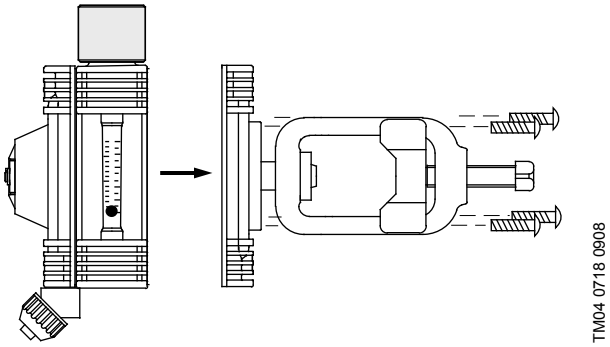

Fig. 9 Take off inlet valve

- Take out the filter and the gasket

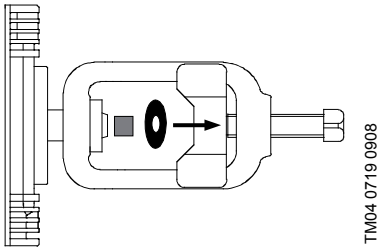

Fig. 10 Take off gasket and filter

- Unscrew the valve cone. Take out the screw part and the spring.
- Press out the valve seat with the cylindrical pin

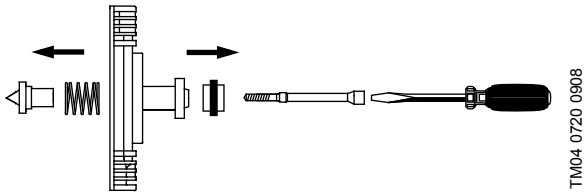

Fig. 11 Inlet valve demount

- Clean all parts with hot water, use brush if necessary.
- Replace damaged parts, if necessary. Especially to be observed:
  – The sealing surface of the valve cone may not be damaged.
  – The edges of the valve seat may not be damaged.
  – The spring may not show any corrossion.
- Dry all parts well

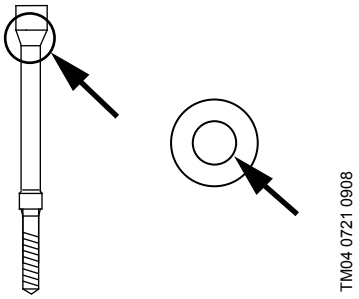

Fig. 12 Valve cone and valve seat

Caution ***Danger of corrosion when mounting moist parts!***

- Remount all parts in reverse sequence.
  – Screw the valve cone and the screw part fully together.
  – Observe fitting measurement

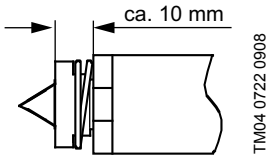

Fig. 13 Check the distance of mounting

5.3 Cleaning the measuring tube

5.3.1 Required tools and accessories

- Hot water (ca. 40°C)
- Soft brush
- Screwdriver with wide blade (8-10 mm)

5.3.2 Procedure

- Unscrew the cap.
- Unscrew the screw part.
- Take out the O-rings.
- Take out the measuring tube.
- Take of the plugs of the measuring tube and take out the ball.
- Clean all parts with hot water, use brush if necessary.
- Replace damaged parts, if necessary.
- Dry all parts well

Caution ***Danger of corrosion when mounting moist parts!***

- Remount all parts in reverse sequence

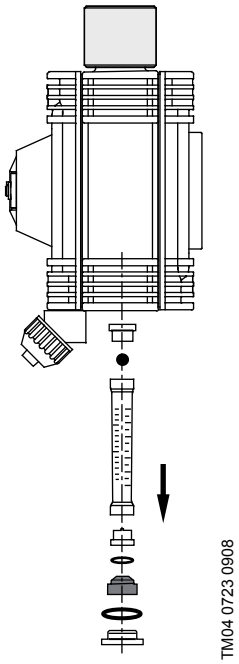

Fig. 14 Cleaning measuring tube

5.4 Cleaning the rate valve

5.4.1 Required tools and accessories

- Hot water (ca. 40°C)
- Soft brush
- Special tool 91835362 (48.541)
- Cylindrical pin (Ø ca. 5 mm)
- PTFE grease

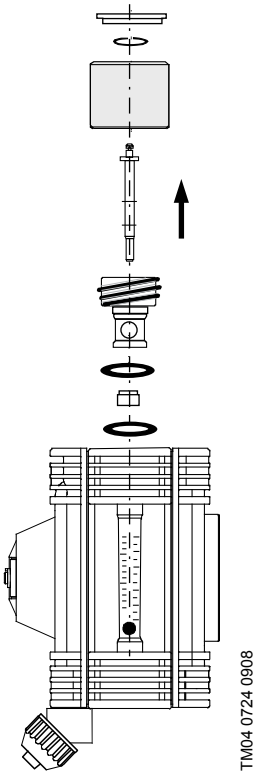

Fig. 15 Inlet valve mounted

5.4.2 Procedure

- Unscrew the adjustment knob.
- Unscrew the rate valve cartridge.
- Take out the flat gasket

Caution ***Do not damage the sealing edge of the valve seat!***

- Remove the O-ring of the rate valve cartridge.
- Press out the seat with the cylindrical pin.
- Take off the cap of the adjustment knob.
- Remove the locking ring and take out the spindle.
- Remove the O-rings of the spindle.
- Clean all parts with hot water, use brush if necessary
- Replace damaged parts, if necessary.
- Dry all parts well

Caution ***Danger of corrosion when mounting moist parts!***

- Replace the flat gasket by a new one

Caution ***No grease must get into the longitudinal groove of the spindle!***

- Replace the O-rings of the spindle by new ones, slightly apply Teflon grease to them.
- Replace the O-ring of the rate valve cartridge.
- Remount all parts in reverse sequence.
  – Observe fitting position of the valve seat

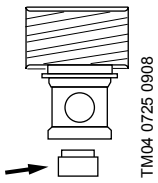

Fig. 16 Observe fitting position of the valve seat

5.5 Cleaning the vacuum regulator

5.5.1 Required tools and accessories

- Hot water (ca. 40°C)
- Soft brush
- Crosstip screwdriver

5.5.2 Procedure

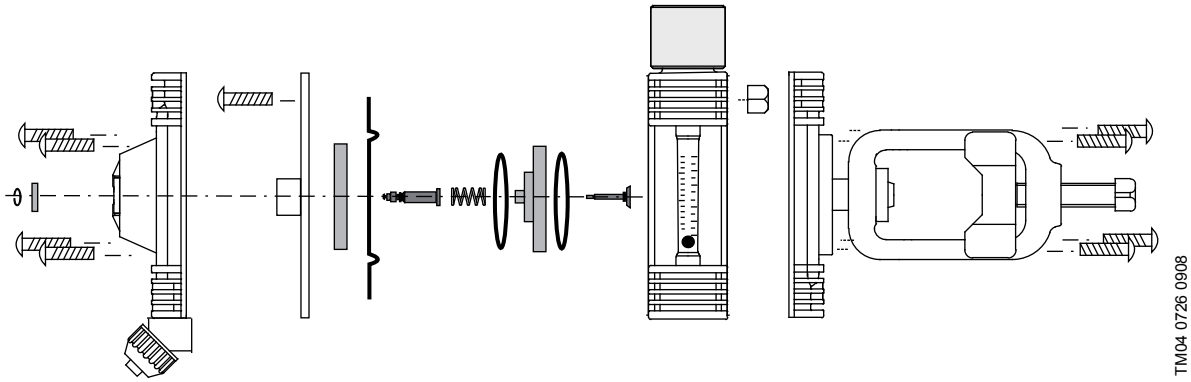

Fig. 17 Vacuum regulator mounted

- Remove the locking ring and take off the disk of the empty indication.
- Unscrew both covers.
- Unscrew the inner cover.
- Take out the diaphragm disk and unscrew it.
- Clean all parts with hot water, use brush if necessary
- Replace damaged parts, if necessary.
- Dry all parts well

Caution ***Danger of corrosion when mounting moist parts!***

- Replace O-rings by new ones.
- Remount all parts in reverse sequence.
  – Check the function of the overpressure valve

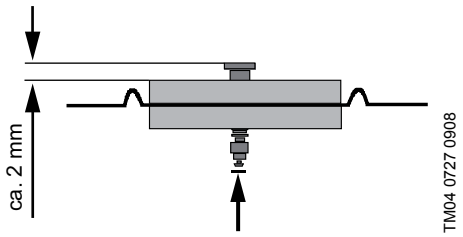

Fig. 18 Checking size overpressure valve

– Observe the fitting position of the diaphragm

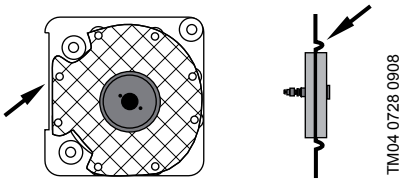

Fig. 19 Fitting position of the diagraphm

6. Spare Parts

Items without an asterisk mentioned in the drawings fig. 20, 21, 22, 24 and 24 are parts of the spare part set. Items with one asterisk are part of the gasket set and items with two asterisks have a separate order number.

- We suggest to store some spare parts sets to ensure fast replacing of wearing parts, if necessary

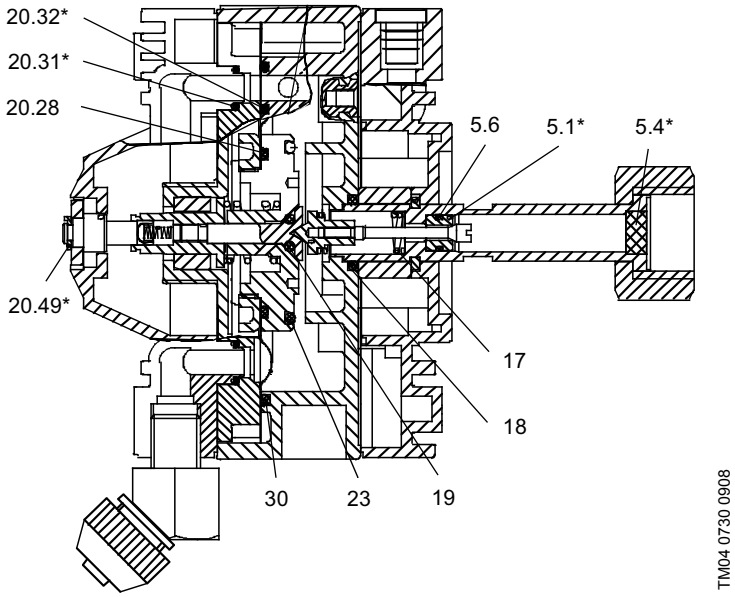

Fig. 20 Sectional drawing compact dosing vaccuperm VGB-103

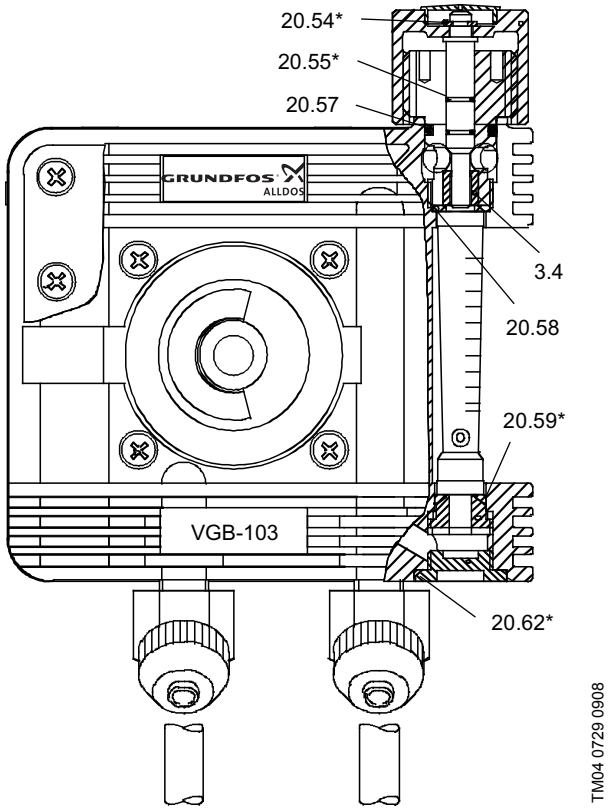

Fig. 21 Partial sectional drawing flow meter

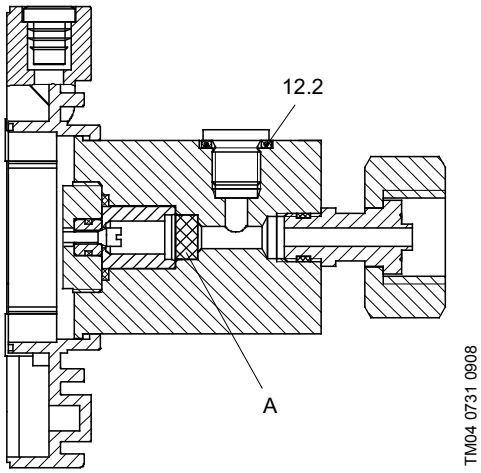

Fig. 22 Sectional drawing inlet valve, internal filter (A)

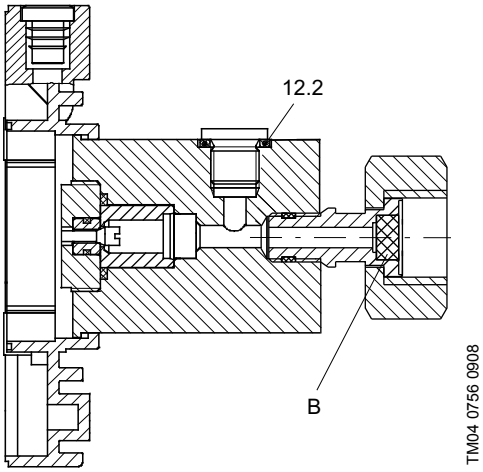

Fig. 23 Sectional drawing inlet valve, external filter (B)

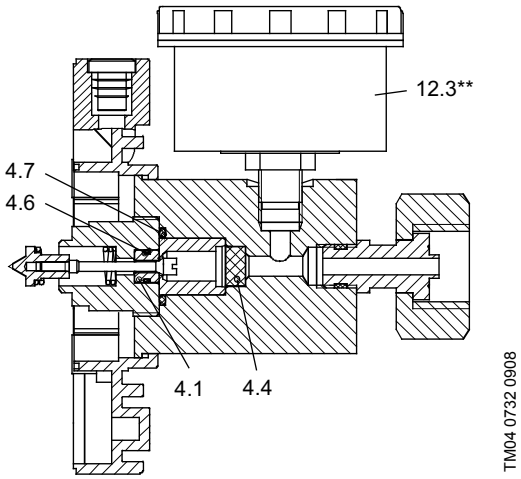

Fig. 24 Sectional drawing inlet valve with manometer

Item(s)	Description	Oder no.
without asterisk	parts of the spare part set	91835975 (553-603)
marked by *	Parts of the gasket set	96681019 (12.5354)
12.3**	Pressure gauge (0-16 bar)	91834683 (12.2519)

Argentina
Bombas GRUNDFOS de Argentina S.A.
Ruta Panamericana km. 37.500 Lote 34A
1619 - Garin
Pcia. de Buenos Aires
Phone: +54-3327 414 444
Telefax: +54-3327 411 111

Australia
Grundfos Alldos
Dosing & Disinfection
ALLDOS Oceania Pty. Ltd.
Unit 3 / 74 Murdoch Circuit
Acacia Ridge QLD 4100
Phone: +61 (0)7 3712 6888
Telefax: +61 (0)7 3272 5188
E-mail: alldos.au@alldos.com

Australia
GRUNDFOS Pumps Pty. Ltd.
P.O. Box 2040
Regency Park
South Australia 5942
Phone: +61-8-8461-4611
Telefax: +61-8-8340 0155

Austria
GRUNDFOS Pumpen Vertrieb Ges.m.b.H.
Grundfosstraße 2
A-5082 Grödig/Salzburg
Tel.: +43-6246-883-0
Telefax: +43-6246-883-30

Belgium
N.V. GRUNDFOS Bellux S.A.
Boomsesteenweg 81-83
B-2630 Aartselaar
Tél.: +32-3-870 7300
Télécopie: +32-3-870 7301

Belorussia
Представительство ГРУНДФОС в Минске
220123, Минск,
ул. В. Хоружей, 22, оф. 1105
Телефон: (37517) 233-97-65
Факс: (37517) 233-97-69

Bosnia/Herzegovina
GRUNDFOS Sarajevo
Paromlinska br. 16,
BiH-71000 Sarajevo
Phone: +387 33 713290
Telefax: +387 33 231795

Brazil
Mark GRUNDFOS Ltda.
Av. Humberto de Alencar Castelo Branco, 630
CEP 09850 - 300
São Bernardo do Campo - SP
Phone: +55-11 4393 5533
Telefax: +55-11 4343 5015

Bulgaria
GRUNDFOS Pumpen Vertrieb
Representative Office - Bulgaria
Bulgaria, 1421 Sofia
Lozenetz District
105-107 Arsenalski blvd.
Phone: +359 2963 3820, 2963 5653
Telefax: +359 2963 1305

Canada
GRUNDFOS Canada Inc.
2941 Brighton Road
Oakville, Ontario
L6H 6C9
Phone: +1-905 829 9533
Telefax: +1-905 829 9512

China
Grundfos Alldos
Dosing & Disinfection
ALLDOS (Shanghai) Water Technology Co. Ltd.
West Unit, 1 Floor, No. 2 Building (T 4-2)
278 Jinhu Road, Jin Qiao Export Processing Zone
Pudong New Area
Shanghai, 201206
Phone: +86 21 5055 1012
Telefax: +86 21 5032 0596
E-mail: alldos.cn@alldos.com

China
GRUNDFOS Pumps (Shanghai) Co. Ltd.
22 Floor, Xin Hua Lian Building
755-775 Huai Hai Rd, (M)
Shanghai 200020
PRC
Phone: +86-512-67 61 11 80
Telefax: +86-512-67 61 81 67

Croatia
GRUNDFOS predstavništvo Zagreb
Cebini 37, Buzin
HR-10010 Zagreb
Phone: +385 1 6595 400
Telefax: +385 1 6595 499

Czech Republic
GRUNDFOS s.r.o.
Čapkovského 21
779 00 Olomouc
Phone: +420-585-716 111
Telefax: +420-585-716 299

Denmark
GRUNDFOS DK A/S
Martin Bachs Vej 3
DK-8850 Bjerringbro
Tlf.: +45-87 50 50 50
Telefax: +45-87 50 51 51
E-mail: info_GDK@grundfos.com
www.grundfos.com/DK

Estonia
GRUNDFOS Pumps Eesti OÜ
Peterburi tee 92G
11415 Tallinn
Tel: + 372 606 1690
Fax: + 372 606 1691

Finland
OY GRUNDFOS Pumput AB
Mestarintie 11
FIN-01730 Vantaa
Phone: +358-3066 5650
Telefax: +358-3066 56550

France
Grundfos Alldos
Dosing & Disinfection
ALLDOS S.A.R.L.
7, rue Gutenberg
F-67610 La Wantzenau
Tél.: +33-3 88 59 26 26
Télécopie: +33-3 88 59 26 00
E-mail : alldos.fr@alldos.com

France
Pompes GRUNDFOS Distribution S.A.
Parc d'Activités de Chesnes
57, rue de Malacombe
F-38290 St. Quentin Fallavier (Lyon)
Tél.: +33-4 74 82 15 15
Télécopie: +33-4 74 94 10 51

Germany
Grundfos Alldos
Dosing & Disinfection
ALLDOS Eichler GmbH
Reetzstraße 85
D-76327 Pfinztal (Söllingen)
Tel.: +49 7240 61-0
Telefax: +49 7240 61-177
E-mail: alldos.de@alldos.com

Germany
GRUNDFOS GMBH
Schlüterstr. 33
D-40699 Erkrath
Tel.: +49-(0) 211 929 69-0
Telefax: +49-(0) 211 929 69-3799
E-mail: infoservice@grundfos.de
Service in Deutschland:
E-mail: kundendienst@grundfos.de

Greece
GRUNDFOS Hellas A.E.B.E.
20th km. Athinon-Markopoulou Av.
P.O. Box 71
GR-19002 Peania
Phone: +0030-210-66 83 400
Telefax: +0030-210-66 46 273

Hong Kong
GRUNDFOS Pumps (Hong Kong) Ltd.
Unit 1, Ground floor
Siu Wai Industrial Centre
29-33 Wing Hong Street &
68 King Lam Street, Cheung Sha Wan
Kowloon
Phone: +852-27861706 / 27861741
Telefax: +852-27858664

Hungary
GRUNDFOS Hungária Kft.
Park u. 8
H-2045 Törökbálint,
Phone: +36-23 511 110
Telefax: +36-23 511 111

India
GRUNDFOS Pumps India Private Limited
118 Old Mahabalipuram Road
Thoraipakkam
Chennai 600 096
Phone: +91-44 2496 6800

Indonesia
PT GRUNDFOS Pompa
Jl. Rawa Sumur III, Blok III / CC-1
Kawasan Industri, Pulogadung
Jakarta 13930
Phone: +62-21-460 6909
Telefax: +62-21-460 6910 / 460 6901

Ireland
GRUNDFOS (Ireland) Ltd.
Unit A, Merrywell Business Park
Ballymount Road Lower
Dublin 12
Phone: +353-1-4089 800
Telefax: +353-1-4089 830

Italy
GRUNDFOS Pompe Italia S.r.l.
Via Gran Sasso 4
I-20060 Truccazzano (Milano)
Tel.: +39-02-95838112
Telefax: +39-02-95309290 / 95838461

Japan
GRUNDFOS Pumps K.K.
Gotanda Metalion Bldg. 5F,
5-21-15, Higashi-gotanda
Shiagawa-ku, Tokyo,
141-0022 Japan
Phone: +81 35 448 1391
Telefax: +81 35 448 9619

Korea
GRUNDFOS Pumps Korea Ltd.
6th Floor, Aju Building 679-5
Yeoksam-dong, Kangnam-ku, 135-916
Seoul, Korea
Phone: +82-2-5317 600
Telefax: +82-2-5633 725

Latvia
SIA GRUNDFOS Pumps Latvia
Deglava biznesa centrs
Augusta Deglava ielā 60, LV-1035, Rīga,
Tālr.: + 371 714 9640, 7 149 641
Fakss: + 371 914 9646

Lithuania
GRUNDFOS Pumps UAB
Smolensko g. 6
LT-03201 Vilnius
Tel: + 370 52 395 430
Fax: + 370 52 395 431

Malaysia
GRUNDFOS Pumps Sdn. Bhd.
7 Jalan Peguam U1/25
Glenmarie Industrial Park
40150 Shah Alam
Selangor
Phone: +60-3-5569 2922
Telefax: +60-3-5569 2866

México
Bombas GRUNDFOS de México S.A. de C.V.
Boulevard TLC No. 15
Parque Industrial Stiva Aeropuerto
Apodaca, N.L. 66600
Phone: +52-81-8144 4000
Telefax: +52-81-8144 4010

Netherlands
Grundfos Alldos
Dosing & Disinfection
ALLDOS BV
Leerlooiersstraat 6
NL-8601 WK Sneek
Tel.: +31-51 54 25 789
Telefax: +31-51 54 30 550
E-mail: alldos.nl@alldos.com

Netherlands
GRUNDFOS Netherlands
Veluwezoom 35
1326 AE Almere
Postbus 22015
1302 CA ALMERE
Tel.: +31-88-478 6336
Telefax: +31-88-478 6332
e-mail: info_gnl@grundfos.com

New Zealand
GRUNDFOS Pumps NZ Ltd.
17 Beatrice Tinsley Crescent
North Harbour Industrial Estate
Albany, Auckland
Phone: +64-9-415 3240
Telefax: +64-9-415 3250

Norway
GRUNDFOS Pumper A/S
Strømsveien 344
Postboks 235, Leirdal
N-1011 Oslo
Tlf.: +47-22 90 47 00
Telefax: +47-22 32 21 50

Poland
GRUNDFOS Pompy Sp. z o.o.
ul. Klonowa 23
Baranowo k. Poznania
PL-62-081 Przeźmierowo
Tel: (+48-61) 650 13 00
Fax: (+48-61) 650 13 50

Portugal
Bombas GRUNDFOS Portugal, S.A.
Rua Calvet de Magalhães, 241
Apartado 1079
P-2770-153 Paço de Arcos
Tel.: +351-21-440 76 00
Telefax: +351-21-440 76 90

România
GRUNDFOS Pompe România SRL
Bd. Biruintei, nr 103
Pantelimon county Ilfov
Phone: +40 21 200 4100
Telefax: +40 21 200 4101
E-mail: romania@grundfos.ro

Russia
ООО Грундфос
Россия, 109544 Москва, ул. Школьная 39
Тел. (+7) 495 737 30 00, 564 88 00
Факс (+7) 495 737 75 36, 564 88 11
E-mail grundfos.moscow@grundfos.com

Serbia
GRUNDFOS Predstavništvo Beograd
Dr. Milutina Ivkovića 2a/29
YU-11000 Beograd
Phone: +381 11 26 47 877 / 11 26 47 496
Telefax: +381 11 26 48 340

Singapore
GRUNDFOS (Singapore) Pte. Ltd.
24 Tuas West Road
Jurong Town
Singapore 638381
Phone: +65-6865 1222
Telefax: +65-6861 8402

Slovenia
GRUNDFOS PUMPEN VERTRIEB
Ges.m.b.H.,
Podružnica Ljubljana
Blatnica 1, SI-1236 Trzin
Phone: +386 01 568 0610
Telefax: +386 01 568 0619
E-mail: slovenia@grundfos.si

South Africa
Grundfos Alldos
Dosing & Disinfection
ALLDOS (Pty) LTD
98 Matroosberg Road, Waterkloof Park
P.O. Box 36505, Menlo Park 0102
0181 ZA Pretoria
E-mail: alldos.za@alldos.com

Spain
Bombas GRUNDFOS España S.A.
Camino de la Fuentecilla, s/n
E-28110 Algete (Madrid)
Tel.: +34-91-848 8800
Telefax: +34-91-628 0465

Sweden
GRUNDFOS AB
(Box 333) Lunnagårdsgatan 6
431 24 Mölndal
Tel.: +46(0)771-32 23 00
Telefax: +46(0)31-331 94 60

Switzerland
Grundfos Alldos
Dosing & Disinfection
ALLDOS International AG
Schönmattstraße 4
CH-4153 Reinach
Tel.: +41-61-717 5555
Telefax: +41-61-717 5500
E-mail: alldos.ch@alldos.com

Switzerland
GRUNDFOS Pumpen AG
Bruggacherstrasse 10
CH-8117 Fällanden/ZH
Tel.: +41-1-806 8111
Telefax: +41-1-806 8115

Taiwan
GRUNDFOS Pumps (Taiwan) Ltd.
7 Floor, 219 Min-Chuan Road
Taichung, Taiwan, R.O.C.
Phone: +886-4-2305 0868
Telefax: +886-4-2305 0878

Thailand
GRUNDFOS (Thailand) Ltd.
92 Chaloem Phrakiat Rama 9 Road,
Dokmai, Pravej, Bangkok 10250
Phone: +66-2-725 8999
Telefax: +66-2-725 8998

Turkey
GRUNDFOS POMPA San. ve Tic. Ltd. Sti.
Gebze Organize Sanayi Bölgesi
Ihsan dede Caddesi,
2. yol 200. Sokak No. 204
41490 Gebze/ Kocaeli
Phone: +90 - 262-679 7979
Telefax: +90 - 262-679 7905
E-mail: satis@grundfos.com

Ukraine
ТОВ ГРУНДФОС УКРАЇНА
01010 Київ, Вул. Московська 8б,
Тел.:(+38 044) 390 40 50
Фах.: (+38 044) 390 40 59
E-mail: ukraine@grundfos.com

United Arab Emirates
GRUNDFOS Gulf Distribution
P.O. Box 16768
Jebel Ali Free Zone
Dubai
Phone: +971-4- 8815 166
Telefax: +971-4-8815 136

United Kingdom
Grundfos Alldos
Dosing & Disinfection
ALLDOS Ltd.
39 Gravelly Industrial Park, Tyburn Road
Birmingham B24 8TG
Phone: +44-121-3283336
Telefax: +44-121-3284332
E-mail: alldos.uk@alldos.com

United Kingdom
GRUNDFOS Pumps Ltd.
Grovebury Road
Leighton Buzzard/Beds. LU7 8TL
Phone: +44-1525-850000
Telefax: +44-1525-850011

U.S.A.
GRUNDFOS Pumps Corporation
17100 West 118th Terrace
Olathe, Kansas 66061
Phone: +1-913-227-3400
Telefax: +1-913-227-3500

Usbekistan
Представительство ГРУНДФОС в Ташкенте
700000 Ташкент ул.Усмана Носира 1-й тупик 5
Телефон: (3712) 55-68-15
Факс: (3712) 53-36-35

Addresses revised 18.12.2008

15.710221 V1.0		**95 713933** 0209		**GB**
Repl.	15.710091 V. 1.0 15.710001 V. 1.0	Repl.	96 681349 1104 96 681297 1004	

GRUNDFOS ALLDOS