Installation and operating instructions

UNILIFT KP 150, KP 250, KP 350

UNILIFT KP 150, KP 250, KP 350
Installation and operating instructions
Other languages
http://net.grundfos.com/qr/i/96894217

GRUNDFOS

UNILIFT KP 150, KP 250, KP 350

English (GB)

Installation and operating instructions 4
Appendix A. 22

Original installation and operating instructions

Table of contents

1. General information 4
1.1 Hazard statements 4
1.2 Notes 5

2. Receiving the product. 5
2.1 Inspecting the product 5

3. Installing the product 5
3.1 Location 5
3.2 Mechanical installation 6
3.3 Electrical connection 9

4. Starting up the product 11
4.1 UNILIFT KP-A. 11
4.2 UNILIFT KP-AV, KP-AW 11
4.3 UNILIFT KP-M 11

5. Product introduction 11
5.1 Intended use 12
5.2 Pumped liquids 12
5.3 Identification. 13

6. Servicing the product 14
6.1 Maintaining the product. 14
6.2 Cleaning the pump 14
6.3 Service kits 16
6.4 Contaminated pumps 17

7. Fault finding the product 18

8. Technical data 20
8.1 Storage temperature 20
8.2 Operating conditions 20
8.3 Sound pressure level 20

9. Disposing of the product 20

1. General information

This appliance shall not be used by children.

Children shall not play with the appliance.

Cleaning and user maintenance shall not be carried out by children.

Appliances can be used by persons with reduced physical, sensory, or mental capabilities, as well as persons with a lack of experience and knowledge. This requires that they are given supervision or instruction concerning the use of the appliance in a safe way and that they understand the hazards involved.

Read this document before you install the product. Installation and operation must comply with local regulations and accepted codes of good practice.

1.1 Hazard statements

The symbols and hazard statements below may appear in Grundfos installation and operating instructions, safety instructions and service instructions.

DANGER

Indicates a hazardous situation which, if not avoided, will result in death or serious personal injury.

WARNING

Indicates a hazardous situation which, if not avoided, could result in death or serious personal injury.

CAUTION

Indicates a hazardous situation which, if not avoided, could result in minor or moderate personal injury.

The hazard statements are structured in the following way:

SIGNAL WORD

Description of the hazard

Consequence of ignoring the warning

- Action to avoid the hazard.

1.2 Notes

The symbols and notes below may appear in Grundfos installation and operating instructions, safety instructions and service instructions.

Observe these instructions for explosion-proof products.

A blue or gray circle with a white graphical symbol indicates that an action must be taken.

A red or gray circle with a diagonal bar, possibly with a black graphical symbol, indicates that an action must not be taken or must be stopped.

If these instructions are not observed, it may result in malfunction or damage to the equipment.

Tips and advice that make the work easier.

2. Receiving the product

WARNING
Falling objects
Death or serious personal injury

- Keep the product in a stable position during unpacking.
- Wear personal protective equipment.

2.1 Inspecting the product

Check that the product received is in accordance with the order.

Check that the voltage and frequency of the product match voltage and frequency of the installation site.

3. Installing the product

CAUTION
Toxic material
Minor or moderate personal injury

- The product will be classified as contaminated if used for a liquid which is injurious to health or toxic.
- Wear personal protective equipment.

Installation must be carried out by specially trained persons and according to local regulations.

According to EN 60335-2-41/A2:2010, this product with 5 m of mains cable may be used only for indoor applications.

A product that is not indicated to be protected against freezing shall not be left outside in freezing weather conditions.

3.1 Location

Always have at least 3 m free cable above liquid level. This limits the installation depth to 7 m for pumps with 10 m cable and to 2 m for pumps with 5 m cable.

3.1.1 Minimum space for UNILIFT KP-A

The pit, basin or tank must be sized according to the relation between the water flow to the pit, basin or tank and the pump performance.

When the pump is installed in a permanent installation with a float switch, the minimum dimensions of the pit, basin or tank must be as indicated below to ensure free movability of the float switch. The float switch is set to the minimum free cable length.

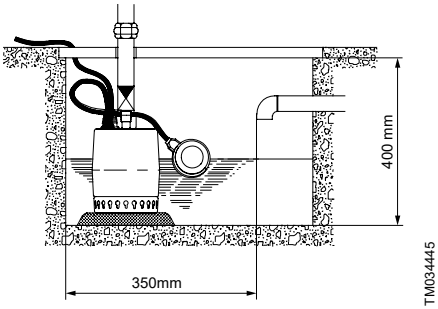

Minimum installation dimensions, UNILIFT KP-A

Related information

3.2.5 Start and stop levels

3.1.2 Minimum space for UNILIFT KP-AV, KP-AW

For pumps with a vertical level switch, the minimum installation dimensions of the pit, basin or tank must be as shown in below figures.

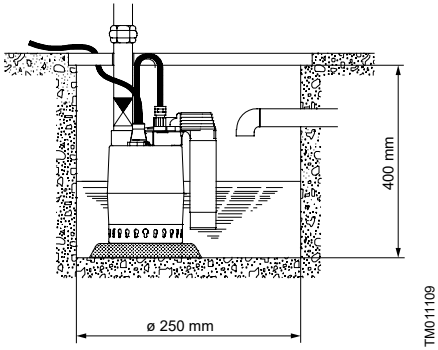

Minimum installation dimensions, UNILIFT KP-AV

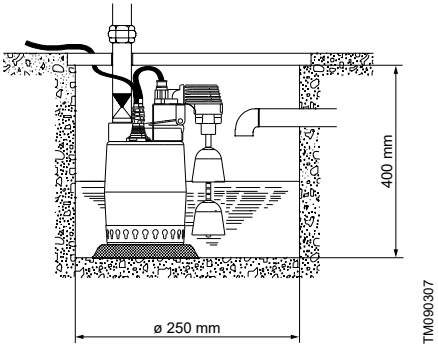

Minimum installation dimensions, UNILIFT KP-AW

3.1.3 Minimum space for UNILIFT KP-M

The pump requires no more space than the physical dimensions of the pump.

3.2 Mechanical installation

DANGER
Electric shock
Death or serious personal injury

- Switch off the power supply before starting any work on the product.
- Make sure that the power supply cannot be accidentally switched on.

CAUTION
Sharp element
Minor or moderate personal injury

- Wear personal protective equipment.
- Make sure that persons cannot come into contact with the pump impeller.

Do not install the pump hanging from the electric cable or the outlet pipe.

3.2.1 Foundation

Place the pump on a plate or on bricks so that the inlet strainer is free of sludge, mud or similar materials.

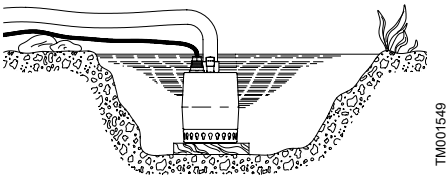

Pump placed on a plate

3.2.2 Lifting the pump

Do not pull or lift the product by the power cable.

Lift the pump using the pump handle. Do not lift the pump by the power cable or by the outlet pipe or hose.

If the pump is installed in a well or tank, lower and lift it by means of a wire or chain fastened to the pump handle.

3.2.3 Positioning the pump

UNILIFT KP-A and UNILIFT KP-M can be used in vertical position with the outlet pointing upwards. The pumps may also be used in horizontal or tilted position with the outlet as the highest point.

During operation, the inlet strainer must always be completely covered by the pumped liquid.

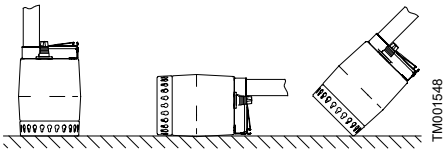

How to position UNILIFT KP-A and UNILIFT KP-M

Always place UNILIFT KP-AV, KP-AW in vertical position.

When the pipe or hose has been connected, place the pump in its operating position.

Position the pump so that the pump inlet will not be blocked or partly blocked by sludge, mud or similar materials.

In the case of permanent installation, the pit must be cleared of obstruction, such as sludge and pebbles, before the pump is installed.

3.2.4 Pipe connection

Fit the outlet pipe or hose in the Rp 1 1/4 outlet. Steel pipes can be screwed directly into the pump outlet.

In a permanent installation, fit a union to the outlet pipe to facilitate mounting and removal. If a hose is used, fit a hose union.

In a permanent installation with a level switch, fit a non-return valve to the outlet pipe or hose.

3.2.5 Start and stop levels

UNILIFT KP-A

For pumps supplied with a float switch, the difference in level between start and stop can be adjusted by changing the free cable length between the float switch and the pump handle.

- An increased free cable length results in fewer starts and stops and a large difference in level.
- A reduced free cable length results in more frequent starts and stops and a small difference in level.

The stop level must be above the pump inlet to prevent the pump from taking in air.

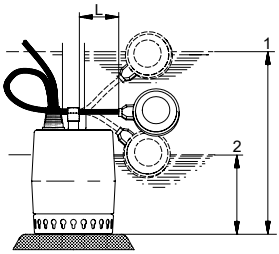

Start and stop levels, UNILIFT KP-A

Pump type	Minimum cable length (L): 70 mm		Maximum cable length (L): 150 mm	
	1: Start [mm]	2: Stop [mm]	1: Start [mm]	2: Stop [mm]
KP 150 A KP 250 A	290	140	335	100
KP 350 A	300	150	345	110

UNILIFT KP-AV

The level difference for pumps with a vertical level switch cannot be adjusted.

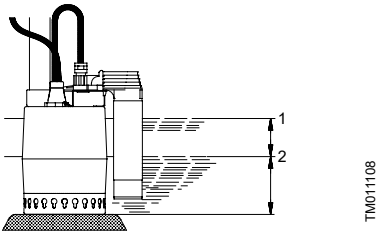

Start and stop levels, UNILIFT KP-AV

Pump type	1: Start mm	2: Stop mm
KP 150 AV KP 250 AV	180	100
KP 350 AV	190	110

UNILIFT KP-AW

The level difference between start and stop can be adjusted by sliding the two bells along the cylindrical guide. Rotate the bells for easier adjustment.

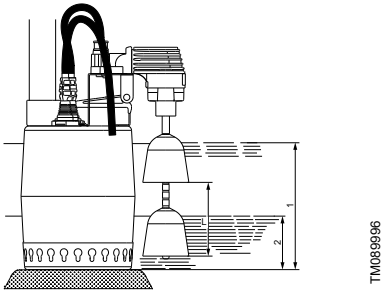

Pump type	Minimum bell distance 65 mm		Maximum bell distance 105 mm	
	1: Start [mm]	2: Stop [mm]	1: Start [mm]	2: Stop [mm]
KP 150 AW KP 250 AW	155	115	155	75
KP 350 AW	165	125	165	85

3.3 Electrical connection

DANGER
Electric shock
Death or serious personal injury

- Switch off the power supply before you start any work on the product.
- Make sure that the power supply cannot be switched on accidentally.

DANGER
Electric shock
Death or serious personal injury

- The installation must be fitted with a residual-current device (RCD) with a tripping current less than 30 mA.

DANGER
Electric shock
Death or serious personal injury

- Make sure that the power supply plug delivered with the product is in compliance with local regulations.
- The plug must have the same protective earth (PE) connection system as the power outlet. If not, use a suitable adapter if allowed by local regulations.

DANGER
Electric shock
Death or serious personal injury

- Power cables without a plug must be connected to a supply disconnecting device incorporated in the fixed wiring according to the local wiring rules.
- If the power cable is damaged, it must be replaced by the manufacturer, the manufacturer's service partner or a similarly qualified person.

All electrical connections must be carried out by a qualified person in accordance with local regulations.

Depending on local regulations, a pump with minimum 10 m of mains cable must be used if the pump is used as a portable pump for different applications.

Make sure that the product is suitable for the supply voltage and frequency available at the installation site. Voltage and frequency are marked on the pump nameplate.

The pump must be connected to an external main switch. If the pump is not installed close to the switch, the switch must be of a lockable type.

Three-phase pumps must be connected to an external motor-protective circuit breaker. The rated current of the motor-protective circuit breaker must correspond to the electrical data marked on the pump nameplate.

If a level switch is connected to a three-phase pump, the motor-protective circuit breaker must be magnetically operated.

Single-phase and three-phase pumps incorporate thermal overload protection and require no additional motor protection. Except for UNILIFT KP 350, 3 × 200 V, 50 Hz, which must be connected to a motor-protective circuit breaker.

If the motor is overloaded, it will stop automatically. When the motor has cooled to normal temperature, it restarts automatically.

Three-phase pumps with a float switch, UNILIFT KP-A, must be connected to the mains supply by means of a contactor. See the figure below.

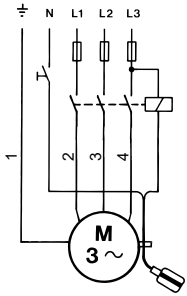

TM002011

Wiring diagram

Pos.	Description
1	Yellow and green
2	Grey
3	Brown
4	Black

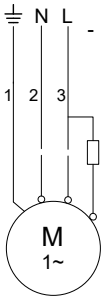

TM1040337

Wiring diagram

Pos.	Description
1	Yellow and green
2	Blue
3	Brown

3.3.1 Checking the direction of rotation

Three-phase pumps only

Check the direction of rotation every time the pump is connected to a new installation.

1. Place the pump on a plane surface.
2. Start and stop the pump.
3. Observe the pump when started. If the pump gives a slight clockwise jerk, the direction of rotation of the motor is correct. If the jerk is counterclockwise, interchange two phases in the mains connection.

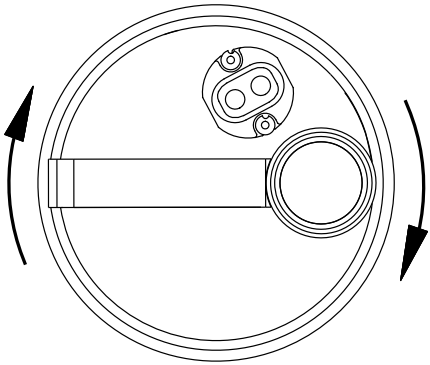

TM034482

Direction of rotation

If the pump is connected to a pipe system, check the direction of rotation in this way:

1. Start the pump and check the quantity of water.
2. Stop the pump and interchange two phases in the mains connection.
3. Start the pump and check the quantity of water.
4. Stop the pump.
5. Compare the results taken under points 1 and 3. The largest quantity of water indicates the correct direction of rotation.

4. Starting up the product

DANGER
Electric shock
Death or serious personal injury
- Do not use the pump in swimming pools, garden ponds or similar places if there are people in the water.

The pump may be run briefly to check the direction of rotation without being submerged in the pumped liquid.

1. Before starting the pump, check that the inlet strainer is fitted to the pump and submerged in the pumped liquid.
2. Open the isolating valve, if fitted, and check the level switch setting.

4.1 UNILIFT KP-A

The pump starts and stops automatically depending on the liquid level and the cable length of the float switch.

Forced operation

If the pump is used for draining liquid below the stop level of the float switch, the float switch can be held in a higher position by fastening it to the outlet pipe.

During forced operation, check the liquid level regularly to avoid dry running.

4.2 UNILIFT KP-AV, KP-AW

The pump starts and stops automatically depending on the liquid level.

4.3 UNILIFT KP-M

The pump is started and stopped via an external switch.

To avoid dry running, check the liquid level regularly during operation, for instance via external level monitoring.

To enable the pump to self-prime during startup, the liquid level must be at least 30 mm.

The pump can pump down to a liquid level of 15 mm.

5. Product introduction

Grundfos UNILIFT KP pumps are available in these versions:

UNILIFT KP-A	Automatic start/stop operation via a float switch.
UNILIFT KP-AV	Automatic start/stop operation via a vertical level switch. The product is intended for clean water.
UNILIFT KP-AW	Automatic start/stop operation via a vertical level switch. The product is intended for dirty water.
UNILIFT KP-M	Manual operation via an external on/off switch, without a level switch.

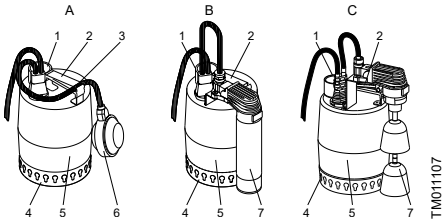

Pumps with a level switch

Pos.	Description
A	UNILIFT KP-A with float switch
B	UNILIFT KP-AV with vertical level switch
C	UNILIFT KP-AW with vertical level switch
1	Outlet, Rp 1 1/4
2	Handle
3	Cable clamp
4	Inlet strainer
5	Pump sleeve
6	Float switch
7	Vertical level switch

5.1 Intended use

The Grundfos UNILIFT KP pump is a single-stage submersible pump designed for pumping grey wastewater, for example, wastewater from showers, sinks and washing machines.

The pump is capable of pumping water which contains a limited quantity of solids, however not stones and similar materials, without being blocked or damaged.

The pump is available for automatic as well as manual operation and can be installed in a permanent installation or used as a portable pump.

Applications	KP 150	KP 250	KP 350
Drainage of flooded cellars or buildings	•	•	•
Groundwater lowering	•	•	•
Pumping of water from drain water collecting tanks and pits	•	•	•
Pumping of water from surface water tanks and pits with inflow from, for example, roof gutters, shafts and tunnels.	•	•	•
Emptying and filling of, for example, swimming pools, ponds and tanks.	•	•	•
Pumping of wastewater from, for example, washing machines, baths and sinks from cellars up to sewer level	•	•	•

Incorrect application of the pump and wear are not covered by the warranty.

5.2 Pumped liquids

The pump is capable of pumping wastewater containing a limited quantity of spherical particles. Pumping of spherical particles exceeding the maximum particle size for the pump may block or damage the pump.

Maximum spherical diameter of particle is 10 mm.

The pump is not suitable for these liquids:

- sewage
- liquids containing long fibres
- flammable liquids (oil, petrol, etc.)
- aggressive liquids
- liquids containing solids exceeding the recommended maximum particle size of the pump.

! The pump contains approximately 70 ml of non-toxic motor liquid which will be mixed with the pumped liquid in case of a leak.

Related information

8.1 Storage temperature

5.3 Identification

5.3.1 Nameplate

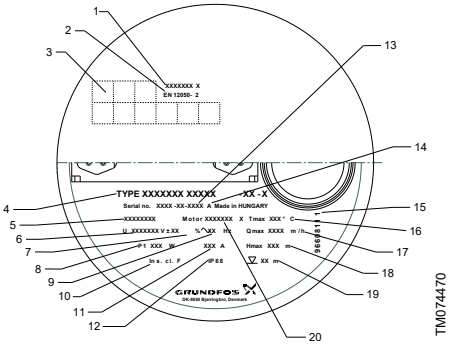

Nameplate example

Pos.	Description
1	ID number for safety instruction
2	ID number for EN standards
3	Approvals
4	Product type
5	Product number
6	Supply voltage [V]
7	Voltage tolerance [%]
8	Power input [W]
9	Frequency [Hz]
10	Insulation class
11	Max. current [A]
12	Enclosure class
13	Factory code and production code (year and week)
14	Model
15	Nameplate layout
16	Max. liquid temperature [°C]
17	Max. flow rate [m^3/h]
18	Max. head [m]
19	Max. installation depth [m]
20	Motor number

5.3.2 Type key

Example: UNILIFT KP 150 A 1

Code	Explanation	Designation
UNILIFT KP	Type range	
150 250 350		Rated motor output, P_2 [W]
A	Automatic operation with float switch	Level control
AV	With vertical level switch, clean water (automatic operation)	
AW	With vertical level switch, dirty water (automatic operation)	
M	Manual operation without level switch	
1	Single-phase	Motor
3	Three-phase	

6. Servicing the product

DANGER
Electric shock
Death or serious personal injury
- Switch off the power supply before starting any work on the product.
- Make sure that the power supply cannot be accidentally switched on.

CAUTION
Sharp element
Minor or moderate personal injury
- Wear personal protective equipment.

CAUTION
Toxic material
Minor or moderate personal injury
- The product will be classified as contaminated if it has been used for a liquid which is injurious to health or toxic.
- Wear personal protective equipment.

CAUTION
Biological hazard
Minor or moderate personal injury
- Flush the product thoroughly with clean water and rinse the parts in water after dismantling.
- Wear personal protective equipment.

If the power cable or the level switch is damaged, it must be replaced by a service workshop authorised by Grundfos.

Service must be carried out by specially trained persons.
Furthermore, all rules and regulations covering safety, health and environment must be observed.

1. If the pump has been used for liquids other than clean water, flush the pump thoroughly with clean water before carrying out maintenance and service.
2. Rinse the pump parts in water after dismantling.

6.1 Maintaining the product

Under normal operating conditions, the pump is maintenance-free.

If the pump has been used for liquids other than clean water, flush it through with clean water immediately after use.

If the pump delivers too little water due to deposits or the like, dismantle and clean the pump.

The pump contains approx. 70 ml of non-toxic motor liquid which will be mixed with the pumped liquid in case of a leak.

6.2 Cleaning the pump

The inlet strainer and the pump housing can be dismantled by untrained persons.
Further dismantling of the pump must be carried out by a specially trained person.

If the pump delivers too little water due to deposits or the like, dismantle and clean the pump.

6.2.1 Cleaning the inlet strainer

1. Disconnect the power supply.
2. Drain the pump.
3. Carefully loosen the inlet strainer by inserting a screwdriver in the recess between the pump sleeve and the strainer. Use the screwdriver to push apart the outer casing and the strainer. Repeat the procedure, working around the pump, until the strainer is free and can be removed.

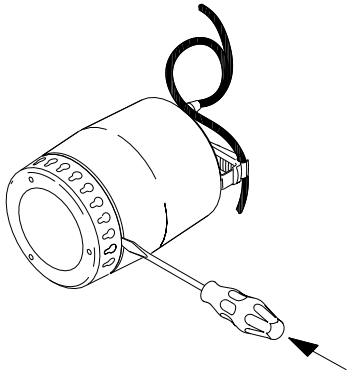

How to remove the inlet strainer

4. Remove the inlet strainer, clean and refit it.

6.2.2 Cleaning the inside of the pump

! Before and during the mounting of the pump housing, check that the sealing part is fitted correctly.

Moisten the sealing part with water to ease the fitting.

If the pump still delivers too little water, dismantle the pump further.

1. Disconnect the power supply.
2. Remove the inlet strainer. See point 3 above.
3. Turn the pump housing 90° counterclockwise using a screwdriver. See the arrow on the pump housing.
4. Pull off the pump housing.

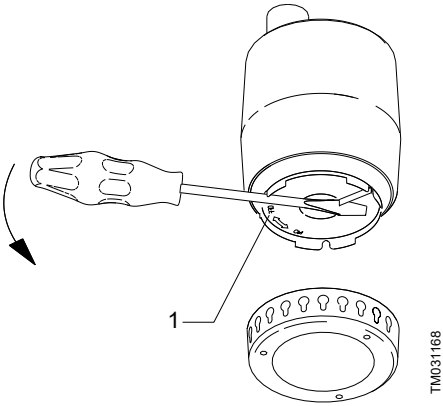

How to remove the pump housing

Pos.	Description
1	Pump housing

5. Clean and flush the inside of the pump to remove possible impurities between the motor and pump sleeve.
6. Clean the impeller. See the figure below.

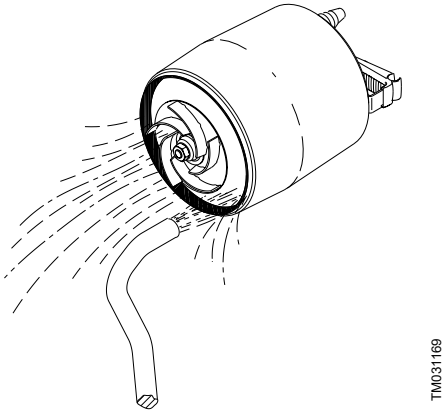

How to flush the impeller

7. Check that the impeller can rotate freely. If not, remove the impeller as described below.
8. Unscrew the nut, cross width 13 mm, from the motor shaft. Use a screwdriver to prevent the impeller from rotating. See the figure below.

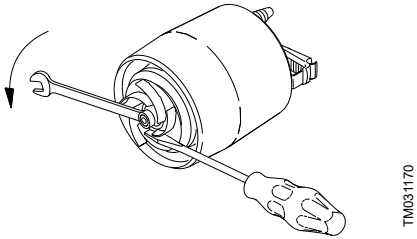

How to remove the impeller

9. Clean the impeller and the area around the shaft.
10. Check the impeller, the pump housing and the sealing part. If necessary, replace defective parts.

Further dismantling of the pump must be carried out by a specially trained person.

Related information

6.3 Service kits

6.2.3 Assembling the pump

Assemble the pump in the reverse order of dismantling.

6.3 Service kits

The impeller, the inlet strainer and the non-return valve are replaceable.

Order numbers for the ordering of service kits and contents of service kits appear from the tables below.

Pump type	Part number
Impeller kit	
UNILIFT KP 150 UNILIFT KP 250 UNILIFT KP 350	015778 015779 015787
Inlet strainer	
UNILIFT KP 150 UNILIFT KP 250	96548064
UNILIFT KP 350	96548066
Non-return valve	
UNILIFT KP 150 UNILIFT KP 250 UNILIFT KP 350	15220

Service kits	Pos.	Designation	Quantity
Impeller kit	A	Impeller	1
	B	Nut	1
	C	Sealing part	1
Inlet strainer	D	Inlet strainer	1

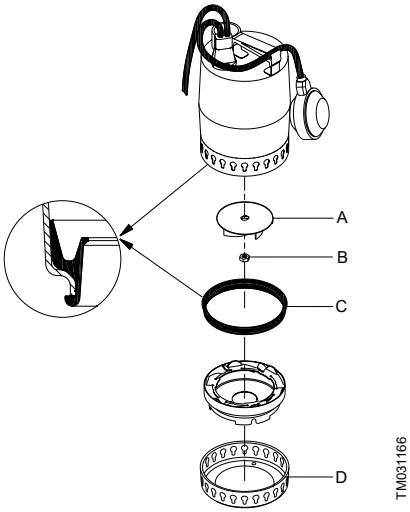

Service parts

If other pump components are damaged or defective, contact the pump supplier.

6.4 Contaminated pumps

If the power cable or the level switch is damaged, it must be replaced by a service workshop authorised by Grundfos.

CAUTION
Biological hazard
Minor or moderate personal injury

- Flush the product thoroughly with clean water and rinse the parts in water after dismantling.
- Wear personal protective equipment.

The product will be classified as contaminated if it has been used for a liquid which is injurious to health or toxic.

If you request Grundfos to service the product, contact Grundfos with details about the pumped liquid before returning the product for service. Otherwise, Grundfos can refuse to accept the product for service.

Any application for service must include details about the pumped liquid.

Clean the product in the best possible way before you return it.

Costs of returning the product are to be paid by the customer.

7. Fault finding the product

DANGER
Electric shock
Death or serious personal injury
- Before starting any work on the product, make sure that the power supply has been switched off and that it cannot be accidentally switched on.

CAUTION
Sharp element
Minor or moderate personal injury
- Wear personal protective equipment.

CAUTION
Toxic material
Minor or moderate personal injury
- The product will be classified as contaminated if it has been used for a liquid which is injurious to health or toxic.
- Wear personal protective equipment.

Fault	Cause	Remedy
The motor does not start.	No power supply.	Connect the power supply.
	The pump was stopped by the level switch.	UNILIFT KP-A: Adjust or replace the level switch.
	The fuses have blown.	Replace the fuses.
	The motor protection or thermal relay has tripped.	Wait until the motor protection trips in again or reset the relay.
	The impeller is blocked by impurities.	Clean the impeller.
	Short circuit in the cable or motor.	Replace the defective part.
The motor protection or thermal relay trips after a short time of operation.	The liquid temperature is too high.	The pump starts automatically after sufficient cooling. If not, use another pump type. Contact your local Grundfos supplier or sales support.
	The impeller is blocked or partly blocked by impurities.	Clean the pump.
	Phase failure.	Call an electrician.
	Too low voltage.	Call an electrician.
	The overload setting of the motor-protective circuit breaker is too low.	Adjust the setting.
The pump runs constantly or gives too little water.	The pump is partly blocked by impurities.	Clean the pump.
	The outlet pipe or valve is partly blocked by impurities.	Clean the outlet pipe or valve.
	The impeller is not properly fixed to the shaft.	Tighten the impeller.
	Incorrect direction of rotation. See section *Checking the direction of rotation* .	Reverse the direction of rotation.
	Incorrect setting of the level switch.	Adjust the level switch.
	The pump is too small for the application.	Replace the pump.
	The impeller is worn.	Replace the impeller.

Fault	Cause	Remedy
The pump runs but gives no water.	The pump is blocked by impurities.	Clean the pump.
	The outlet pipe or valve is blocked by impurities.	Clean the outlet pipe or valve.
	The impeller is not properly fixed to the shaft.	Tighten the impeller.
	There is air in the pump.	Vent the pump and the outlet pipe.
	The liquid level is too low. The pump inlet is not completely submerged in the pumped liquid.	Submerge the pump in the liquid or adjust the level switch.
	Pumps with float switch: The float switch does not move freely.	Adjust the float switch. See section *Start and stop levels*.

Related information

3.2.5 Start and stop levels

3.3.1 Checking the direction of rotation

8. Technical data

8.1 Storage temperature

-20 - +70 °C.

8.2 Operating conditions

Installation depth	Maximum 10 m below liquid level
pH value	4-10
Density	Maximum 1100 kg/m^3
Viscosity	Maximum 1 mm^2/s
Maximum particle size	Max. spherical diameter: 10 mm
Technical data	See the pump nameplate.

! Make sure that there are minimum 3 m free cable above the liquid level. This limits the maximum installation depth to 7 m for pumps with 10 m cable and to 2 m for pumps with 5 m cable.

8.2.1 Liquid temperature

Minimum 0 °C.

The maximum liquid temperature depends on the rated voltage of the pump. See the table below.

Voltage	Maximum liquid temperature [°C]
1 × 100 V, 50 Hz	35
1 × 110 V, 50 Hz	40
1 × 100-110 V, 50 Hz [1)]	40
1 × 220-230 V, 50 Hz	50
1 × 220-240 V, 50 Hz, 50 Hz [1)]	40
1 × 230-240 V, 50 Hz	50
1 × 100 V, 60 Hz	35
1 × 115 V, 60 Hz	50[2)]
1 × 220 V, 60 Hz	40
3 × 200 V, 50 Hz	35
3 × 380-400 V, 50 Hz [1)]	50
3 × 380-415 V, 50 Hz	50
3 × 200 V, 60 Hz	35
At intervals of at least 30 minutes, the pumps may, however, run at maximum 70 °C for periods not exceeding 2 minutes.	

[1)] Voltage variant for UNILIFT KP 350.

[2)] KP 350: 45.

8.3 Sound pressure level

The sound pressure level of the pump is lower than the limiting values stated in the EC Council Directive 2006/42/EC relating to machinery.

9. Disposing of the product

This product or parts of it must be disposed of in an environmentally sound way.

1. Use the public or private waste collection service.
2. If this is not possible, contact the nearest Grundfos company or service workshop.

The crossed-out wheelie bin symbol on a product means that it must be disposed of separately from household waste. When a product marked with this symbol reaches its end of life, take it to a collection point designated by the local waste disposal authorities. The separate collection and recycling of such products will help protect the environment and human health.

See also end-of-life information at
www.grundfos.com/product-recycling.

A.1. GRUNDFOS WARRANTY - AUSTRALIA AND NEW ZEALAND

Free from manufacturing defects

1. The relevant Grundfos entity, as specified below, warrants that from the date of purchase and for the period related to the specific product purchased (**Warranty Period**) the products purchased (**Equipment**) by you (**the Customer**) in the relevant country will, with normal use, be free from manufacturing defects and material defects (**Warranty**), subject to the terms set out herein.

   FOR EQUIPMENT PURCHASED IN AUSTRALIA: : This Warranty is provided by Grundfos Pumps Pty Ltd (ACN 007920765) of 515 South Road Regency Park SA 5010 PH: (08) 8461 4611 Email: *contact-au@grundfos.com* (**Grundfos Australia**)

   FOR EQUIPMENT PURCHASED IN NEW ZEALAND: This Warranty is provided by Grundfos Pumps NZ Limited (Company number 108507) of 17 Beatrice Tinsley Crescent, Albany, North Shore City, 0632 PH: (09) 41532540 Email: *contact-nz@grundfos.com* (**Grundfos NZ**).

   (In this Warranty references to "**Grundfos**" shall mean either Grundfos Australia or Grundfos NZ, as applicable)

2. The relevant **Warranty Period** varies between different items of Equipment and can be confirmed by your Equipment supplier or by contacting the relevant Grundfos entity at the above address.

Non Transferable

3. This Warranty is non- transferable and only applies to the first person to purchase and to use or install the Equipment.

Conditions

4. The Customer must provide the original proof or purchase for the Equipment.
5. This Warranty only applies where a defect has arisen, wholly or substantially, as a result of faulty manufacture, parts or workmanship and where such defect appears during the Warranty Period.
6. The Warranty does not apply in the following circumstances:
   a. where the damage arises due to normal wear and tear;
   b. where the Equipment was not installed in accordance with Grundfos' installation and operating instructions for the Equipment;
   c. where the Customer failed to specify a site condition or specification at the time of ordering the Equipment, which subsequently affects the operation of the Equipment;
   d. where damage results because the Equipment is installed to operate at a duty point other than what has been specified at the time of ordering;
   e. the Equipment has been stored by the Customer prior to installation and operation and such period of storage is not in accordance with the requirements set out in the Equipment's operation and installation manual;
   f. where the Customer attempts to repair the Equipment;
   g. where damage is caused by abuse, mishandling or failure to follow operating instructions;
   h. where the servicing or modification of the Equipment was conducted by someone other than by Grundfos or its authorised service agent; or
   i. where damage occurs during shipping or other transit.

7 This Warranty does not cover:
   a. repair of Equipment polluted by poisonous media or other liquids injurious to the environment;
   b. the cost of disassembly, assembly and installation; or
   c. the Equipment where protection devices have been installed but have not been used or monitored.

Excluded products

8. This Warranty does not apply to Equipment that Grundfos imports that is not manufactured by Grundfos (or one of its related companies). However:

   a. **FOR EQUIPMENT PURCHASED IN AUSTRALIA:** The Customer is entitled to the benefit of the warranty provided by the overseas manufacturer of that Equipment (if any), and any rights the Customer may have under the Australian Consumer Law (**ACL**).

   b. **FOR EQUIPMENT PURCHASED IN NEW ZEALAND:** The Customer is entitled to the benefit of the warranty provided by the overseas manufacturer of that Equipment (if any), and any rights the Customer may have under the Consumer Guarantees Act 1993 (**CGA**) that have not otherwise been lawfully excluded.

Warranty is additional to statutory consumer rights

9. This Warranty is in addition to and does not exclude, restrict or modify in any way any non-excludable statutory rights the Customer may have, including any rights the Customer may have under the ACL or the CGA (as applicable).

10. **FOR EQUIPMENT PURCHASED IN AUSTRALIA:** Grundfos Australia provides the following advice to all Customers who are consumers as defined by the ACL and to whom the ACL applies, as required by the ACL:

    Our goods come with guarantees that cannot be excluded under the Australian Consumer Law. You are entitled to a replacement or refund for a major failure and compensation for any other reasonably foreseeable loss or damage. You are also entitled to have the goods repaired or replaced if the goods fail to be of acceptable quality and the failure does not amount to a major failure.

11. **FOR EQUIPMENT PURCHASED IN NEW ZEALAND:** Grundfos NZ provides the following advice to all Customers who are consumers as defined by the CGA and to whom the CGA applies:

    Unless the provisions of the CGA have been lawfully excluded, the guarantees and the remedies for failure to comply with those guarantees as set out in the CGA shall apply. Such remedies include the repair or replacement of the Equipment or, where the failure is of a substantial character, the rejection of the Equipment or compensation for the reduction in value of the Equipment. In addition to these remedies, you are also entitled to compensation for reasonably foreseeable loss or damage resulting from the failure.

How to claim

12. Instructions for making a Warranty claim:

    a. The Customer must inform Grundfos as soon as any Warranty claim arises. The Customer must contact Grundfos:

       i. in writing, by notice sent to:

          FOR EQUIPMENT PURCHASED IN AUSTRALIA:

          Grundfos Pumps Pty Ltd
          515 South Road, Regency Park, South Australia, 5010;

          FOR EQUIPMENT PURCHASED IN NEW ZEALAND:

          Grundfos Pumps New Zealand Ltd
          17 Beatrice Tinsley Crescent, Albany, North Shore City, 0632; or

       ii. by returning the item to the place of purchase and requesting them to complete the required documentation (a Goods Return Advise or a Field Warranty Claim Form) and send it to Grundfos.

    b. The Customer must provide Grundfos with a description of the problem encountered with the Equipment, the Equipment model number, serial number, and date of purchase. Most importantly, the Customer must provide Grundfos the original proof of purchase. The Customer will bear the cost of notifying Grundfos of the Warranty claim.

What Grundfos will do

13. If Grundfos is informed of any claim within the Warranty Period and that claim is within the terms of this Warranty, Grundfos will make arrangements for the service, repair or replacement of the Equipment, at the sole discretion and cost of Grundfos. The Customer will bear the cost of freight and insurance to transport any products to Grundfos, or to the place of purchase (as applicable). Grundfos will bear the cost of freight for the return and dispatch of the repaired or replaced Equipment if the claim is accepted under this Warranty.

14. If a Warranty claim is not accepted, Grundfos will inform the Customer in writing that the Warranty claim was not accepted and the reasons for non-acceptance. The Customer will bear the cost of any freight for the return and dispatch of the Equipment, and the cost of any repairs undertaken by Grundfos if requested by the Customer to do so.

Warranty Periods

Unless otherwise stated below, all Grundfos product comes as standard with a 2 Year Warranty.

<u>1 Year Warranty</u>

- Start Controllers
- Grundfos Ultra 6"-12" Ultra
- Ultra 4" Motor TX & GX
- DIS
- DIT
- Wellmaster Accessories
- Dosing accessories
- DSB
- OCD
- VGA
- DSA
- DSS
- DIA
- UV

<u>3 Year Warranty</u>

- Grundfos SP 4"
- CRI
- Grundfos SP w/MP204 6"-12"

<u>5 Year Warranty</u>

- Pressure Tanks
- Wellmaster Flexible Rising Main
- CRN

<u>10 Year Warranty</u>

- Fixed Solar Array

<u>25 Year Linear Performance Warranty</u>

- Solar Modules

A.2. Argentinian supplement sheet

Only for Argentinean market // Solo para el mercado argentino:

La bomba UNILIFT AP(B)/KP está determinada para instalaciones fijas y debe conectarse a una bornera o un tablero Grundfos modelo LCD108.

Bomba monofásica:

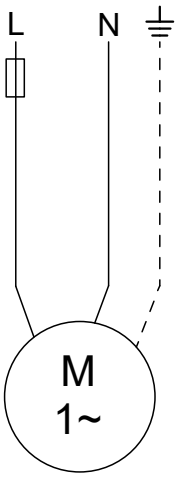

TM1040351

Cable marrón: LINEA
Cable celeste: NEUTRO
Cable verde/amarillo: TIERRA

Bomba trifásica:

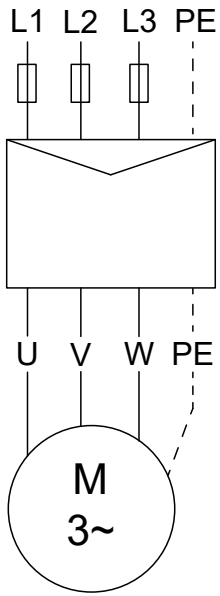

TM1040352

Cable marrón: L1
Cable celeste o gris: L2
Cable negro: L3
Cable verde/amarillo: TIERRA (PE)

Argentina
Bombas GRUNDFOS de Argentina S.A.
Ruta Panamericana km. 37.500industin
1619 - Garín Pcia. de B.A.
Tel.: +54-3327 414 444
Fax: +54-3327 45 3190

Australia
GRUNDFOS Pumps Pty. Ltd.
P.O. Box 2040
Regency Park
South Australia 5942
Tel.: +61-8-8461-4611
Fax: +61-8-8340-0155

Austria
GRUNDFOS Pumpen Vertrieb
Ges.m.b.H.
Grundfosstraße 2
A-5082 Grödig/Salzburg
Tel.: +43-6246-883-0
Fax: +43-6246-883-30

Belgium
N.V. GRUNDFOS Bellux S.A.
Boomsesteenweg 81-83
B-2630 Aartselaar
Tel.: +32-3-870 7300
Fax: +32-3-870 7301

Bosnia and Herzegovina
GRUNDFOS Sarajevo
Zmaja od Bosne 7-7A
BiH-71000 Sarajevo
Tel.: +387 33 592 480
Fax: +387 33 590 465
www.ba.grundfos.com
E-mail: grundfos@bih.net.ba

Brazil
BOMBAS GRUNDFOS DO BRASIL
Av. Humberto de Alencar Castelo
Branco, 630
CEP 09850 - 300
São Bernardo do Campo - SP
Tel.: +55-11 4393 5533
Fax: +55-11 4343 5015

Bulgaria
Grundfos Bulgaria EOOD
Slatina District
Iztochna Tangenta street no. 100
BG - 1592 Sofia
Tel.: +359 2 49 22 200
Fax: +359 2 49 22 201
E-mail: bulgaria@grundfos.bg

Canada
GRUNDFOS Canada inc.
2941 Brighton Road
Oakville, Ontario
L6H 6C9
Tel.: +1-905 829 9533
Fax: +1-905 829 9512

China
GRUNDFOS Pumps (Shanghai) Co. Ltd.
10F The Hub, No. 33 Suhong Road
Minhang District
Shanghai 201106 PRC
Tel.: +86 21 612 252 22
Fax: +86 21 612 253 33

Colombia
GRUNDFOS Colombia S.A.S.
Km 1.5 vía Siberia-Cota Conj. Potrero
Chico,
Parque Empresarial Arcos de Cota Bod.
1A.
Cota, Cundinamarca
Tel.: +57(1)-2913444
Fax: +57(1)-8764586

Croatia
GRUNDFOS CROATIA d.o.o.
Buzinski prilaz 38, Buzin
HR-10010 Zagreb
Tel.: +385 1 6595 400
Fax: +385 1 6595 499
www.hr.grundfos.com

Czech Republic
GRUNDFOS Sales Czechia and Slovakia
s.r.o.
Čajkovského 21
779 00 Olomouc
Tel.: +420-585-716 111

Denmark
GRUNDFOS DK A/S
Martin Bachs Vej 3
DK-8850 Bjerringbro
Tel.: +45-87 50 50 50
www.grundfos.com/DK

Estonia
SIA Grundfos Pumps Baltic Eesti filiaal
Priisle tee 10
13914 Tallinn
Tel.: + 372 606 1690
E-mail: estonia@sales.grundfos.com

Finland
OY GRUNDFOS Pumput AB
Trukkikuja 1
FI-01360 Vantaa
Tel.: +358-(0) 207 889 500

France
Pompes GRUNDFOS Distribution S.A.
Parc d'Activités de Chesnes
57, rue de Malacombe
F-38290 St. Quentin Fallavier (Lyon)
Tel.: +33-4 74 82 15 15
Fax: +33-4 74 94 10 51

Germany
GRUNDFOS GMBH
Schlüterstr. 33
40699 Erkrath
Tel.: +49-(0) 211 929 69-0
Fax: +49-(0) 211 929 69-3799
E-mail: infoservice@grundfos.de
Service in Deutschland:
kundendienst@grundfos.de

Greece
GRUNDFOS Hellas A.E.B.E.
20th km. Athinon-Markopoulou Av.
P.O. Box 71
GR-19002 Peania
Tel.: +0030-210-66 83 400
Fax: +0030-210-66 46 273

Hong Kong
GRUNDFOS Pumps (Hong Kong) Ltd.
Unit 1, Ground floor, Siu Wai industrial
Centre
29-33 Wing Hong Street & 68 King Lam
Street, Cheung Sha Wan
Kowloon
Tel.: +852-27861706 / 27861741
Fax: +852-27858664

Hungary
GRUNDFOS South East Europe Kft.
Tópark u. 8
H-2045 Törökbálint
Tel.: +36-23 511 110
Fax: +36-23 511 111

India
GRUNDFOS Pumps India Private
Limited
118 Old Mahabalipuram Road
Thoraipakkam
Chennai 600 097
Tel.: +91-44 2496 6800

Indonesia
PT GRUNDFOS Pompa
Graha intirub Lt. 2 & 3
Jln. Cililitan Besar No.454. Makasar,
Jakarta Timur
ID-Jakarta 13650
Tel.: +62 21-469-51900
Fax: +62 21-460 6910 / 460 6901

Ireland
GRUNDFOS (Ireland) Ltd.
Unit A, Merrywell Business Park
Ballymount Road Lower
Dublin 12
Tel.: +353-1-4089 800
Fax: +353-1-4089 830

Italy
GRUNDFOS Pompe Italia S.r.l.
Via Gran Sasso 4
I-20060 Truccazzano (Milano)
Tel.: +39-02-95838112
Fax: +39-02-95309290 / 95838461

Japan
GRUNDFOS Pumps K.K.
1-2-3, Shin-Miyakoda, Kita-ku
Hamamatsu
431-2103 Japan
Tel.: +81 53 428 4760
Fax: +81 53 428 5005

Kazakhstan
Grundfos Kazakhstan LLP
7' Kyz-Zhibek Str., Kok-Tobe micr.
KZ-050020 Almaty Kazakhstan
Tel.: +7 (727) 227-98-55/56

Korea
GRUNDFOS Pumps Korea Ltd.
6th Floor, Aju Building 679-5
Yeoksam-dong, Kangnam-ku, 135-916
Seoul, Korea
Tel.: +82-2-5317 600
Fax: +82-2-5633 725

Latvia
GRUNDFOS Pumps Baltic SIA
Gunāra Astras iela 8B
LV-1082, Rīga,
Tel.: + 371 671 49640
E-mail: latvia@sales.grundfos.com

Lithuania
SIA „GRUNDFOS PUMPS
BALTIC“ Lietuvos filialas
Smolensko g. 6
LT-03201 Vilnius
Tel.: + 370 5 239 5430
E-mail: lithuania@sales.grundfos.com

Malaysia
GRUNDFOS Pumps Sdn. Bhd.
7 Jalan Peguam U1/25
Glenmarie industrial Park
40150 Shah Alam, Selangor
Tel.: +60-3-5569 2922
Fax: +60-3-5569 2866

Mexico
Bombas GRUNDFOS de México
S.A. de C.V.
Boulevard TLC No. 15
Parque industrial Stiva Aeropuerto
Apodaca, N.L. 66600
Tel.: +52-81-8144 4000
Fax: +52-81-8144 4010

Netherlands
GRUNDFOS Netherlands
Veluwezoom 35
1326 AE Almere
Postbus 22015
1302 CA ALMERE
Tel.: +31-88-478 6336
Fax: +31-88-478 6332
E-mail: info_gnl@grundfos.com

New Zealand
GRUNDFOS Pumps NZ Ltd.
17 Beatrice Tinsley Crescent
North Harbour Industrial Estate
Albany, Auckland
Tel.: +64-9-415 3240
Fax: +64-9-415 3250

Norway
GRUNDFOS Pumper A/S
Strømsveien 344
Postboks 235, Leirdal
N-1011 Oslo
Tel.: +47-22 90 47 00
Fax: +47-22 32 21 50

Poland
GRUNDFOS Pompy Sp. z o.o.
ul. Klonowa 23
Baranowo k. Poznania
PL-62-081 Przeźmierowo
Tel.: (+48-61) 650 13 00
Fax: (+48-61) 650 13 50

Portugal
Bombas GRUNDFOS Portugal, S.A.
Rua Calvet de Magalhães, 241
Apartado 1079
P-2770-153 Paço de Arcos
Tel.: +351-21-440 76 00
Fax: +351-21-440 76 90

Romania
GRUNDFOS Pompe România SRL
S-PARK BUSINESS CENTER, Clădirea A2, etaj 2
Str. Tipografilor, Nr. 11-15, Sector 1, Cod 013714
Bucuresti, Romania
Tel.: 004 021 2004 100
E-mail: romania@grundfos.ro

Serbia
Grundfos Srbija d.o.o.
Omladinskih brigada 90b
11070 Novi Beograd
Tel.: +381 11 2258 740
Fax: +381 11 2281 769
www.rs.grundfos.com

Singapore
GRUNDFOS (Singapore) Pte. Ltd.
25 Jalan Tukang
Singapore 619264
Tel.: +65-6681 9688
Faxax: +65-6681 9689

Slovakia
GRUNDFOS s.r.o.
Prievozská 4D 821 09 BRATISLAVA
Tel.: +421 2 5020 1426
sk.grundfos.com

Slovenia
GRUNDFOS LJUBLJANA, d.o.o.
Leskoškova 9e, 1122 Ljubljana
Tel.: +386 (0) 1 568 06 10
Fax: +386 (0)1 568 06 19
E-mail: tehnika-si@grundfos.com

South Africa
GRUNDFOS (PTY) LTD
16 Lascelles Drive, Meadowbrook Estate
1609 Germiston, Johannesburg
Tel.: (+27) 10 248 6000
Fax: (+27) 10 248 6002
E-mail: lgradidge@grundfos.com

Spain
Bombas GRUNDFOS España S.A.
Camino de la Fuentecilla, s/n
E-28110 Algete (Madrid)
Tel.: +34-91-848 8800
Fax: +34-91-628 0465

Sweden
GRUNDFOS AB
Box 333 (Lunnagårdsgatan 6)
431 24 Mölndal
Tel.: +46 31 332 23 000
Fax: +46 31 331 94 60

Switzerland
GRUNDFOS Pumpen AG
Bruggacherstrasse 10
CH-8117 Fällanden/ZH
Tel.: +41-44-806 8111
Fax: +41-44-806 8115

Taiwan
GRUNDFOS Pumps (Taiwan) Ltd.
7 Floor, 219 Min-Chuan Road
Taichung, Taiwan, R.O.C.
Tel.: +886-4-2305 0868
Fax: +886-4-2305 0878

Thailand
GRUNDFOS (Thailand) Ltd.
92 Chaloem Phrakiat Rama 9 Road
Dokmai, Pravej, Bangkok 10250
Tel.: +66-2-725 8999
Fax: +66-2-725 8998

Turkey
GRUNDFOS POMPA San. ve Tic. Ltd. Sti.
Gebze Organize Sanayi Bölgesi
Ihsan dede Caddesi
2. yol 200. Sokak No. 204
41490 Gebze/ Kocaeli
Tel.: +90 - 262-679 7979
Fax: +90 - 262-679 7905
E-mail: satis@grundfos.com

Ukraine
ТОВ "ГРУНДФОС УКРАЇНА"
Бізнес Центр Європа
Столичне шосе, 103
м. Київ, 03131, Україна
Tel.: (+38 044) 237 04 00
Fax: (+38 044) 237 04 01
E-mail: ukraine@grundfos.com

United Arab Emirates
GRUNDFOS Gulf Distribution
P.O. Box 16768
Jebel Ali Free Zone, Dubai
Tel.: +971 4 8815 166
Fax: +971 4 8815 136

United Kingdom
GRUNDFOS Pumps Ltd.
Grovebury Road
Leighton Buzzard/Beds. LU7 4TL
Tel.: +44-1525-850000
Fax: +44-1525-850011

U.S.A.
Global Headquarters for WU
856 Koomey Road
Brookshire, Texas 77423 USA
Phone: +1-630-236-5500

Uzbekistan
Grundfos Tashkent, Uzbekistan
The Representative Office of Grundfos Kazakhstan in Uzbekistan
38a, Oybek street, Tashkent
Tel.: (+998) 71 150 3290 / 71 150 3291
Fax: (+998) 71 150 3292

© Grundfos Holding A/S 04.2026

96894217

ECM: 1428942	08.2025

Grundfos Holding A/S
Poul Due Jensens Vej 7
DK-8850 Bjerringbro
Tel: +45 87 50 14 00
www.grundfos.com