DMI 208

Dosing Pump

Installation and operating instructions

Declaration of conformity

GB Declaration of Conformity

We, Grundfos, declare under our sole responsibility that the products DMI 208, to which this declaration relates, are in conformity with these Council directives on the approximation of the laws of the EC member states:

– Machinery Directive (2006/42/EC).
  Standards used: EN 809: 1998, EN ISO 12100-1+A1: 2009 and EN ISO 12100-2+A1: 2009.
– Low Voltage Directive (2006/95/EC).*)
  Standard used: EN 60204-1+A1: 2009.
– EMC Directive (2004/108/EC).
  Standards used: EN 61000-6-2: 2005 and EN 61000-6-4: 2007.

*) This applies only to products with supply voltage > 50 V AC or > 75 V DC.

BG Декларация за съответствие

Ние, фирма Grundfos, заявяваме с пълна отговорност, че продуктите DMI 208, за които се отнася настоящата декларация, отговарят на следните указания на Съвета за уеднаквяване на правните разпоредби на държавите членки на ЕС:

– Директива за машините (2006/42/EC).
  Приложен стандарт: EN 809: 1998, EN ISO 12100-1+A1: 2009 и EN ISO 12100-2+A1: 2009.
– Директива за нисковолтови системи (2006/95/EC).*)
  Приложени стандарти: EN 60204-1+A1: 2009.
– Директива за електромагнитна съвместимост (2004/108/EC).
  Приложени стандарти: EN 61000-6-2: 2005 и EN 61000-6-4: 2007.

*) Това е приложимо само за продукти със захранващо напрежение > 50 V AC или > 75 V DC.

CZ Prohlášení o shodě

My firma Grundfos prohlašujeme na svou plnou odpovědnost, že výrobky DMI 208, na něž se toto prohlášení vztahuje, jsou v souladu s ustanoveními směrnice Rady pro sblížení právních předpisů členských států Evropského společenství v oblastech:

– Směrnice pro strojní zařízení (2006/42/ES).
  Použitá norma: EN 809: 1998, EN ISO 12100-1+A1: 2009 a EN ISO 12100-2+A1: 2009.
– Směrnice pro nízkonapěťové aplikace (2006/95/ES).*)
  Použité normy: EN 60204-1+A1: 2009.
– Směrnice pro elektromagnetickou kompatibilitu (EMC) (2004/108/ES).
  Použité normy: EN 61000-6-2: 2005 a EN 61000-6-4: 2007.

*) Používá se pouze u výrobků s napájecím napětím > 50 V AC nebo > 75 V DC.

DK Overensstemmelseserklæring

Vi, Grundfos, erklærer under ansvar at produkterne DMI 208 som denne erklæring omhandler, er i overensstemmelse med disse af Rådets direktiver om indbyrdes tilnærmelse til EF-medlemsstaternes lovgivning:

– Maskindirektivet (2006/42/EF).
  Anvendt standard: EN 809: 1998, EN ISO 12100-1+A1: 2009 og EN ISO 12100-2+A1: 2009.
– Lavspændingsdirektivet (2006/95/EF).*)
  Anvendte standarder: EN 60204-1+A1: 2009.
– EMC-direktivet (2004/108/EF).
  Anvendte standarder: EN 61000-6-2: 2005 og EN 61000-6-4: 2007.

*) Dette gælder kun for produkter med forsyningsspænding > 50 V AC eller > 75 V DC.

DE Konformitätserklärung

Wir, Grundfos, erklären in alleiniger Verantwortung, dass die Produkte DMI 208, auf die sich diese Erklärung bezieht, mit den folgenden Richtlinien des Rates zur Angleichung der Rechtsvorschriften der EU-Mitgliedsstaaten übereinstimmen:

– Maschinenrichtlinie (2006/42/EG).
  Norm, die verwendet wurde: EN 809: 1998, EN ISO 12100-1+A1: 2009 und EN ISO 12100-2+A1: 2009.
– Niederspannungsrichtlinie (2006/95/EG).*)
  Normen, die verwendet wurden: EN 60204-1+A1: 2009..
– EMV-Richtlinie (2004/108/EG).
  Normen, die verwendet wurden: EN 61000-6-2: 2005 und EN 61000-6-4: 2007.

*) Dies gilt nur für Produkte mit einer Versorgungsspannung > 50 V AC oder > 75 V DC.

EE Vastavusdeklaratsioon

Meie, Grundfos, deklareerime enda ainuvastutusel, et tooted DMI 208, mille kohta käesolev juhend käib, on vastavuses EÜ Nõukogu direktiividega EMÜ liikmesriikide seaduste ühitamise kohta, mis käsitlevad:

– Masinate ohutus (2006/42/EC).
  Kasutatud standard: EN 809: 1998, EN ISO 12100-1+A1: 2009 ja EN ISO 12100-2+A1: 2009.
– Madalpinge direktiiv (2006/95/EC).*)
  Kasutatud standardid: EN 60204-1+A1: 2009.
– Elektromagnetiline ühilduvus (EMC direktiiv) (2004/108/EC).
  Kasutatud standardid: EN 61000-6-2: 2005 ja EN 61000-6-4: 2007.

*) See kehtib ainult toodetele toitepingega > 50 V AC või > 75 V DC.

ES Declaración de Conformidad

Nosotros, Grundfos, declaramos bajo nuestra entera responsabilidad que los productos DMI 208, a los cuales se refiere esta declaración, están conformes con las Directivas del Consejo en la aproximación de las leyes de las Estados Miembros del EM:

– Directiva de Maquinaria (2006/42/CE).
  Norma aplicada: EN 809: 1998, EN ISO 12100-1+A1: 2009 y EN ISO 12100-2+A1: 2009.
– Directiva de Baja Tensión (2006/95/CE).*)
  Normas aplicadas: EN 60204-1+A1: 2009.
– Directiva EMC (2004/108/CE).
  Normas aplicadas: EN 61000-6-2: 2005 y EN 61000-6-4: 2007.

*) Esto sólo se aplica a productos con voltaje > 50 V AC o > 75 V DC.

FR Déclaration de Conformité

Nous, Grundfos, déclarons sous notre seule responsabilité, que les produits DMI 208, auxquels se réfère cette déclaration, sont conformes aux Directives du Conseil concernant le rapprochement des législations des Etats membres CE relatives aux normes énoncées ci-dessous :

– Directive Machines (2006/42/CE).
  Norme utilisée : EN 809 : 1998, EN ISO 12100-1+A1 : 2009 et EN ISO 12100-2+A1 : 2009.
– Directive Basse Tension (2006/95/CE).*)
  Normes utilisées : EN 60204-1+A1 : 2009.
– Directive Compatibilité Electromagnétique CEM (2004/108/CE).
  Normes utilisées : EN 61000-6-2 : 2005 et EN 61000-6-4 : 2007.

*) Cela s'applique uniquement aux produits dont la tension d'alimentation est > à 50 V AC ou > à 75 V DC.

HR Izjava o usklađenosti

Mi, Grundfos, izjavljujemo pod vlastitom odgovornošću da je proizvod DMI 208, na koji se ova izjava odnosi, u skladu s direktivama ovog Vijeća o usklađivanju zakona država članica EU:

- Direktiva za strojeve (2006/42/EZ).
  Korištena norma: EN 809: 1998, EN ISO 12100-1+A1: 2009 i EN ISO 12100-2+A1: 2009.
- Direktiva za niski napon (2006/95/EZ).*)
  Korištene norme: EN 60204-1+A1: 2009.
- Direktiva za elektromagnetsku kompatibilnost (2004/108/EZ).
  Korištene norme: EN 61000-6-2: 2005 i EN 61000-6-4: 2007.

*) Ovo se odnosi samo na proizvode s opskrbnim naponom > 50 V AC ili > 75 V DC.

IT Dichiarazione di Conformità

Grundfos dichiara sotto la sua esclusiva responsabilità che i prodotti DMI 208, ai quali si riferisce questa dichiarazione, sono conformi alle seguenti direttive del Consiglio riguardanti il riavvicinamento delle legislazioni degli Stati membri CE:

- Direttiva Macchine (2006/42/CE).
  Norma applicata: EN 809: 1998, EN ISO 12100-1+A1: 2009 e EN ISO 12100-2+A1: 2009.
- Direttiva Bassa Tensione (2006/95/CE).*)
  Norme applicate: EN 60204-1+A1: 2009.
- Direttiva EMC (2004/108/CE).
  Norme applicate: EN 61000-6-2: 2005 e EN 61000-6-4: 2007.

*) Questo è applicabile solo a prodotti con tensione di alimentazione > 50 VAC o > 75 VDC.

HU Megfelelőségi nyilatkozat

Mi, a Grundfos, egyedüli felelősséggel kijelentjük, hogy a DMI 208 termékek, amelyekre jelen nyilatkozik vonatkozik, megfelelnek az Európai Unió tagállamainak jogi irányelveit összehangoló tanács alábbi előírásainak:

- Gépek (2006/42/EK).
  Alkalmazott szabvány: EN 809: 1998EN 809: 1998, EN ISO 12100-1+A1: 2009 és EN ISO 12100-2+A1: 2009.
- Kisfeszültségű Direktíva (2006/95/EK).*)
  Alkalmazott szabványok: EN 60204-1+A1: 2009.
- EMC Direktíva (2004/108/EK).
  Alkalmazott szabványok: EN 61000-6-2: 2005 és EN 61000-6-4: 2007.

*) Ez csak a > 50 V AC vagy > 75 V DC tápfeszültségű termékekre vonatkozik.

NL Overeenkomstigheidsverklaring

Wij, Grundfos, verklaren geheel onder eigen verantwoordelijkheid dat de producten DMI 208 waarop deze verklaring betrekking heeft, in overeenstemming zijn met de Richtlijnen van de Raad in zake de onderlinge aanpassing van de wetgeving van de EG Lidstaten betreffende:

- Machine Richtlijn (2006/42/EC).
  Gebruikte norm: EN 809: 1998, EN ISO 12100-1+A1: 2009 en EN ISO 12100-2+A1: 2009.
- Laagspannings Richtlijn (2006/95/EC).*)
  Gebruikte normen: EN 60204-1+A1: 2009.
- EMC Richtlijn (2004/108/EC).
  Gebruikte normen: EN 61000-6-2: 2005 en EN 61000-6-4: 2007.

*) Dit is alleen van toepassing voor producten met voedingsspanning 50 V AC of > 75 V DC.

PL Deklaracja zgodności

My, Grundfos, oświadczamy z pełną odpowiedzialnością, że nasze wyroby DMI 208, których deklaracja niniejsza dotyczy, są zgodne z następującymi wytycznymi Rady d/s ujednolicenia przepisów prawnych krajów członkowskich WE:

- Dyrektywa Maszynowa (2006/42/WE).
  Zastosowana norma: EN 809: 1998, EN ISO 12100-1+A1: 2009 oraz EN ISO 12100-2+A1: 2009.
- Dyrektywa Niskonapięciowa (LVD) (2006/95/WE).*)
  Zastosowane normy: EN 60204-1+A1: 2009.
- Dyrektywa EMC (2004/108/WE).
  Zastosowane normy: EN 61000-6-2: 2005 oraz EN 61000-6-4: 2007.

*) Dotyczy to tylko produktów o napięciu zasilania > 50 AC lub > 75 V DC.

PT Declaração de Conformidade

A Grundfos declara sob sua única responsabilidade que os produtos DMI 208, aos quais diz respeito esta declaração, estão em conformidade com as seguintes Directivas do Conselho sobre a aproximação das legislações dos Estados Membros da CE:

- Directiva Máquinas (2006/42/CE).
  Norma utilizada: EN 809: 1998, EN ISO 12100-1+A1: 2009 e EN ISO 12100-2+A1: 2009.
- Directiva Baixa Tensão (2006/95/CE).*)
  Normas utilizadas: EN 60204-1+A1: 2009.
- Directiva EMC (compatibilidade electromagnética) (2004/108/CE).
  Normas utilizadas: EN 61000-6-2: 2005 e EN 61000-6-4: 2007.

*) Isto aplica-se apenas a produtos com tensão de alimentação > 50 V AC ou > 75 V DC.

RU Декларация о соответствии

Мы, компания Grundfos, со всей ответственностью заявляем, что изделия DMI 208, к которым относится настоящая декларация, соответствуют следующим Директивам Совета Евросоюза об унификации законодательных предписаний стран-членов ЕС:

- Механические устройства (2006/42/EC).
  Применявшийся стандарт: EN 809: 1998, EN ISO 12100-1+A1: 2009 и EN ISO 12100-2+A1: 2009.
- Низковольтное оборудование (2006/95/EC).*)
  Применявшиеся стандарты: EN 60204-1+A1: 2009.
- Электромагнитная совместимость (2004/108/EC).
  Применявшиеся стандарты: EN 61000-6-2: 2005 и EN 61000-6-4: 2007.

*) Относится только к продуктам с сетевым напряжением > 50 В переменного тока или > 75 В постоянного тока.

RO Declaraţie de Conformitate

Noi, Grundfos, declarăm pe propria răspundere că produsele DMI 208, la care se referă această declaraţie, sunt în conformitate cu aceste Directive de Consiliu asupra armonizării legilor Statelor Membre CE:

- Directiva Utilaje (2006/42/CE).
  Standard utilizat: EN 809: 1998, EN ISO 12100-1+A1: 2009 şi EN ISO 12100-2+A1: 2009.
- Directiva Tensiune Joasă (2006/95/CE).*)
  Standarde utilizate: EN 60204-1+A1: 2009.
- Directiva EMC (2004/108/CE).
  Standarde utilizate: EN 61000-6-2: 2005 şi EN 61000-6-4: 2007.

*) Se aplică numai produselor cu tensiunea de alimentare > 50 V AC ori > 75 V DC.

SK Prehlásenie o konformite

My firma Grundfos prehlasujeme na svoju plnú zodpovednosť, že výrobky DMI 208, na ktoré sa toto prehlásenie vzťahuje, sú v súlade s ustanovením smernice Rady pre zblíženie právnych predpisov členských štátov Európskeho spoločenstva v oblastiach:

- Smernica pre strojové zariadenie (2006/42/EC).
  Použitá norma: EN 809: 1998, EN ISO 12100-1+A1: 2009 a EN ISO 12100-2+A1: 2009.
- Smernica pre nízkonapäťové aplikácie (2006/95/EC).*)
  Použité normy: EN 60204-1+A1: 2009.
- Smernica pre elektromagnetickú kompatibilitu (2004/108/EC).
  Použité normy: EN 61000-6-2: 2005 a EN 61000-6-4: 2007.

*) To sa vzťahuje len na výrobky s napájacím napätím > 50 V AC alebo > 75 V DC.

SI Izjava o skladnosti

V Grundfosu s polno odgovornostjo izjavljamo, da so naši izdelki DMI 208, na katere se ta izjava nanaša, v skladu z naslednjimi direktivami Sveta o približevanju zakonodaje za izenačevanje pravnih predpisov držav članic ES:

- Direktiva o strojih (2006/42/ES).
  Uporabljena norma: EN 809: 1998, EN ISO 12100-1+A1: 2009 in EN ISO 12100-2+A1: 2009.
- Direktiva o nizki napetosti (2006/95/ES).*)
  Uporabljeni normi: EN 60204-1+A1: 2009.
- Direktiva o elektromagnetni združljivosti (EMC) (2004/108/ES).
  Uporabljeni normi: EN 61000-6-2: 2005 in EN 61000-6-4: 2007.

*) To velja samo za proizvode z napajalno napetostjo > 50 V AC ali > 75 V DC.

FI Vaatimustenmukaisuusvakuutus

Me, Grundfos, vakuutamme omalla vastuullamme, että tuotteet DMI 208, joita tämä vakuutus koskee, ovat EY:n jäsenvaltioiden lainsäädännön yhdenmukaistamiseen tähtäävien Euroopan neuvoston direktiivien vaatimusten mukaisia seuraavasti:

– Konedirektiivi (2006/42/EY).
  Sovellettu standardi: EN 809: 1998, EN ISO 12100-1+A1: 2009 ja EN ISO 12100-2+A1: 2009.
– Pienjännitedirektiivi (2006/95/EY).*)
  Sovellettavat standardit: EN 60204-1+A1: 2009.
– EMC-direktiivi (2004/108/EY).
  Sovellettavat standardit: EN 61000-6-2: 2005 ja EN 61000-6-4: 2007.

*) Koskee vain tuotteita, joiden käyttöjännite on > 50 V AC tai > 75 V DC.

SE Försäkran om överensstämmelse

Vi, Grundfos, försäkrar under ansvar att produkterna DMI 208, som omfattas av denna försäkran, är i överensstämmelse med rådets direktiv om inbördes närmande till EU-medlemsstaternas lagstiftning, avseende:

– Maskindirektivet (2006/42/EG).
  Tillämpad standard: EN 809: 1998, EN ISO 12100-1+A1: 2009 och EN ISO 12100-2+A1: 2009.
– Lågspänningsdirektivet (2006/95/EG).*)
  Tillämpade standarder: EN 60204-1+A1: 2009.
– EMC-direktivet (2004/108/EG).
  Tillämpade standarder: EN 61000-6-2: 2005 och EN 61000-6-4: 2007.

*) Detta gäller bara för produkter med försörjningsspänning > 50 V AC eller > 75 V DC.

TR Uygunluk Bildirgesi

Grundfos olarak bu beyannameye konu olan DMI 208 ürünlerinin, AB Üyesi Ülkelerin kanunlarını birbirine yaklaştırma üzerine Konsey Direktifleriyle uyumlu olduğunun yalnızca bizim sorumluluğumuz altında olduğunu beyan ederiz:

– Makineler Yönetmeliği (2006/42/EC).
  Kullanılan standart: EN 809: 1998, EN ISO 12100-1+A1: 2009 ve EN ISO 12100-2+A1: 2009.
– Düşük Voltaj Yönetmeliği (2006/95/EC).*)
  Kullanılan standartlar: EN 60204-1+A1: 2009.
– EMC Diretifi (2004/108/EC).
  Kullanılan standartlar: EN 61000-6-2: 2005 ve EN 61000-6-4: 2007.

*) Bu sadece > 50 V AC ve > 75 V DC ürünler için geçerlidir.

CN 产品合格声明书

我们格兰富在我们的全权责任下声明，产品 DMI 208，即该合格证所指之产品，符合欧共体使其成员国法律趋于一致的以下欧共理事会指令：

– 机械设备指令 (2006/42/EC)。
  所用标准 : EN 809: 1998, EN ISO 12100-1+A1: 2009 和 EN ISO 12100-2+A1: 2009。
– 低电压指令 (2006/95/EC)。 *)
  所用标准 : EN 60204-1+A1: 2009。
– 电磁兼容性指令 (2004/108/EC)。
  所用标准 : EN 61000-6-2: 2005 和 EN 61000-6-4: 2007。

*) 仅适用于工作电压 > 50 VAC 或 > 75 VDC 的产品。

Pfinztal, 1st March 2011

ppa. U. Stemick

Ulrich Stemick
Technical Director
Grundfos Water Treatment GmbH
Reetzstr. 85, D-76327 Pfinztal, Germany

Person authorised to compile technical file and empowered to sign the EC declaration of conformity.

English (GB) Installation and operating instructions

Original installation and operating instructions.

CONTENTS

		Page
1.	**General information**	**6**
1.1	Introduction	6
1.2	Service documentation	6
1.3	Information about the product	6
1.4	Applications	10
1.5	Warranty	10
2.	**Safety**	**10**
2.1	Identification of safety instructions in this manual	10
2.2	Marking at the pump	10
2.3	Qualification and training of personnel	11
2.4	Risks when safety instructions are not observed	11
2.5	Safety-conscious working	11
2.6	Safety instructions for the operator/user	11
2.7	Safety instructions for maintenance, inspection and installation work	11
2.8	Unauthorised modification and manufacture of spare parts	11
2.9	Improper operating methods	11
2.10	Safety of the system in the event of a failure in the dosing system	11
3.	**Transport and intermediate storage**	**12**
3.1	Transport	12
3.2	Delivery	12
3.3	Unpacking	12
3.4	Intermediate storage	12
3.5	Return	12
4.	**Technical data**	**12**
4.1	Identification	12
4.2	Type key	13
4.3	General description	14
4.4	Dimensional sketches	17
4.5	Versions	19
4.6	Materials	19
4.7	Control data (with control unit)	20
5.	**Installation**	**20**
5.1	Installation location	20
5.2	Mounting	20
5.3	General information on installation	21
5.4	Dosing controller	24
5.5	Tube / pipe lines	24
6.	**Electrical connections**	**26**
6.1	Connecting the signal lines for DMI 208	27
6.2	Connecting the power supply cable	29
7.	**Start-up / shutdown**	**29**
7.1	Initial start-up / subsequent start-up	29
7.2	Operating the pump	32
7.3	Shutdown	32
8.	**Operation**	**33**
8.1	Control and display elements	33
8.2	Switching on/off	34
8.3	Operating the pump with control unit	34
8.4	Adjusting and locking the stroke length	35
8.5	Notes for stroke-length adjustment	35
8.6	Adjusting the zero point	36
8.7	Calibrating the dosing flow with Plus3 system	36
8.8	Pumps with manual deaeration	36
8.9	Changing the tank with Plus3 system	37
9.	**Maintenance**	**37**
9.1	General notes	37
9.2	Maintenance intervals	37
9.3	Cleaning suction and discharge valves	37
9.4	Replacing the diaphragm	39
10.	**Fault finding chart**	**40**
11.	**Dosing curves**	**42**
12.	**Disposal**	**45**

Warning

These complete installation and operating instructions are also available on www.Grundfosalldos.com.

Prior to installation, read these installation and operating instructions. Installation and operation must comply with local regulations and accepted codes of good practice.

1. General information

1.1 Introduction

These installation and operating instructions contain all the information required for starting up and handling the DMI 208 diaphragm dosing pump.

If you require further information or if any problems arise, which are not described in detail in this manual, please contact the nearest Grundfos company.

1.2 Service documentation

If you have any questions, please contact the nearest Grundfos company or service workshop.

1.3 Information about the product

1.3.1 Pump types

The DMI 208 dosing pump is available for a variety of performance ranges in various sizes:

Pump types
DMI 0.3-10
DMI 0.8-16
DMI 1.0-10
DMI 1.1-16
DMI 1.6-10
DMI 3.0-10
DMI 3.6-16
DMI 4.0-8
DMI 5.0-6
DMI 6.0-8
DMI 9.0-6
DMI 14-4
DMI 18-3.5

The following is indicated on the pump nameplate:

- The pump type which specifies the stroke volume, connection size and performance data (see below).
- The pump serial number which is used to identify the pump.
- The most important characteristics of the pump configuration, e.g. dosing head and valve materials. They are described in section *4. Technical data*.
- Maximum flow rate and maximum counter-pressure.
- Supply voltage or mains voltage and mains frequency.

Note ***The pump for viscous liquids is called HV variant in the following.***

1.3.2 Connection size

Pump type	Connection size	HV variant
DMI 0.3-10	DN 4	DN 4
DMI 0.8-16	Suction side DN 4 Discharge side DN 8	DN 8
DMI 1.0-10	DN 4	DN 8
DMI 1.1-16	Suction side DN 4 Discharge side DN 8	DN 8
DMI 1.6-10	DN 4	DN 8
DMI 3.0-10	DN 4	DN 8
DMI 3.6-16	Suction side DN 4 Discharge side DN 8	DN 8
DMI 4.0-8	DN 4	DN 8
DMI 5.0-6	DN 4	DN 8
DMI 6.0-8	DN 4	DN 8
DMI 9.0-6	DN 8	DN 8
DMI 14-4	DN 8	DN 8
DMI 18-3.5	DN 8	DN 8

1.3.3 Pump performance

Performance data at maximum pump counter-pressure

Applies to:

- water as dosing medium
- suction lift of 0.5 m
- fully deaerated dosing head
- maximum stroke length.

Pump type	Stroke volume V	50 Hz			60 Hz				
		Q**	p max.*	Max. stroke rate	Q**		p max.**		Max. stroke rate
	[cm³]	[l/h]	[bar]	[n/min]	[l/h]	[US gph]	[bar]	[psi]	[n/min]
DMI 0.3-10	0.04	0.3	10	120	0.36	0.095	10	145	144
DMI 0.8-16	0.11	0.8	16	120	0.96	0.254	16	232	144
DMI 1.0-10	0.14	1.0	10	120	1.20	0.317	10	145	144
DMI 1.1-16	0.15	1.1	16	120	1.32	0.349	16	232	144
DMI 1.6-10	0.22	1.6	10	120	1.92	0.507	10	145	144
DMI 3.0-10	0.42	3.0	10	120	3.50	0.925	7	102	144
DMI 3.6-16	0.50	3.6	16	120	4.32	1.14	13	189	144
DMI 4.0-8	0.55	4.0	8	120	4.8	1.27	8	116	144
DMI 5.0-6	0.69	5.0	6	120	6	1.58	5	72.5	144
DMI 6.0-8	0.84	6.0	8	120	7.2	1.902	6	87	144
DMI 9.0-6	1.24	9.0	6	120	10.8	2.853	5.5	80	144
DMI 14-4	1.92	14.0	4	120	16.8	4.439	3	44	144
DMI 18-3.5	2.5	18.0	3.5	120	21.6	5.7	3	44	144

* p max. applies to dosing heads without automatic deaeration; with automatic deaeration 1 bar less. Observe the maximum permissible temperatures and that the friction loss increases with the viscosity of the dosing medium.

** The maximum dosing flow of pumps with automatic deaeration or Plus³ system is approx. 0.1 to 0.4 l/h lower, depending on pump type.
The maximum dosing flow of HV-variant pumps is up to 10 % lower.

Note

The pump can be operated in the range between 1 % and 100 % of the maximum dosing capacity.

1.3.4 Accuracy

- Dosing flow fluctuation: ± 1.5 % within the control range 1:10
- Linearity deviation*: ± 4 % of the full-scale value. Adjustment from max. to min. stroke length, within the control range 1:5
- Applies to:
  – water as dosing medium
  – fully deaerated dosing head
  – standard pump version.
- Construction tolerance: according to VDMA 24284.

* Higher linearity deviation for pumps with automatic deaeration or Plus^3 system.

1.3.5 Inlet pressure and counter-pressure / suction lift during operation

Maximum inlet pressure

Pump type	Pump version		
	Standard	With automatic deaeration	With Plus^3 system
	[bar]	[bar]	[bar]
DMI 0.3-10 - DMI 18-3.5	0.2	No flooded suction, no positive inlet pressure!	

Minimum counter-pressure at the pump discharge valve

Pump type	Pump version		
	Standard	With automatic deaeration	With Plus^3 system
	[bar]	[bar]	[bar]
DMI 0.3-10 - DMI 18-3.5	1	1	1

Maximum suction lift* (start-up) for media with a viscosity similar to water

Pump type	Pump version		
	Standard	With automatic deaeration	With Plus^3 system
	[m]	[m]	[m]
DMI 0.3-10	Flooded suction	—	**
DMI 0.8-16	1.0	—	
DMI 1.0-10	1.0	1.0	**
DMI 1.1-16	1.0		
DMI 1.6-10	1.5		
DMI 3.0-10	2.0		
DMI 3.6-16	2.0		
DMI 4.0-8	2.2		
DMI 5.0-6	2.5	1.0	—
DMI 6.0-8	2.8	1.0	**
DMI 9.0-6	2.8	1.0	—
DMI 14-4			
DMI 18-3.5			

* Deaeration valve open.

** Pumps with Plus^3 system are delivered with a special start-up device.

Maximum suction lift* (continuous operation) for media with a viscosity similar to water

Pump type	Pump version		
	Standard	With automatic deaeration	With Plus^3 system
	[m]	[m]	[m]
DMI 0.3-10	Flooded suction	—	1.5
DMI 0.8-16 - DMI 18-3.5	6	1.5	1.5

* Dosing head and valves moistened.

1.3.6 Sound pressure level

45 dB(A), testing according to DIN 45635-01-KL3.

1.3.7 Enclosure class

- DMI 208 Inside: IP 20.
- Pump with mains plug: IP 65.
- Pump without mains plug: IP 65 can only be ensured if the power supply cable is connected with IP 65 protection.

- Pumps with electronics: The enclosure class is only met if the sockets are protected! The data regarding the enclosure class applies to pumps with correctly inserted plugs or screwed-on caps.

1.3.8 Required energy

Power supply for AC voltage

- Rated voltage: 110 / 115 V or 230 / 240 V. Deviation from the rated value: ± 10 %.
- Supply voltage: 24 V. Deviation from the rated value: ± 15 %.
- Mains frequency: 50/60 Hz.
- Maximum input power: 22 W (reduced input power according to pump type and connected sensors).

Caution ***The power supply must be electrically isolated from the signal inputs and outputs.***

EMC protection

Tested according to DIN EN 50082-2,
DIN V ENV 50140, DIN EN 50141,
DIN V ENV 50204, DIN EN 55022 class B,
DIN EN 61000-4-2, DIN EN 61000-4-5.

Mains impedance

Electromagnetic compatibility (EMC) according to the 89/336/EEC directive:

- EN 61000-3-2: 2000 (limit values for harmonic currents (device input current) ≤ 16 A per conductor).
- EN 61000-3-3: 2002 (limitation of voltage fluctuations and flickers in public low-voltage distribution networks for devices with a rated current ≤ 16 A per conductor, which do not require a special connection).
- EN 61000-6-2: 2001 (generic standard for immunity to interference for the industrial sector).
- EN 61000-6-4: 2001 (generic standard for emitted interference for the industrial sector).

1.3.9 Ambient and operating conditions

- Permissible ambient temperature: 0 °C to +40 °C.
- Permissible storage temperature: –10 °C to +50 °C.
- Permissible air humidity: max. relative humidity: 92 % (non-condensing).

Warning

The DMI 208 is NOT approved for operation in potentially explosive areas!

Caution ***The installation site must be under cover!***
Ensure that the enclosure class of motor and pump is not affected by the atmospheric conditions.

Pumps with electronics are only suitable for indoor use! Do not install outdoors!

1.3.10 Dosing medium

Caution ***In the event of questions regarding the material resistance and suitability of the pump for specific dosing media, please contact Grundfos Alldos.***

The dosing medium must have the following basic characteristics:

- liquid
- non-abrasive
- non-inflammable.

For degassing dosing media, note the following:

- The DMI 208 with automatic deaeration can be used for degassing, non-crystallising media such as H_2O_2. Do not use this pump for chlorine bleaching agents!
- The DMI 208 with Plus^3 system can be used for moderately degassing media such as chlorine bleaching agents. Do not use this pump for H_2O_2!

Maximum permissible viscosity at operating temperature*

Pump type	Pump version			
	Standard	With automatic deaeration	With Plus^3 system	HV variant
	[mPa s]	[mPa s]	[mPa s]	[mPa s]
DMI 0.3-10	200	—	100	500
DMI 0.8-16	200	—	100	500
DMI 1.0-10	200	50	100	500
DMI 1.1-16	200	50	100	500
DMI 1.6-10	200	50	100	500
DMI 3.0-10	200	50	100	500
DMI 3.6-16	200	50	100	500
DMI 4.0-8	200	50	100	500
DMI 5.0-6	100	50	—	500
DMI 6.0-8	100	50	50	500
DMI 9.0-6	150	50	—	200
DMI 14-4	150	50	—	200
DMI 18-3.5	150	50	—	200

* The stated values are approximate values and apply to Newtonian liquids.
Note that the viscosity increases with decreasing temperature!

Permissible media temperature

Dosing head material	Min. media temperature	Max. media temperature p < 10 bar	Max. media temperature p < 16 bar
	[°C]	[°C]	[°C]
PVC	0	40	20
Stainless steel, DIN 1.4571*	–10	70	70
PP	0	40	20
PVDF**	–10	60*	20

* A temperature of 120 °C at a counter-pressure of max. 2 bar is permitted for a short period (15 minutes).
** At 70 °C, the maximum counter-pressure is 3 bar.

Warning
Observe the chemical manufacturer's safety instructions when handling chemicals!

Caution
The dosing medium must be in liquid form!
Observe the freezing and boiling points of the dosing medium!

Caution
The resistance of the parts that come into contact with the media depends on the media, media temperature and operating pressure. Ensure that parts in contact with the media are chemically resistant to the dosing medium under operating conditions!
Make sure that the pump is suitable for the actual dosing medium!

1.4 Applications

1.4.1 Appropriate, acceptable and correct usage

The DMI 208 pump is suitable for liquid, non-abrasive and non-inflammable media strictly in accordance with the instructions in this manual.

Warning
Other applications or the operation of pumps in ambient and operating conditions, which are not approved, are considered improper and are not permitted. Grundfos accepts no liability for any damage resulting from incorrect use.

1.5 Warranty

Warranty in accordance with our general terms of sale and delivery is only valid,

- if the pump is used in accordance with the information within this manual.
- if the pump is not dismantled or incorrectly handled.
- if repairs are carried out by authorised and qualified personnel.
- if original spare parts are used for repairs.

2. Safety

This manual contains general instructions that must be observed during installation, operation and maintenance of the pump. This manual must therefore be read by the installation engineer and the relevant qualified personnel/operators prior to installation and start-up, and must be available at the installation location of the pump at all times.

It is not only the general safety instructions given in this "Safety" section that must be observed, but also all the specific safety instructions given in other sections.

2.1 Identification of safety instructions in this manual

If the safety instructions or other advice in this manual are not observed, it may result in personal injury or malfunction and damage to the pump. The safety instructions and other advice are identified by the following symbols:

Warning
If these safety instructions are not observed, it may result in personal injury!

Caution
If these safety instructions are not observed, it may result in malfunction or damage to the equipment!

Note
Notes or instructions that make the job easier and ensure safe operation.

Information provided directly on the pump, e.g. labelling of fluid connections, must be observed and must be maintained in a readable condition at all times.

2.2 Marking at the pump

The pumps with Plus[3] system are provided with the following danger notice:

Beware of caustic liquids!
Risk of causticisation by the dosing medium!
If the pump is filled, keep the cover closed and do not touch inside the priming chamber!
Before dismantling and transporting the pump, empty the priming chamber completely and clean it, if necessary!

2.3 Qualification and training of personnel

The personnel responsible for the operation, maintenance, inspection and installation must be appropriately qualified for these tasks. Areas of responsibility, levels of authority and the supervision of the personnel must be precisely defined by the operator.

If the personnel do not have the necessary knowledge, the necessary training and instruction must be given. If necessary, training can be performed by the manufacturer/supplier at the request of the operator of the pump. It is the responsibility of the operator to make sure that the contents of this manual are understood by the personnel.

2.4 Risks when safety instructions are not observed

Non-observance of the safety instructions may have dangerous consequences for the personnel, the environment and the pump. If the safety instructions are not observed, all rights to claims for damages may be lost.

Non-observance of the safety instructions may lead to the following hazards:

- failure of important functions of the pump/system
- failure of specified methods for maintenance
- harm to humans from exposure to electrical, mechanical and chemical influences
- damage to the environment from leakage of harmful substances.

2.5 Safety-conscious working

The safety instructions in this manual, applicable national health and safety regulations and any operator internal working, operating and safety regulations must be observed.

2.6 Safety instructions for the operator/ user

Hazardous hot or cold parts on the pump must be protected to prevent accidental contact.

Leakages of dangerous substances (e.g. hot, toxic) must be disposed of in a way that is not harmful to the personnel or the environment. Legal regulations must be observed.

Damage caused by electrical energy must be prevented (for more details, see for example the regulations of the VDE and the local electricity supply company).

2.7 Safety instructions for maintenance, inspection and installation work

The operator must ensure that all maintenance, inspection and installation work is carried out by authorised and qualified personnel, who have been adequately trained by reading this manual.

All work on the pump should only be carried out when the pump is stopped. The procedure described in this manual for stopping the pump must be observed.

Pumps or pump units which are used for media that are harmful to health must be decontaminated.

All safety and protective equipment must be immediately restarted or put into operation once work is complete.

Observe the points described in the initial start-up section prior to subsequent start-up.

Warning

Electrical connections must only be carried out by qualified personnel!

The pump housing must only be opened by personnel authorised by Grundfos Alldos!

2.8 Unauthorised modification and manufacture of spare parts

Modification or changes to the pump are only permitted following agreement with the manufacturer. Original spare parts and accessories authorised by the manufacturer are safe to use. Using other parts can result in liability for any resulting consequences.

2.9 Improper operating methods

The operational safety of the supplied pump is only ensured if it is used in accordance with section *1. General information*. The specified limit values must under no circumstances be exceeded.

2.10 Safety of the system in the event of a failure in the dosing system

DMI 208 dosing pumps are designed according to the latest technologies and are carefully manufactured and tested. However, a failure may occur in the dosing system. Systems in which dosing pumps are installed must be designed in such a way that the safety of the entire system is still ensured following a failure of the dosing pump. Provide the relevant monitoring and control functions for this.

3. Transport and intermediate storage

3.1 Transport

Caution ***Do not throw or drop the pump.***

3.2 Delivery

The DMI 208 dosing pump is delivered in a cardboard box. Place the pump in the packaging during transport and intermediate storage.

3.3 Unpacking

Retain the packaging for future storage or return, or dispose of the packaging in accordance with local regulations.

3.4 Intermediate storage

- Permissible storage temperature: –10 °C to +50 °C.
- Permissible air humidity: max. relative humidity: 92 % (non-condensing).

3.5 Return

Return the pump in its original packaging or equivalent.

The pump must be thoroughly cleaned before it is returned or stored. It is essential that there are no traces of toxic or hazardous media remaining on the pump.

Caution ***Grundfos accepts no liability for damage caused by incorrect transportation or missing or unsuitable packaging of the pump!***

Before returning the pump to Grundfos for service, the **safety declaration** at the end of these instructions must be filled in by authorised personnel and attached to the pump in a visible position.

Caution ***If a pump has been used for a medium which is injurious to health or toxic, the pump will be classified as contaminated.***

If Grundfos is requested to service the pump, it must be ensured that the pump is free from substances that can be injurious to health or toxic. If the pump has been used for such substances, the pump must be cleaned before it is returned.

If proper cleaning is not possible, all relevant information about the chemical must be provided.

If the above is not fulfilled, Grundfos can refuse to accept the pump for service. Costs of returning the pump are paid by the customer.

The safety declaration can be found at the end of these instructions.

Caution ***The replacement of the power supply cable must be carried out by an authorised Grundfos service workshop.***

4. Technical data

4.1 Identification

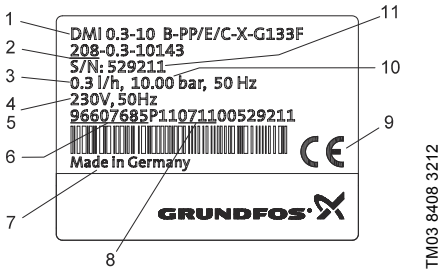

Fig. 1 DMI 208 nameplate

Pos.	Description
1	Type designation
2	Model
3	Maximum capacity [l/h]
4	Voltage [V]
5	Frequency [Hz]
6	Product number
7	Country of origin
8	Year and week code
9	Marks of approval, CE mark, etc.
10	Maximum pressure [bar]
11	Serial number

4.2 Type key

Example: DMI 1.6 - 10 A PVC /V /G -T -H 1 33 B

Type range

DMI

Maximum flow [l/h]

Maximum counter-pressure [bar]

Control variant

B	Without external control interface
A	Internal frequency control, external contact signal control
AR	Internal frequency control, external contact signal control, alarm relay

Dosing head variant

PP	Polypropylene
PV	PVDF (polyvinylidene fluoride)
PVC	Polyvinyl chloride
SS	Stainless steel, DIN 1.4401
PP-P3	PP with Plus[3]
PVC-P3	PVC with Plus[3]

Gasket material

E	EPDM (ethylene propylene diene monomer)
V	FKM
T	PTFE

Valve ball material

C	Ceramics
G	Glass
T	PTFE
SS	Stainless steel, DIN 1.4401

Control panel position

T	Top-mounted
X	No control panel

Supply voltage

G	1 x 230 V, 50/60 Hz
H	1 x 120 V, 50/60 Hz

Mains plug

X	No plug
F	EU (Schuko)
B	USA, Canada
I	Australia, New Zealand, Taiwan
E	Switzerland

Connection, suction/discharge

B6	Pipe, 4/6 mm
3	Tube, 4/6 mm
A5	Tube, 5/8 mm
4	Tube, 6/9 mm
6	Tube, 9/12 mm
C4	Tube, 1/8" / 1/4"
R	Tube, 1/4" / 3/8"
S	Tube, 3/8" / 1/2"
A	Threaded, Rp 1/4, female
V	Threaded, 1/4" NPT, female
A9	Threaded, 1/2" NPT, male
B1	Tube 6/12 mm/ cementing d. 12 mm
B3	Welding d. 16 mm

Valve type

1	Standard
2	Spring-loaded 0.05 bar suction opening pressure; 0.05 bar discharge opening pressure
3	Spring-loaded 0.05 bar suction opening pressure; 0.8 bar discharge opening pressure
4	Spring-loaded, discharge side only 0.8 bar opening pressure

4.3 General description

The DMI 208 is a dosing pump with an overload-protected synchronous motor (which does not blow when blocked).

The DMI 208 is available in various versions, see also section *1. General information*.

In the general description, a distinction is made between pumps with dosing heads with the following features:

- manual deaeration (standard)
- valve for automatic deaeration
- Plus[3] system
- diaphragm leakage detection.

Option:

The pump can also be equipped with a dosing controller.

The functions are described, but only apply to the relevant pump version.

4.3.1 DMI 208 with manual deaeration (DMI 0.3-10 - DMI 18-3.5) and with valve for automatic deaeration for non-crystallising, degassing media (H_2O_2) (only for DMI 1.0-10 - DMI 18-3.5)

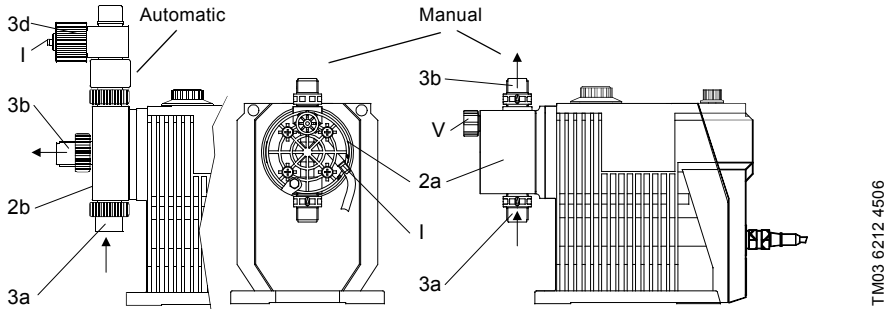

Fig. 2 DMI 208 with valve for automatic deaeration / with manual deaeration

Pos.	Components
3a	Suction valve
3b	Discharge valve
2a	Dosing head with manual deaeration
2b	Dosing head with automatic deaeration
I	Connection for deaeration line
V	Deaeration screw for manual deaeration
3d	Valve for automatic deaeration

4.3.2 DMI 208 Plus^3 system with priming and calibration system for moderately degassing liquids (chlorine bleaching agents) (only for DMI 0.3-10 to DMI 4.0-8 / DMI 6.0-8)

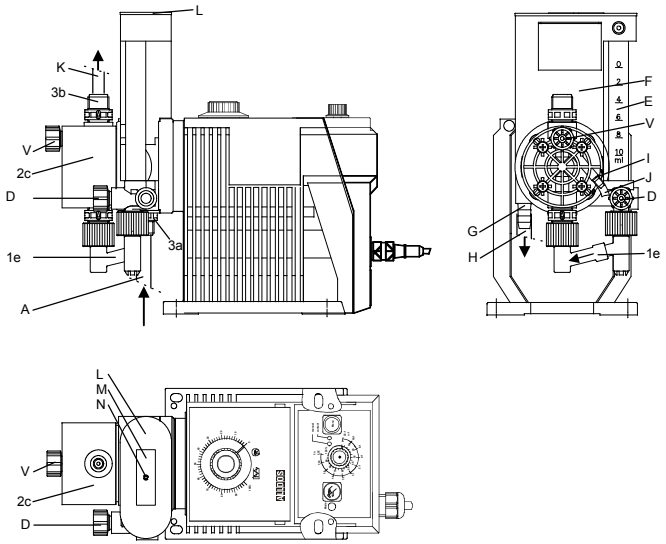

TM03 6213 4506

Fig. 3 DMI 208 Plus^3 system

Pos.	Components
3a	Suction valve
3b	Discharge valve
2c	Dosing head Plus^3 system
I	Connection for deaeration line
V	Deaeration screw
A	Suction line from tank
1e	Line from calibration tube (E) to dosing head (2c)
D	Isolating valve at calibration tube (E)
E	Calibration tube
F	Priming chamber
G	Connection for overflow line (H)
H	Overflow line to tank (PVC tube 8/11)
J	Deaeration line to tank
K	Discharge line
L	Cover
M	Adhesive label
N	Deaeration hole

4.3.3 Functional principle of the Plus^3 system

Plus^3 system in operation:

- The priming chamber (F) is filled with the dosing medium via the suction valve (3a).
  - The calibration tube (E) is filled from the priming chamber.
  - Unused dosing medium flows back into the tank via the overflow line (H).
- The dosing medium flows from the calibration tube (E) to the discharge valve (3b) via the small dosing diaphragm.

Note ***The isolating valve (D) must be open during operation!***

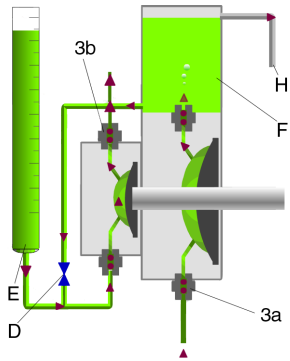

TM03 6214 4506

Fig. 4 Functional principle of the Plus^3 system

4.3.4 DMI 208 with diaphragm leakage detection

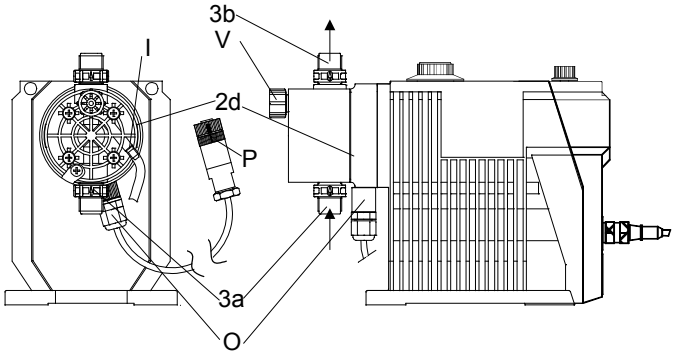

TM03 6215 4506

Fig. 5 DMI 208 with diaphragm leakage detection

Pos.	Components
3a	Suction valve
3b	Discharge valve
2d	Dosing head with flange for diaphragm leakage detection
I	Connection for deaeration line
V	Deaeration screw for manual deaeration
O	Opto-sensor
P	M12 plug for socket 1

4.3.5 Functional principle of diaphragm leakage detection

Pumps with diaphragm leakage detection have a special dosing head flange for an optoelectronic sensor. The pump is supplied with the diaphragm leakage sensor already installed.

The optoelectronic sensor contains:

- infrared transmitter
- infrared receiver.

TM03 6216 4506

Fig. 6 Diaphragm leakage sensor

If the diaphragm leaks,

- the liquid enters the dosing head flange.
- the light refraction changes.
- the sensor emits a signal.

The control unit operates two contacts, which can be used, for example, to trigger an alarm signal or to switch off the pump.

4.3.6 Dosing controller (without Plus^3 system)

The dosing controller monitors the dosing process and emits a pulse for each suction stroke.

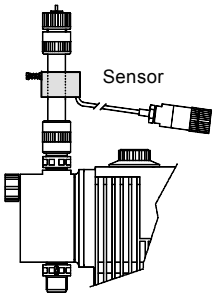

TM03 6217 4506

Fig. 7 Dosing controller

4.3.7 HV variant for liquids which are more viscous than water

All HV-variant pumps are equipped with spring-loaded valves, some have a larger nominal diameter and adapters.

Note

Note that the HV-variant pump has other dimensions and that other connection line dimensions might be required!

4.4 Dimensional sketches

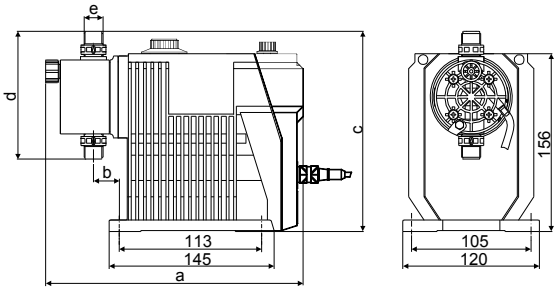

TM03 6218 4506

Fig. 8 DMI 208

Dimensions for DMI 208

	a [mm]	b [mm]	c [mm]	d [mm]	e	c HV [mm]	d HV [mm]	e HV
DMI 0.3-10	225	20.7	175.5	112	G 3/8	175.5	112	G 3/8
DMI 0.8-16 - DMI 6.0-8	225	20.7	175.5	112	G 3/8	207.5	176	G 5/8
DMI 9.0-6 - DMI 18-3.5	230	26.7	184.5	133	G 5/8	184.5	133	G 5/8

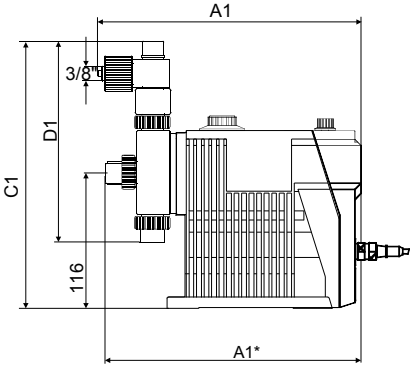

TM03 6219 4506

Fig. 9 DMI 1.0-10 - DMI 18-3.5 with valve for automatic deaeration

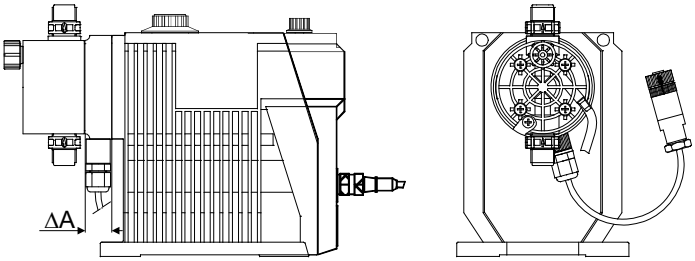

TM03 6220 4506

Fig. 10 DMI 208 with diaphragm leakage detection

Dimensions for DMI 208 with automatic deaeration / diaphragm leakage detection

	A1 [mm]	A1* [mm]	C1 [mm]	D1 [mm]	DA [mm]
DMI 0.3-10	—	—	—	—	11
DMI 0.8-16 - DMI 6.0-8	223	218	221.6	161	11
DMI 9.0-6 - DMI 18-3.5	230	244	226.6	175	11

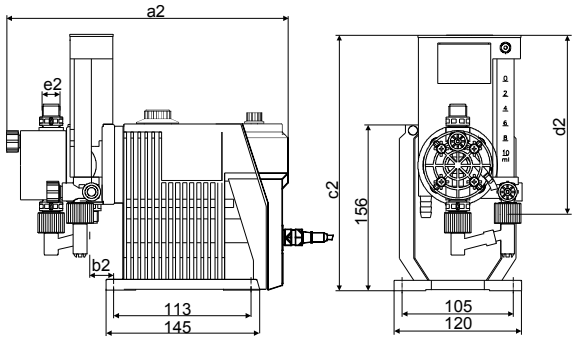

TM03 6221 4506

Fig. 11 DMI 0.3-10 - DMI 4.0-8 / DMI 6.0-8 with Plus^3 system

Dimensions for DMI 0.3-10 - DMI 4.0-8 / DMI 6.0-8 with Plus^3 system

	a2 [mm]	b2 [mm]	c2 [mm]	d2 [mm]	e2
DMI 0.3-10 DMI 6.0-8	261	25.2	251	197.5	G 3/8

4.5 Versions

4.5.1 Standard version of control unit

Function of control unit		A	AR
Relay function	Output socket 3	—	Stroke
Remote on/off	Input socket 4	NO	NO
Pre-empty signal	Input socket 5	NO	NO
Empty signal	Input socket 5	NO	NO
Error signal	Output socket 3	—	NO
Relay	Output socket 3	—	NO
Contact signal	Input socket 4	x	x
Hall sensor		—	—

Other settings for the AR control unit are available on request.

NO: normally open

Warning

Observe the manufacturer's safety instructions when handling chemicals!

Caution

The resistance of the parts that come into contact with the media depends on the media, media temperature and operating pressure. Ensure that parts in contact with the medium are chemically resistant to the dosing medium under operating conditions!

Note

Further information on resistance with regard to the media, media temperature and operating pressure is available on request.

4.6 Materials

Pump housing material

Pump and control unit housing: s PS FR GF 22 (glass-fibre-reinforced polystyrene).

4.7 Control data (with control unit)

Functions of pumps with control unit:

- "continuous operation" button for function test and dosing head deaeration
- memory function (stores a maximum of 65,000 pulses) (optional)
- two-stage tank-empty signal (e.g. via Grundfos tank-empty sensor)
- stroke signal/pre-empty signal (optional)
- remote on/off.

Operating modes:

- manual
  Stroke frequency: manually adjustable
- contact signal control
  Multiplier (1:n) and divisor (n:1) (optional).

Inputs and outputs

Inputs	
Contact signal	Maximum load: 12 V, 5 mA Minimum pulse length: 10 ms Minimum pause time: 10 ms
Remote on/off	Maximum load: 12 V, 5 mA
Tank-empty signal	Maximum load: 12 V, 5 mA

Outputs (with AR control unit)	
Error signal	Maximum ohmic load: 50 VDC / 75 VAC, 0.5 A
Stroke signal	Contact time/stroke: 200 ms
Pre-empty signal	Maximum ohmic load: 50 VDC / 75 VAC, 0.5 A

5. Installation

5.1 Installation location

5.1.1 Space required for operation and maintenance

Note ***The pump must be installed in a position where it is freely accessible during operation and maintenance work.***

The control elements must be freely accessible during operation.

Maintenance work on the dosing head and the valves must be carried out regularly.

Provide sufficient space for removing the dosing head and the valves.

5.1.2 Permissible ambient influences

Permissible ambient temperature: 0 °C to +40 °C.

Permissible air humidity: max. relative humidity: 92 % (non-condensing).

Caution ***The installation site must be under cover!***
Ensure that the enclosure class of motor and pump is not affected by the atmospheric conditions.
Pumps with control unit are only suitable for indoor use! Do not install outdoors!

5.1.3 Mounting surface

The pump must be mounted on a flat surface.

5.2 Mounting

Caution ***Carefully tighten the screws, otherwise the plastic housing may be damaged.***

5.2.1 Horizontal mounting

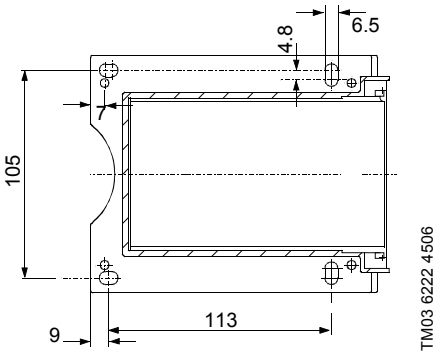

Fig. 12 Drilling scheme

- Use four M6 screws to mount the pump on the tank or on a console so that the suction valve is at the bottom and the discharge valve is at the top (dosing always flows upwards).

5.2.2 Vertical mounting

Note ***Pumps with Plus^3 system must not be mounted vertically!***

1. Mount the pump on a vertical surface (e.g. a wall) using four M6 screws.
2. Unscrew the dosing head (four inner dosing head screws (1q + 2q)).
3. Turn the intermediate ring (4q) so that the discharge hole points downwards.
4. Turn the dosing head 90 ° so that the suction valve is at the bottom and the discharge valve is at the top (dosing always flows upwards).
5. Cross-tighten the screws using a torque wrench. Maximum torque:
   DMI 0.3 - DMI 6.0: 2.1 Nm.
   DMI 9.0 - DMI 18: 2.5 Nm.

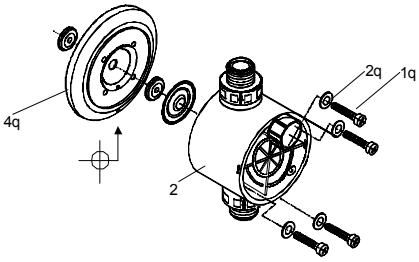

Fig. 13 Vertical mounting

5.2.3 Mounting of DMI 208 Inside

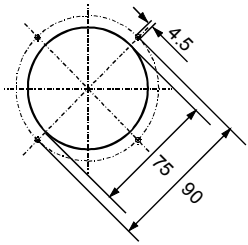

Fig. 14 Drilling scheme

1. Cut a circular hole with a diameter of 75 mm.
2. Drill four holes with a diameter of 4.5 mm according to the drilling scheme.
3. Unscrew the suction and discharge valves from the dosing head.
4. Insert the pump with the dosing head in the opening so that dosing flows upwards.
5. Use the screws provided to fix the flange to the mounting surface.
6. Screw on the suction and discharge valves.

5.2.4 Diaphragm leakage detection

With diaphragm leakage detection:

- Screw the sensor from the bottom into the opening in the dosing head flange.

5.3 General information on installation

Warning

Observe the specifications for the installation location and range of applications described in section 1. General information.

Warning

Faults, incorrect operation or faults on the pump or system can, for example, lead to excessive or insufficient dosing, or the permissible pressure may be exceeded. Consequential faults or damage must be evaluated by the operator and appropriate precautions must be taken to avoid them!

5.3.1 Installation examples

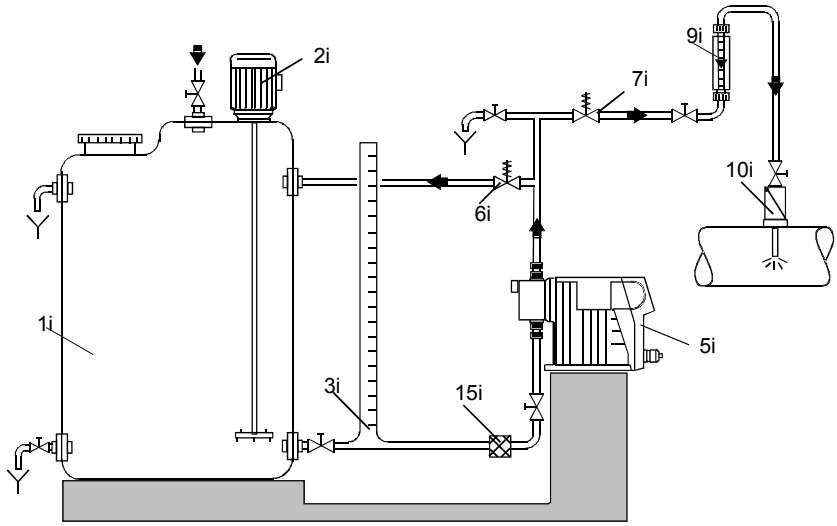

Fig. 15 Installation example of pump with manual deaeration

Pos.	Components
1i	Dosing tank
2i	Electric agitator
3i	Extraction device
5i	Dosing pump
6i	Relief valve
7i	Pressure-loading valve
9i	Calibration tube
10i	Injection unit
15i	Filter

For pumps with Plus^3 system:

- No flooded suction!
- Minimum injection pressure on the discharge side.
- The pressure at the discharge valve must be at least 1 bar higher than the pressure at the suction valve.

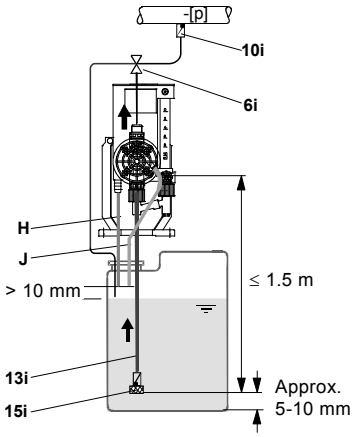

Fig. 16 Installation example of pump with Plus^3 system

For pumps with valve for automatic deaeration:

- Flooded suction only during start-up.

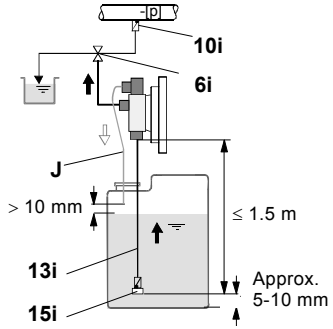

Fig. 17 Installation example of pump with valve for automatic deaeration

Pos.	Components
13i	Suction line with foot valve
6i	Relief valve
10i	Injection point
15i	Filter
H	Overflow line
J	Deaeration line

5.3.2 Installation tips

- For non-degassing media with a viscosity similar to water, the pump can be mounted on the tank (observe the permissible suction lift).
- Flooded suction preferred (not with Plus^3 system).
- For media with a tendency to sedimentation, install the suction line with filter (15i) so that the suction valve remains a few millimetres above the possible level of sedimentation.

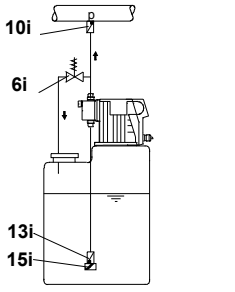

Fig. 18 Tank installation

With open outflow of the dosing medium or low counter-pressure

A positive pressure difference of at least 1 bar must be ensured between the counter-pressure at the injection point and the pressure of the dosing medium at the pump suction valve.

- If this cannot be ensured, install a pressure-loading valve (7i) immediately before the outlet or the injection unit.

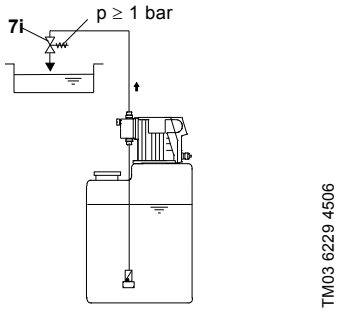

Fig. 19 Installation with pressure-loading valve

- To avoid the siphon effect, install a pressure-loading valve (7i) in the discharge line and, if necessary, a solenoid valve (14i) in the suction line.

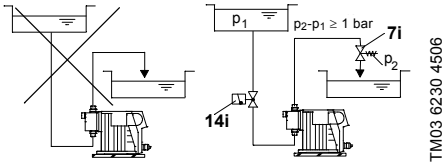

Fig. 20 Installation to avoid the siphon effect

- To protect the dosing pump against excessive pressure build-up, install a relief valve (6i) in the discharge line.
- For degassing media:
  – Flooded suction (not with Plus^3 system).
  – Install a filter (15i) in the suction line to prevent the valves being contaminated.

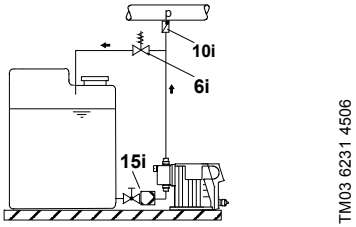

Fig. 21 Installation with relief valve and filter

- When installing the suction line, observe the following:
  - Keep the suction line as short as possible. Prevent it from becoming tangled.
  - If necessary, use swept bends instead of elbows.
  - Always route the suction line up towards the suction valve.
  - Avoid loops as they may cause air bubbles.

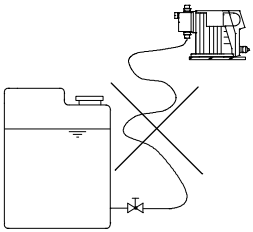

TM03 6232 4506

Fig. 22 Installation of suction line

- In the case of long discharge lines, install a non-return valve (12i) in the discharge line.

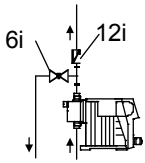

TM03 6233 4506

Fig. 23 Installation with non-return valve

Pos.	Components
1i	Dosing tank
2i	Electric agitator
3i	Extraction device
5i	Dosing pump
6i	Relief valve
7i	Pressure-loading valve
9i	Calibration tube
10i	Injection unit
15i	Filter

5.4 Dosing controller

Using a dosing controller

- Screw the dosing controller onto the discharge valve.
- Connect the discharge line to the dosing controller.

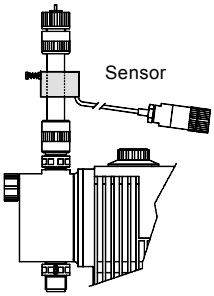

TM03 6217 4506

Fig. 24 Dosing controller

5.5 Tube / pipe lines

5.5.1 General

Warning

To protect the dosing pump against excessive pressure build-up, install a relief valve in the discharge line.

All lines must be free from strain! Avoid loops and buckles in the tubes! Keep the suction line as short as possible!

The flow must run in the opposite direction to gravity!

Observe the manufacturer's safety instructions when handling chemicals!

Caution

The resistance of the parts that come into contact with the media depends on the media, media temperature and operating pressure. Ensure that parts in contact with the media are chemically resistant to the dosing medium under operating conditions!

Only use the specified line types!

With Plus^3 system

- Use the suction line with foot valve and empty signal.
- For degassing media, maintain a maximum suction lift of 1.5 m.
- Open the isolating valve on the calibration system.
- Maximum suction line length:
  - 5 m for standard pumps or pumps with Plus^3 system when dosing media with a viscosity similar to water.
  - 1.5 m for pumps with valve for automatic deaeration.
  - 1.2 m when dosing media with higher viscosity.

5.5.2 Sizing of tube / pipe lines

Warning

PVC tube DN 4 is not suitable for use as a discharge line!

Connect PE tube DN 4 on the discharge side!

Warning

Observe the pressure stage of the used lines. The maximum permissible inlet pressure must not be exceeded!

Minimum internal diameter

Pump type	Pump version	
	Standard	HV variant
	[mm]	[mm]
DMI 0.3-10	4	Suction side: 5 Discharge side: 4
DMI 0.8-16	4	6
DMI 1.0-10		
DMI 1.1-16		
DMI 1.6-10		
DMI 3.0-10		
DMI 3.6-16		
DMI 4.0-8		
DMI 5.0-6		
DMI 6.0-8		
DMI 9.0-6	6	Suction side: 9 Discharge side: 6
DMI 14-4		
DMI 18-3.5		

5.5.3 Connecting the suction and discharge lines

Warning

All lines must be free from strain!

Only use the prescribed line types!

- Connect the suction line to the suction valve (3a).
  - Install the suction line in the tank so that the foot valve remains a few millimetres above the possible level of sedimentation.
- Connect the discharge line to the discharge valve (3b).

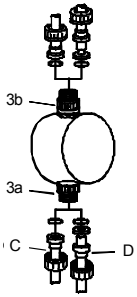

TM03 6235 4506

Fig. 25 Connecting the suction and discharge lines

Pos.	Components
3a	Suction valve
3b	Discharge valve
C	Pipe connection
D	Tube connection

5.5.4 Connecting the overflow and deaeration lines

Warning

Observe chemical resistance!

Note

HV-variant pumps have an assisting suction. In this case, prepare (cut) the deaeration line, but do not connect it yet!

For pumps with automatic deaeration and manual deaeration

The pump has a deaeration line (PVC 4/6).

- Connect the deaeration line (J) to the connection for the deaeration line (I).

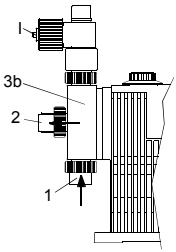

TM03 6236 4506

Fig. 26 Automatic deaeration

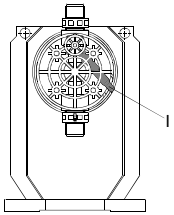

TM03 6237 4506

Fig. 27 Manual deaeration

For pumps with Plus^3 system

The pump has a deaeration line (PVC 4/6).

- Connect the deaeration line (J) to the connection for the deaeration line (I).
- Connect the overflow line (H) (PVC tube 8/11) to the connection (G).

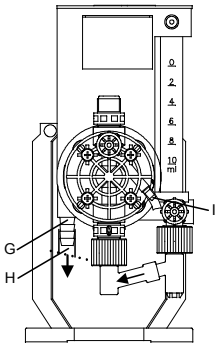

TM03 6238 4506

Fig. 28 Plus^3 system

5.5.5 Installing the overflow and deaeration lines

- Shorten the overflow line (H) and deaeration line (J) to at least 10 mm above the maximum tank level.
- Insert the overflow line (H) and deaeration line (J) downwards into the dosing tank or collection container. Avoid loops.

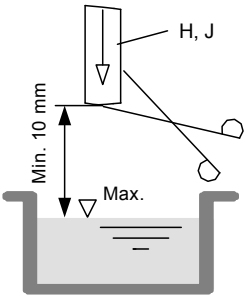

TM03 6239 4506

Fig. 29 Overflow and deaeration lines

Caution

Dosing medium can leak from the overflow and deaeration lines. Route both lines into a collection container or the tank!

Do not immerse the overflow line and deaeration line in the dosing medium!

Caution

Observe the pressure limits specified in section 1. General information!

6. Electrical connections

Make sure that the pump is suitable for the electricity supply on which it will be used.

Warning

Electrical connections must only be carried out by qualified personnel!

Disconnect the power supply before connecting the power supply cable and the relay contacts!

Observe the local safety regulations!

Warning

The pump housing must only be opened by personnel authorised by Grundfos Alldos!

Warning

Protect the cable connections and plugs against corrosion and humidity.

Only remove the protective caps from the sockets that are being used.

Caution

The power supply must be electrically isolated from the signal inputs and outputs.

6.1 Connecting the signal lines for DMI 208

6.1.1 Connecting the signal lines (with control unit)

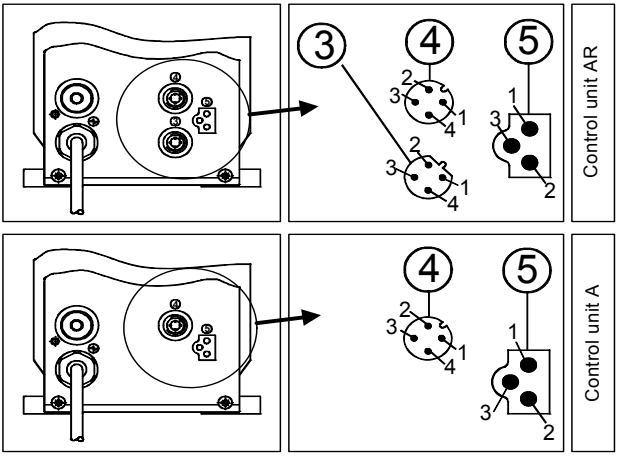

Fig. 30 Connection diagrams, control units A and AR

6.1.2 Stroke signal / pre-empty signal / error signal (with control unit AR)

Socket 3

Electrically isolated output for stroke signal or pre-empty signal and error signal.

Socket 3		Cable	Used for	
Pin	**Assignment**	**Wire colour**	**Stroke signal / pre-empty signal**	**Error signal**
1	Error signal contact	Brown		x
2	Stroke signal or pre-empty signal contact	White	x	
3	Stroke signal or pre-empty signal contact	Blue	x	
4	Error signal contact	Black		x

6.1.3 Remote on/off / contact input

Socket 4

For the remote on/off input and contact input.

If remote on/off and contact input are to be used at the same time, wire 1 is assigned twice.

Caution

For the connection of one cable, use a plug adapter with simple cable entry, for the connection of two cables, use a plug adapter with double cable entry, otherwise the protection will be lost!

Socket 4		Cable	Used for	
Pin	**Assignment**	**Wire colour**	**Remote on/off input**	**Contact input**
1	GND	Brown	x	x
2	Current input	White		
3	Remote on/off	Blue	x	
4	Contact input	Black		x

6.1.4 Empty signal / pre-empty and empty signal

Socket 5

For the empty signal or pre-empty and empty signal input.

The suction lines with empty signal or pre-empty and empty signal are pre-assembled with a plug for socket 5.

Socket 5		Used for	
Pin	**Assignment**	**Empty signal**	**Pre-empty signal**
1	Empty signal	x	
2	GND	x	x
3	Pre-empty signal		x

6.1.5 Accessories: cable and plug for DMI 208

Description	Product numbers
4-pole M12 plug, suitable for socket 3, with 2 m signal cable	96609017 / 321-206
4-pole M12 plug, suitable for socket 3, with 5 m signal cable	96609019 / 321-208
4-pole M12 plug, suitable for socket 4, with 2 m signal cable	96609014 / 321-205
4-pole M12 plug, suitable for socket 4, with 5 m signal cable	96609016 / 321-207
5-pole M12 plug, suitable for socket 4, screwed, without cable, with double cable entry	96609030 / 321-210
5-pole M12 plug, suitable for socket 4, screwed, without cable, with single cable entry	96609031 / 321-217
Extension cable, 5 m with 5-pole coupling for M12 plug	96609032 / 321-223

6.2 Connecting the power supply cable

Warning

Disconnect the power supply before connecting the power supply cable!

Before connecting the power supply cable, check that the rated voltage stated on the pump nameplate corresponds to the local conditions!

Do not make any changes to the power supply cable or plug!

Caution ***The pump can be automatically started by connecting the power supply!***

Caution ***The assignment between the plug-and-socket connection and the pump must be labelled clearly (e.g. by labelling the socket outlet).***

- Do not switch on the power supply until you are ready to start the pump.

6.2.1 Versions without mains plug

Warning

The pump must be connected to an external clearly labelled mains switch with a minimum contact gap of 3 mm in all poles.

- Connect the pump to the mains in accordance with local electrical installation regulations.

Warning

IP 65 can only be ensured if the power supply cable is connected with IP 65 protection (not for DMI 208 Inside!).

6.2.2 Version with mains plug

- Insert the mains plug in the mains socket.

6.2.3 DMI 208 Inside

- Connect the power supply cable according to the connection chart on the pump.

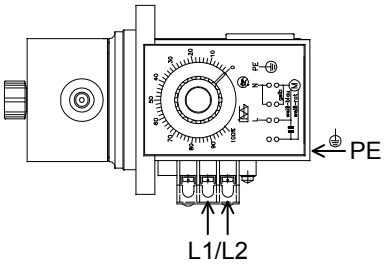

TM03 6241 4506

Fig. 31 Connection chart of DMI 208 Inside

7. Start-up / shutdown

Warning

Risk of chemical burns!

Wear protective clothing (gloves and goggles) when working on the dosing head, connections or lines!

Before each start-up, check the dosing head screws.

After initial start-up and after each time the diaphragm is changed, tighten the dosing head screws.

Caution ***After approximately 6-10 operating hours or two days, cross-tighten the dosing head screws using a torque wrench.***

Maximum torque:
DMI 0.3 - DMI 6.0: 2.1 Nm.
DMI 9.0 - DMI 18: 2.5 Nm.

Caution ***Adjust the stroke length only while the pump is running!***

7.1 Initial start-up / subsequent start-up

7.1.1 Checks before start-up

- Check that the rated voltage stated on the pump nameplate corresponds to the local conditions!
- Check that all connections are secure and tighten, if necessary.
- Check that the dosing head screws are tightened with the specified torque and tighten, if necessary.
- Check that all electrical connections are correct.

With Plus^3 system

- Open the isolating valve (D) at the calibration tube.

Caution ***Follow the notes for stroke-length adjustment for the relevant pump type!***

7.1.2 Assisting suction for Plus^3 system

Pumps with Plus^3 system have an assisting suction.

- Fit the syringe and the piece of hose.

TM03 6242 4506

Fig. 32 Assisting suction for Plus^3 system

Warning

Ensure that the pump is stopped!

Sucking in dosing medium using the assisting suction for Plus^3 system

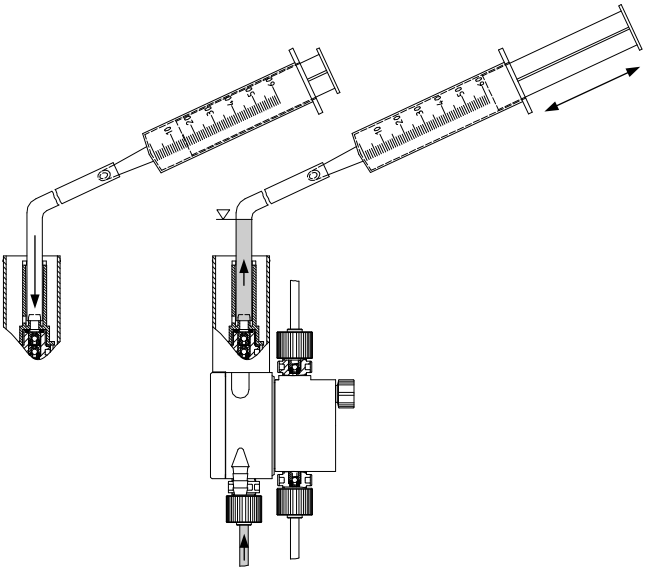

TM03 6243 4506

Fig. 33 Sucking in the dosing medium

1. Remove the cover from the priming chamber.
2. Push the hose as far as it will go into the valve tube.
3. Draw up the syringe in order to create a perceptible low pressure, and hold the syringe in this position.
4. Dosing medium rises in the suction line, through the valve tube to the suction hose.
5. Relieve the syringe.
6. Remove the syringe and hose and empty.
7. Close the cover.
   – For HV-variant pumps, see section *7.1.3 Assisting suction for HV variant*.
   – Pump without HV variant can now be started, see section *7.1.6 Starting pump without automatic deaeration*.

7.1.3 Assisting suction for HV variant

HV-variant pumps have an assisting suction.

- Fit the syringe and the piece of hose.

TM03 6244 4506

Fig. 34 Assisting suction for HV variant

Warning
Ensure that the pump is stopped!

Sucking in dosing medium using the assisting suction

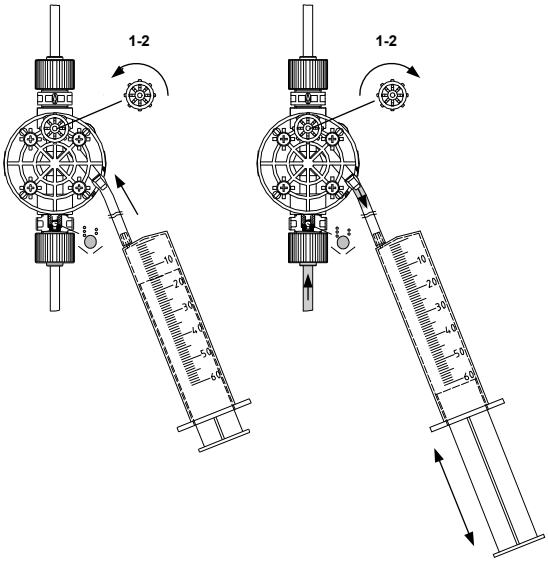

Fig. 35 Sucking in the dosing medium

1. Attach the hose to the connection for the deaeration line.
2. Open the deaeration screw, 1 or 2 turns.
3. Draw up the syringe in order to create a perceptible low pressure, and hold the syringe in this position.
4. Dosing medium rises in the suction line, up to the suction hose.
5. Relieve the syringe.
6. Carefully remove the syringe with the suction hose.
7. Empty the syringe into the dosing tank.
8. Tighten the deaeration screw.
9. Attach the deaeration line to the connection for the deaeration line. Observe the instructions in section *5.5.4 Connecting the overflow and deaeration lines*.
   – The pump can now be started, see section *7.1.6 Starting pump without automatic deaeration*.

7.1.4 Assisting suction for systems without Plus[3] system and without dosing medium flooded suction

At the dry suction/discharge valves:

1. Remove the suction line.
2. Hold a small container of water directly next to the suction valve and draw water until the dosing head is full.
3. Reinsert the suction line.

7.1.5 Assisting suction for pumps with valve for automatic deaeration

At the dry suction/discharge valves:

1. Take the suction line from the tank and mount a flexible hose on the suction valve.
2. Immerse the suction line and discharge line in the glass container (to the height of the dosing head).
3. Let the dosing pump run briefly.

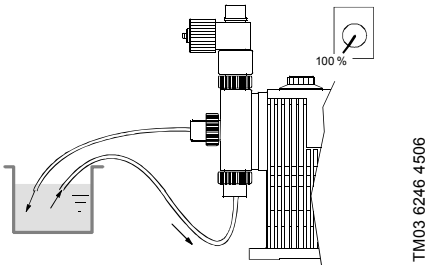

Fig. 36 Assisting suction for pumps with valve for automatic deaeration

7.1.6 Starting pump without automatic deaeration

1. Open the suction and discharge isolating valves, if installed.
2. Open the deaeration valve of the dosing head by approximately 1 or 2 turns.
3. Let the pump run in continuous operation:
   – Switch on the power supply.
   – Pumps with control unit: Press the "continuous operation" button and keep it pressed.
   – The pump switches to continuous operation at maximum stroke frequency.
   – Set the stroke-length adjustment knob to maximum.
4. Leave the pump running until the dosed medium is free of air bubbles.
5. Carefully close the deaeration valve.
   – The pump is now ready for operation.

7.1.7 Starting pump with automatic deaeration

For start-up, the dosing head and valves must be moistened!

1. Open the suction and discharge isolating valves, if installed.
2. Let the pump run in continuous operation:
   – Switch on the power supply.
   – Pumps with control unit: Press the "continuous operation" button and keep it pressed.
   – The pump switches to continuous operation at maximum stroke frequency.
   – Set the stroke-length adjustment knob to maximum.
3. Leave the pump running until the dosed medium is free of air bubbles.
   – The pump is now ready for operation.

7.1.8 After initial start-up of pumps with Plus^3 system

- After initial start-up, remove the adhesive label (M) from the cover (L), see fig. 3 and 37.

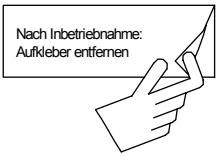

TM03 6247 4506

Fig. 37 Adhesive label

7.1.9 Tightening dosing head screws

Caution

After initial start-up and after each time the diaphragm is changed, tighten the dosing head screws.

After approximately 6-10 operating hours or two days, cross-tighten the dosing head screws using a torque wrench.

Maximum torque:
DMI 0.3 - DMI 6.0: 2.1 Nm.
DMI 9.0 - DMI 18: 2.5 Nm.

7.2 Operating the pump

Note

To operate the pump, refer to sections 8. Operation and 9. Maintenance, and if necessary, section 10. Fault finding chart in the event of a fault.

7.3 Shutdown

Warning

Risk of chemical burns!

Wear protective clothing (gloves and goggles) when working on the dosing head, connections or lines!

Do not allow any chemicals to leak from the pump. Collect and dispose of all chemicals correctly!

Note

If possible, rinse the dosing head before shutting down the pump, e.g. by supplying it with water.

7.3.1 Switching off / uninstalling

1. Switch off the pump and disconnect it from the power supply.
2. Depressurise the system.
3. Take suitable steps to ensure that the returning dosing medium is safely collected.
4. Carefully remove all lines.
5. Uninstall the pump.

7.3.2 Cleaning

1. Rinse all parts that have come into contact with the medium very carefully:
   – lines
   – valves
   – dosing head
   – diaphragm.
2. Remove any trace of chemicals from the pump housing.

7.3.3 Storage

Storage of the pump:

1. After cleaning (see above), carefully dry all parts and reinstall the dosing head and valves, or
2. change the valves and diaphragm.

See section *9. Maintenance*.

7.3.4 Disposal

Disposal of the pump:

- After cleaning (see above), dispose of the pump in accordance with the relevant regulations.

8. Operation

Caution

In the event of a diaphragm leakage, the dosing liquid may leak out of the hole in the intermediate flange between the pump and the dosing head. The parts inside the housing are protected from the dosing liquid for a short time (depending on the type of liquid) by the housing sealing. It is necessary to check regularly (daily) if liquid is leaking out of the intermediate flange.

For maximum safety, we recommend the pump version with diaphragm leakage detection.

8.1 Control and display elements

8.1.1 Stroke-length adjustment

Caution

Adjust the stroke length only while the pump is running!

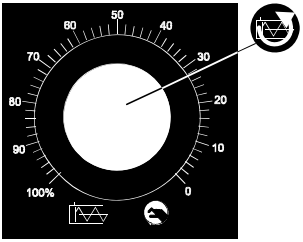

TM03 6248 4506

Fig. 38 Stroke-length adjustment knob

8.1.2 Control and display elements for pumps with control unit

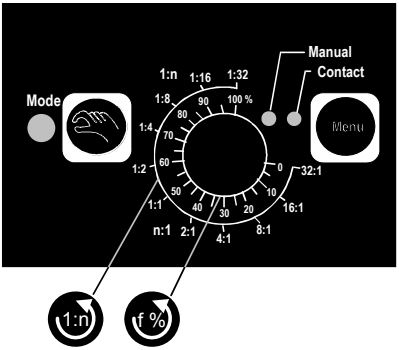

TM03 6249 4506

Fig. 39 Display of pumps with control unit

Element	Description
	Light-emitting diode (LED) • Lights up red when the pump is stopped. • Lights up green when the pump is started and briefly turns off during a suction stroke. • Flashes red if an error signal is present.
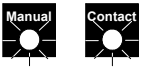	Manual / Contact LEDs • Either "Manual" or "Contact" lights up green, depending on the operating mode.
	"Continuous operation" button for continuous operation.
	Use the "Menu/Info" button to switch between the operating modes.
	For setting the dosing flow in "Manual control" ("Manual") or "Contact signal control" ("Contact") mode.

8.2 Switching on/off

Caution

Before switching on the pump, check that it is installed correctly. Refer to sections 5. Installation and 7.1 Initial start-up / subsequent start-up.

8.2.1 Switching on the pump

- Switch on the power supply.

8.2.2 Switching off the pump

- Switch off the power supply.

8.3 Operating the pump with control unit

8.3.1 Continuous operation

For suction or deaeration, switch the pump to continuous operation, without modifying the selected operating mode and dosing flow settings.

The pump doses at maximum stroke rate. The stroke length remains the same.

- Press the "continuous operation" button.

8.3.2 Selecting the operating mode

The available operating modes are "Manual control" and "Contact signal control".

Use the "Menu/Info" button to switch between the operating modes.

- Press the "Menu/Info" button and keep it pressed for approximately 2 seconds.
  - The LED for the new operating mode flashes and then lights up continuously after approximately 2 seconds. The LED for the old operating mode turns off.

The selected operating mode is indicated by the relevant LED.

8.3.3 Setting the dosing flow in "Manual control" mode

Note

In general, keep the stroke length setting as high as possible, and adjust the flow rate using the stroke frequency.

In "Manual control" mode, set the desired dosing flow by modifying the stroke frequency in the range between 0 % and 100 %. The internal scale applies.

8.3.4 Setting the dosing flow in "Contact signal control" mode

Note

In general, keep the stroke length setting as high as possible, and adjust the flow rate using the stroke frequency.

In "Contact signal control" mode, set the desired dosing flow by modifying the number of strokes per contact signal received. The external scale applies.

Setting	Function	Number of strokes per contact signal
1:1	1:1	The pump makes one dosing stroke per contact signal received.
1:n	Multiplier	The pump makes the set number of dosing strokes per contact signal received, e.g. 16 strokes per contact signal for the setting 1:16.
n:1	Divisor	The pump makes one dosing stroke after the set number of contact signals has been received, e.g. one stroke for every 4 contact signals for the setting 4:1.

Even if the pump receives more contact signals than it can process at maximum stroke frequency, the pump runs for as long as possible in continuous operation with a maximum stroke frequency.

8.3.5 Memory function

Contact signals, which cannot be processed immediately, can be stored and subsequently made available to the pump for processing. A maximum of 65,000 contact signals can be stored.

Switching on the memory function

The memory function must be switched on immediately when activating "Contact signal control" mode.

The pump is in "Manual" mode.

Press the "Menu/Info" button and keep it pressed for approximately 10 seconds.

- The "Contact" LED flashes and then lights up continuously after approximately 2 seconds. The "Manual" LED turns off.
- After approximately 10 seconds, the "Contact" LED flashes.
- The selected operating mode is indicated by the relevant LED.
  - The memory function is activated.

Switching off the memory function

Press the "Menu/Info" button and keep it pressed for approximately 2 seconds.

- The "Manual" LED then lights up continuously after approximately 2 seconds. The "Contact" LED turns off.
  - The pump is in "Manual" mode.
  - The contents of the memory are deleted.
  - The memory function is deactivated.
- The contents of the memory are not deleted by:
  - remote on/off
  - pressing the "Continuous operation" button.

8.4 Adjusting and locking the stroke length

Caution

Adjust the stroke length only while the pump is running!

Adjust the stroke length manually by turning the knob!

Follow the notes for stroke-length adjustment for the relevant pump type!

1. Remove the covering cap from the front of the stroke-length adjustment knob.
2. Use a screwdriver to loosen the locking screw by approximately 2 turns.
3. Increase/reduce the dosing flow while the pump is running.
4. Slowly turn the adjustment knob to the left/right to set the desired dosing volume.
5. Depending on the application, tighten the locking screw so that the adjustment knob can still be turned/cannot be turned any more.
6. Replace the covering cap.

8.5 Notes for stroke-length adjustment

Note

In general, keep the stroke length setting as high as possible, and adjust the flow rate using the stroke frequency.

8.5.1 For automatic deaeration

Caution

Do not set the stroke length to less than 40 %.

Set lower flow rates by reducing the stroke frequency!

- Dosing flow between 40 % and 100 %:
  - ideal operating range: quick deaeration, only brief interruption in dosing.
  - Over 80 %, the flow rate only increases very slightly.
- Dosing flow between 20 % and 40 %:
  - deaeration is slower and unsteady.
- Dosing flow less than 20 %:
  - automatic deaeration impossible or limited.

8.5.2 With Plus^3 system

Caution

Refer to the following table with minimum stroke settings for various pump types and dosing media at an ambient temperature of approximately 25 °C. For higher temperatures, increase the stroke setting.

Type	Minimum stroke setting	Maximum counter-pressure
Degassing media* (e.g. chlorine bleaching agents)		
DMI 0.3-10 Plus^3	100 %	1.5 bar (e.g. injection unit)
DMI 0.8-16 Plus^3	100 %	16 bar
DMI 1.0-10 Plus^3	80 %	10 bar
DMI 1.1-16 Plus^3	80 %	16 bar
DMI 1.6-10 Plus^3	60 %	10 bar
DMI 3.0-10 Plus^3	20 %	10 bar
DMI 3.6-16 Plus^3	40 %	16 bar
DMI 4.0-8 Plus^3	20 %	6 bar
DMI 6.0-8 Plus^3	10 %	8 bar
Non-degassing media* (e.g. PAC)		
DMI 0.3-10 Plus^3	10 %	10 bar
Other types	No restriction to the stroke setting	

* Except for H_2O_2, peracetic acid and other highly degassing media, use a dosing head with automatic deaeration for degassing media.

8.6 Adjusting the zero point

The zero point (no dosing) of the dosing pump is factory-set to a counter-pressure of 3-4 bar. If the operating counter-pressure at the injection unit deviates considerably from this value, it is advisable to readjust the zero point to obtain more precise values.

Note ***Always adjust the value with the discharge line connected and with operating counter-pressure.***

1. Connect the calibration tube to the dosing head on the suction side (except for Plus^3 system).
2. Start the dosing pump.
3. Set the dosing flow to 15 %.

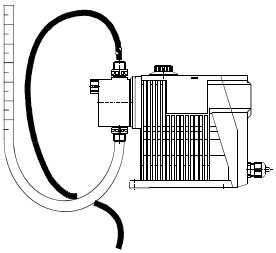

TM03 6261 4506

Fig. 40 Pump with calibration tube

Note ***Suction line with reed contact empty signal must remain in the dosing tank!***

4. Remove the covering cap from the front of the stroke-length adjustment knob.
5. Use a screwdriver to remove the locking screw.
6. Turn the adjustment knob slowly clockwise (towards the zero point) until the medium level stops falling in the calibration tube.
7. Remove the adjustment knob by pulling it up, and then reinsert it in the slot so that the indicator on the adjustment knob points to the zero point.
8. Then tighten the locking screw so that the adjustment knob can still be turned.

8.7 Calibrating the dosing flow with Plus^3 system

For pumps with Plus^3 system, the current dosing flow can be checked during operation.

Warning

Do not let the calibration tube (E) run empty!

Re-open the isolating valve (D) in due time!

1. Close the isolating valve (D) at the calibration tube (E).
2. The supply from the priming chamber (F) is shut off and the calibration tube (E) is slowly emptied.
3. Using a stop watch, measure the time (t in seconds) it takes to dose 5 or 10 ml of dosing medium, depending on pump type.
4. Re-open the isolating valve (D) at the calibration tube (E).
5. Calculate the dosing flow:

$$V = \frac{5\ \text{ml}}{t} = \frac{18}{t}\left[\frac{l}{h}\right] \qquad V = \frac{5\ \text{ml}}{t} = \frac{18}{t}\left[\frac{l}{h}\right]$$

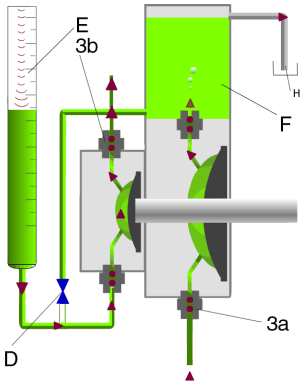

TM03 6262 4506

Fig. 41 Pump with calibration tube

8.8 Pumps with manual deaeration

Manual deaeration of the dosing head (while the pump is running)

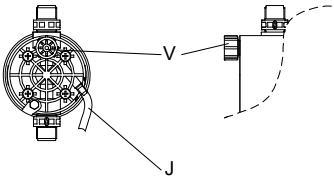

TM03 6263 4506

Fig. 42 Manual deaeration of the dosing head

1. Open the deaeration valve (V) of the dosing head by approximately 1 turn (2 turns with Plus^3 system).
2. Press the "Start/Stop" button and keep it pressed.
   – The pump switches to continuous operation.
3. Leave the pump running until the medium flowing from the deaeration line (J) is free of air bubbles.
4. Carefully close the deaeration valve.

8.9 Changing the tank with Plus^3 system

For pumps with Plus^3 system, the tank can also be changed during operation by using the supply of dosing medium in the priming chamber.

Warning

The dosing medium is constantly supplied from the overflow line while the pump is running. Take suitable steps to ensure that the dosing medium is safely collected!

Warning

Risk of chemical burns!

Wear protective clothing (gloves and goggles) when working on the dosing head, connections or lines!

Caution ***Do not let the calibration tube (E) run empty!***

Changing the tank

1. Remove the suction line, overflow line and deaeration line from the empty tank.
   – The dosing medium is then supplied from the tank (F).
2. Insert the suction line, overflow line and deaeration line into the new tank.
3. Do not immerse the overflow line and deaeration line in the dosing medium. Route the lines downwards and without loops.

Note ***There is only a limited amount of time available to change the tank, depending on the pump type and dosing flow, e.g. 30 seconds at a dosing flow of 6 l/h!***

If air has been sucked in, briefly increase the stroke setting to 100 % and switch the pump to continuous operation.

9. Maintenance

Caution ***In the event of a diaphragm leakage, the dosing liquid may leak out of the hole in the intermediate flange between the pump and the dosing head. The parts inside the housing are protected from the dosing liquid for a short time (depending on the type of liquid) by the housing sealing. It is necessary to check regularly (daily) if liquid is leaking out of the intermediate flange.***

For maximum safety, we recommend the pump version with diaphragm leakage detection.

9.1 General notes

Warning

When dosing dangerous media, observe the corresponding safety precautions!

Risk of chemical burns!

Wear protective clothing (gloves and goggles) when working on the dosing head, connections or lines!

Do not allow any chemicals to leak from the pump. Collect and dispose of all chemicals correctly!

Warning

The pump housing must only be opened by personnel authorised by Grundfos Alldos!

Repairs must only be carried out by authorised and qualified personnel!

Switch off the pump and disconnect it from the power supply before carrying out maintenance work and repairs!

9.2 Maintenance intervals

- At least every 12 months or after 4000 operating hours. When dosing crystallising liquids, more frequently.
- In the event of a fault.

9.2.1 Cleaning the valves and diaphragm

- Clean the diaphragm and valves and replace, if necessary (for stainless-steel valves: inner valve parts).

9.3 Cleaning suction and discharge valves

Note ***If possible, rinse the dosing head, e.g. by supplying it with water.***

9.3.1 Switching off the pump

1. Switch off the pump and disconnect it from the power supply.
2. Depressurise the system.
3. Take suitable steps to ensure that the returning dosing medium is safely collected.

9.3.2 Unscrewing the priming chamber valve (Plus^3 system)

When using the Plus^3 system, unscrew the priming chamber valve (3c) as follows:

1. Remove the cover (L) from the priming chamber.
2. Remove the valve tube (R) with the valve (3c).
3. Unscrew the valve (3c) from the valve tube.

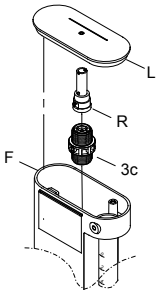

TM03 6264 4506

Fig. 43 Priming chamber valve

9.3.3 Unscrewing suction and discharge valves/ cleaning valves

1. Unscrew the suction and discharge valves.
2. Dismantle the inner valve parts:

- Standard DN 4/DN 8 valve:
  - – Carefully push out the inner valve part using a thin wire nail (or paper clip) in the flow direction (see arrow on the valve body).
  - – Dismantle the inner parts: seat (4r), O-ring (1r), balls (3r), ball cages (2r).

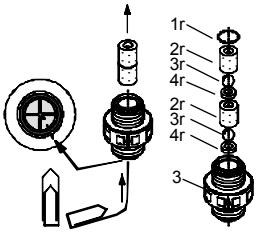

TM03 6265 4506

Fig. 44 Standard DN 4/DN 8 valve

- Spring-loaded DN 4/DN 8 valve:
  - – Unscrew the valve cover.
  - – Dismantle the inner parts (as shown in fig. 45).

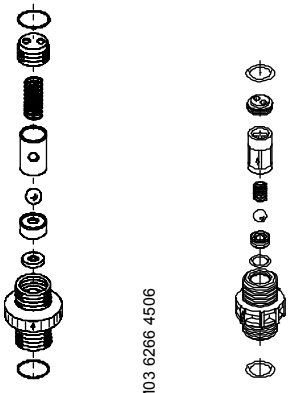

DN 4 TM03 6266 4506 DN 8 TM03 6267 4506

Fig. 45 Spring-loaded DN 4 valve / spring-loaded DN 8 valve

3. Clean all parts.

If faulty parts are detected, proceed as follows:

- – Replace the valve (for stainless-steel valves: inner valve parts).
  For contents and order numbers of the spare parts kits, contact Grundfos Alldos.

4. Re-assemble and refit the valve.
5. Remove the deaeration cartridge (1p, 2p, 3p) under the discharge valve from the dosing head using a pair of tweezers.
   - – Dismantle the cartridge.
   - – Clean the cartridge.

If faulty parts are detected, proceed as follows:

- – Replace the deaeration cartridge.
  For contents and order numbers of the spare parts kits, contact Grundfos Alldos.
- – Re-assemble the cartridge.

6. Refit all parts.

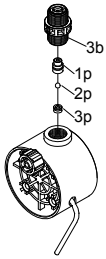

TM03 6268 4506

Fig. 46 Standard DN 4/DN 8 valve

The O-rings must be correctly placed in the specified groove.

Caution ***Observe the flow direction (indicated by an arrow)!***

Only tighten the valve by hand.

9.4 Replacing the diaphragm

Note

If possible, rinse the dosing head, e.g. by supplying it with water.

9.4.1 Switching off the pump

1. While the pump is running, set the stroke-length adjustment knob to 100 %.
2. Switch off the pump and disconnect it from the power supply.
3. Depressurise the system.
4. Take suitable steps to ensure that the returning dosing medium is safely collected.

9.4.2 Replacing the diaphragm

See fig. 47 or 48.

1. Loosen the four screws (1q + 2q) on the dosing head (2).
2. Remove the dosing head (2).
3. Unscrew the diaphragm (Q) counter-clockwise.
   – For pumps without Plus^3 system:
   Replace the sealing diaphragm (3q), intermediate ring (4q) and support disk (5q).
4. Screw in the new diaphragm (Q).
5. Start/stop the pump briefly so that the diaphragm is set to the back dead point (end of suction stroke).
6. Replace the dosing head (2) and cross-tighten the screws (1q + 2q).
   Maximum torque:
   DMI 0.3 - DMI 6.0: 2.1 Nm.
   DMI 9.0 - DMI 18: 2.5 Nm.
7. Vent and start up the dosing pump.

Caution

After initial start-up and after each time the diaphragm is changed, tighten the dosing head screws.

After approximately 6-10 operating hours or two days, cross-tighten the dosing head screws using a torque wrench.

Maximum torque:
DMI 0.3 - DMI 6.0: 2.1 Nm.
DMI 9.0 - DMI 18: 2.5 Nm.

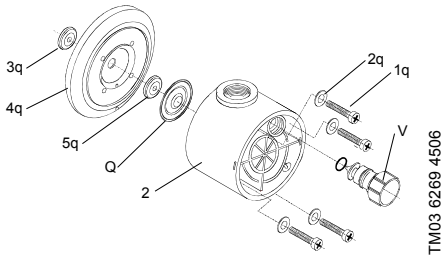

Fig. 47 Replacing diaphragm without Plus^3 system

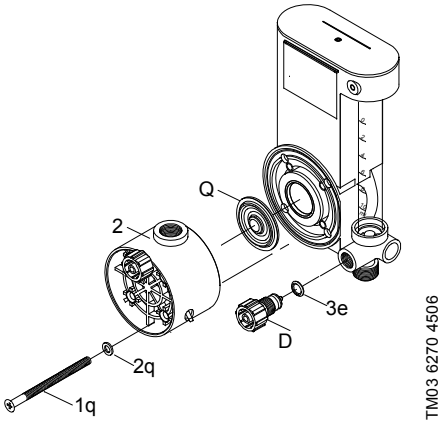

Fig. 48 Replacing diaphragm with Plus^3 system

10. Fault finding chart

Fault	Cause	Remedy
1. Dosing pump does not run.	a) Not connected to the mains.	Connect the power supply cable.
	b) Incorrect mains voltage.	Switch off the pump. Check voltage and motor. If the motor is faulty, return the pump for repair.
	c) Electrical failure.	Return the pump for repair.
2. Dosing pump does not suck in.	a) Leaking suction line.	Replace or seal the suction line.
	b) Cross-section of the suction line too small or suction line too long.	Check with Grundfos specification.
	c) Clogged suction line.	Rinse or replace the suction line.
	d) Foot valve covered by sediment.	Suspend the suction line from a higher position.
	e) Buckled suction line.	Install the suction line correctly. Check for damage.
	f) Crystalline deposits in the valves.	Clean the valves.
	g) Diaphragm broken or diaphragm tappet torn out.	Replace the diaphragm.
	h) Empty dosing tank.	Fill the dosing tank.
3. Dosing pump does not dose.	a) Air in the suction line and dosing head.	Fill the dosing head and suction line.
	b) Viscosity or density of medium too high.	Check the installation.
	c) Crystalline deposits in the valves.	Clean the valves.
	d) Valves not correctly assembled.	Assemble the inner valve parts in the right order and check or possibly correct the flow direction.
	e) Injection unit blocked.	Check and possibly correct the flow direction, or remove the obstruction.
	f) Incorrect installation of lines and peripheral equipment.	Check the lines for free passage and correct installation.
	g) Empty dosing tank.	Fill the dosing tank.
	h) Sealing elements not chemically resistant.	Replace sealing elements.

Fault	Cause	Remedy
4. Dosing flow of the pump is inaccurate.	a) Dosing head not fully deaerated.	Repeat the deaeration.
	b) Degassing medium.	Check the installation.
	c) Parts of the valves covered in dirt or incrusted.	Clean the valves.
	d) Counter-pressure fluctuations.	Install a pressure-loading valve and a pulsation damper, if necessary.
	e) Suction lift fluctuations.	Keep the suction level constant.
	f) Siphon effect (inlet pressure higher than counter-pressure).	Install a pressure-loading valve.
	g) Leaking or porous suction line or discharge line.	Replace the suction line or discharge line.
	h) Parts in contact with the medium are not resistant to it.	Replace with resistant materials.
	i) Dosing diaphragm worn (incipient tears).	Replace the diaphragm. Also observe the maintenance instructions.
	j) Variation of the dosing medium (density, viscosity).	Check the concentration. Use an agitator, if necessary.
5. Liquid leaks out of the hole in the intermediate flange between the pump and the dosing head.	a) A diaphragm leakage has occurred.	Replace the diaphragm.

Note ***For further error signals for the control unit, refer to the relevant section.***

11. Dosing curves

The dosing curves apply to:

- water as dosing medium
- suction line with foot valve, suction lift of 0.5 m WC
- zero point of the dosing pump at a counter-pressure of 3 bar.

Abbreviation	Description
Q	Dosing flow
h	Stroke length

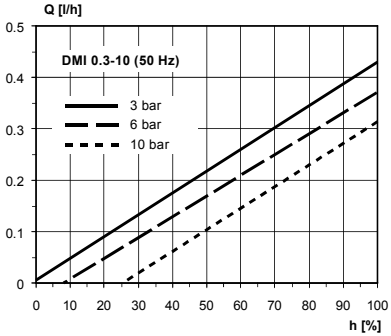

TM03 6271 4506

Fig. 49 DMI 3.0-10 (50 Hz)

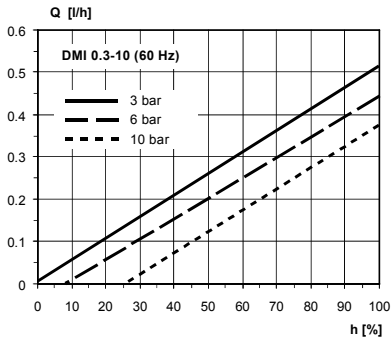

TM03 6272 4506

Fig. 50 DMI 3.0-10 (60 Hz)

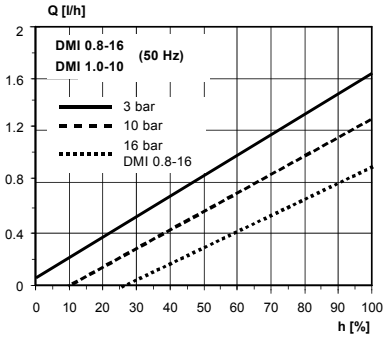

TM03 6273 4506

Fig. 51 DMI 0.8-16 / DMI 1.0-10 (50 Hz)

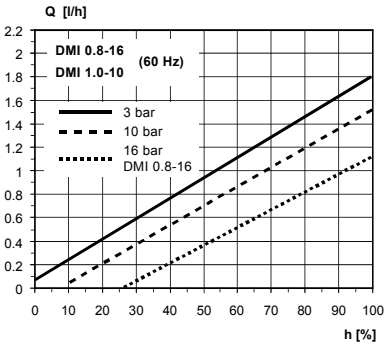

TM03 6274 4506

Fig. 52 DMI 0.8-16 / DMI 1.0-10 (60 Hz)

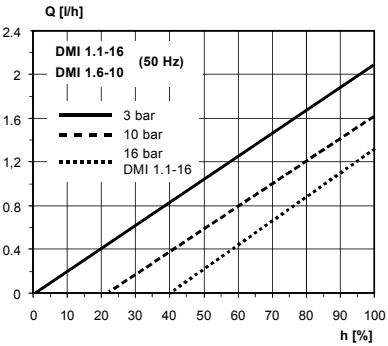

TM03 6275 4506

Fig. 53 DMI 1.1-16 / DMI 1.6-10 (50 Hz)

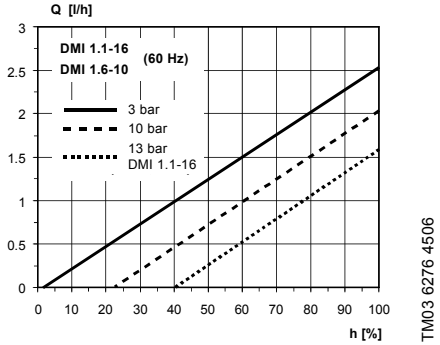

Fig. 54 DMI 1.1-16 / DMI 1.6-10 (60 Hz)

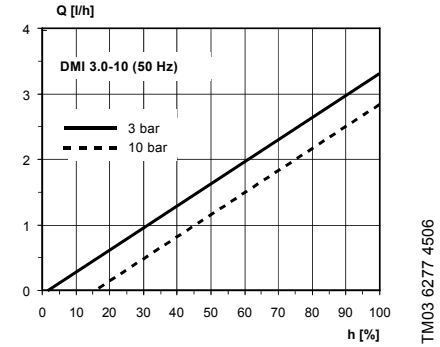

Fig. 55 DMI 3.0-10 (50 Hz)

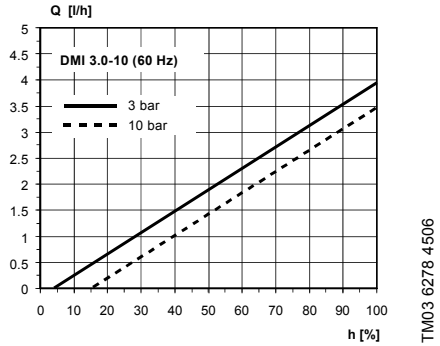

Fig. 56 DMI 3.0-10 (60 Hz)

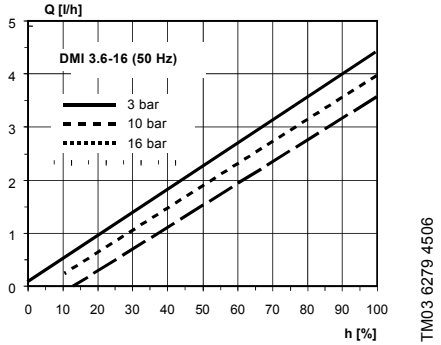

Fig. 57 DMI 3.6-16 (50 Hz)

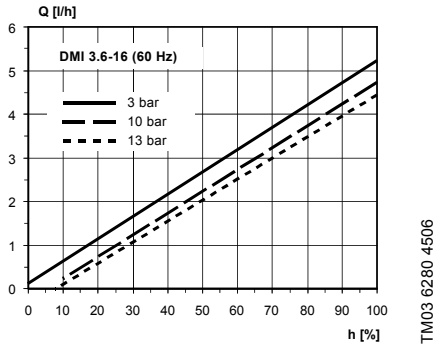

Fig. 58 DMI 3.6-16 (60 Hz)

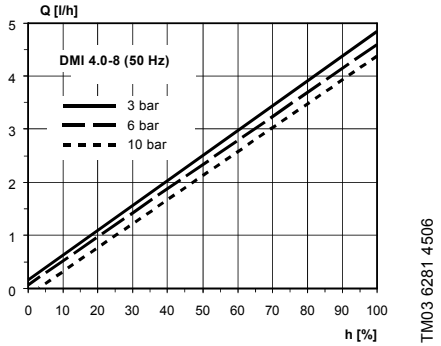

Fig. 59 DMI 4.0-8 (50 Hz)

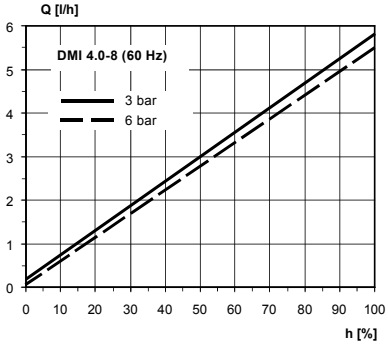

TM03 6282 4506

Fig. 60 DMI 4.0-8 (60 Hz)

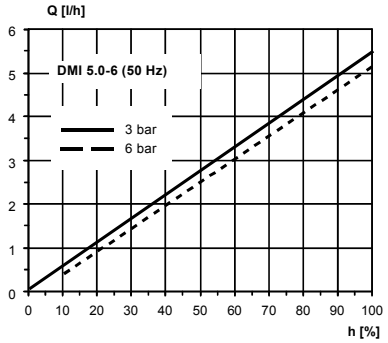

TM03 6283 4506

Fig. 61 DMI 5.0-6 (50 Hz)

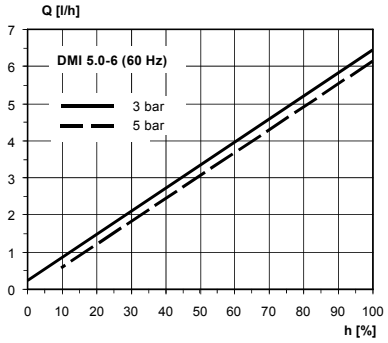

TM03 6284 4506

Fig. 62 DMI 5.0-6 (60 Hz)

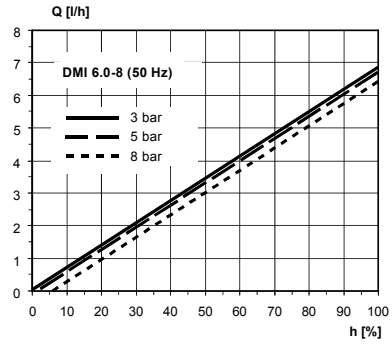

TM03 6285 4506

Fig. 63 DMI 6.0-8 (50 Hz)

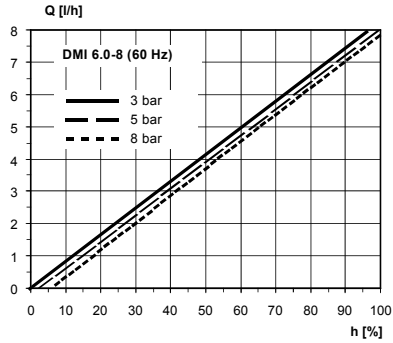

TM03 6286 4506

Fig. 64 DMI 6.0-8 (60 Hz)

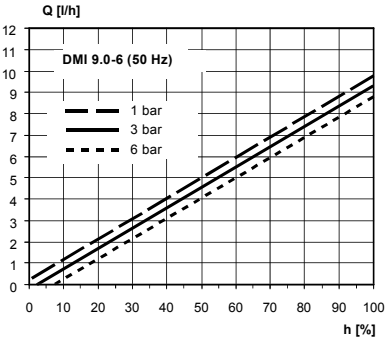

TM03 6287 4506

Fig. 65 DMI 9.0-6 (50 Hz)

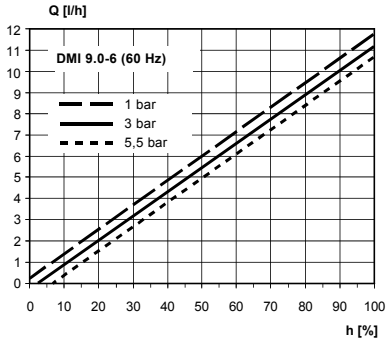

TM03 6288 4506

Fig. 66 DMI 9.0-6 (60 Hz)

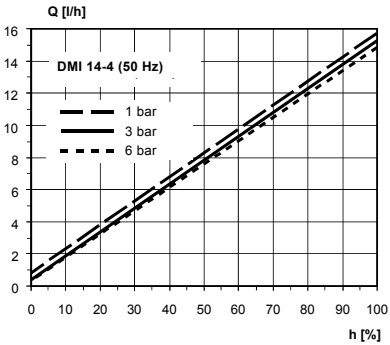

TM03 6289 4506

Fig. 67 DMI 14-4 (50 Hz)

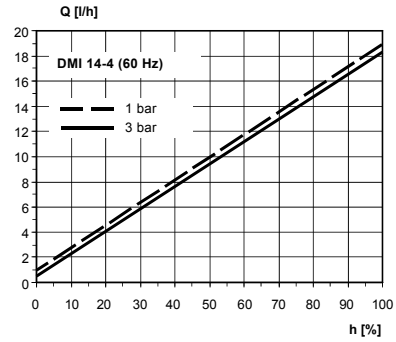

TM03 6290 4506

Fig. 68 DMI 14-4 (60 Hz)

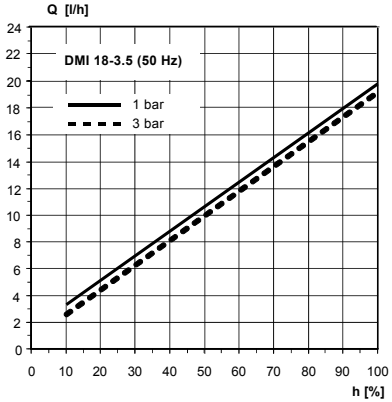

TM03 6291 4506

Fig. 69 DMI 18-3.5 (50 Hz)

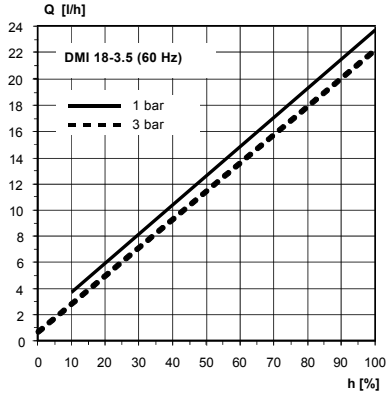

TM03 6292 4506

Fig. 70 DMI 18-3.5 (60 Hz)

12. Disposal

This product or parts of it must be disposed of in an environmentally sound way. Use appropriate waste collection services. If this is not possible, contact the nearest Grundfos company or service workshop.

Subject to alterations.

Argentina
Bombas GRUNDFOS de Argentina S.A.
Ruta Panamericana km. 37.500 Lote 34A
1619 - Garin
Pcia. de Buenos Aires
Phone: +54-3327 414 444
Telefax: +54-3327 411 111

Australia
GRUNDFOS Pumps Pty. Ltd.
P.O. Box 2040
Regency Park
South Australia 5942
Phone: +61-8-8461-4611
Telefax: +61-8-8340 0155

Austria
GRUNDFOS Pumpen Vertrieb Ges.m.b.H.
Grundfosstraße 2
A-5082 Grödig/Salzburg
Tel.: +43-6246-883-0
Telefax: +43-6246-883-30

Belgium
N.V. GRUNDFOS Bellux S.A.
Boomsesteenweg 81-83
B-2630 Aartselaar
Tél.: +32-3-870 7300
Télécopie: +32-3-870 7301

Belarus
Представительство ГРУНДФОС в Минске
220123, Минск,
ул. В. Хоружей, 22, оф. 1105
Тел.: +(375) 17 233 97 65
Факс: (375) 17 233 97 69
E-mail: grundfos_minsk@mail.ru

Bosnia/Herzegovina
GRUNDFOS Sarajevo
Trg Heroja 16,
BiH-71000 Sarajevo
Phone: +387 33 713 290
Telefax: +387 33 659 079
e-mail: grundfos@bih.net.ba

Brazil
BOMBAS GRUNDFOS DO BRASIL
Av. Humberto de Alencar Castelo Branco, 630
CEP 09850 - 300
São Bernardo do Campo - SP
Phone: +55-11 4393 5533
Telefax: +55-11 4343 5015

Bulgaria
Grundfos Bulgaria EOOD
Slatina District
Iztochna Tangenta street no. 100
BG - 1592 Sofia
Tel. +359 2 49 22 200
Fax. +359 2 49 22 201
email: bulgaria@grundfos.bg

Canada
GRUNDFOS Canada Inc.
2941 Brighton Road
Oakville, Ontario
L6H 6C9
Phone: +1-905 829 9533
Telefax: +1-905 829 9512

China
Grundfos Alldos Dosing & Disinfection
ALLDOS (Shanghai) Water Technology Co. Ltd.
West Unit, 1 Floor, No. 2 Building (T 4-2)
278 Jinhu Road, Jin Qiao Export Processing Zone
Pudong New Area
Shanghai, 201206
Phone: +86 21 5055 1012
Telefax: +86 21 5032 0596
E-mail: grundfosalldos-CN@grundfos.com

China
GRUNDFOS Pumps (Shanghai) Co. Ltd.
50/F Maxdo Centre No. 8 Xing Yi Rd.
Hongqiao Development Zone
Shanghai 200336
PRC
Phone: +86-21 6122 5222
Telefax: +86-21 6122 5333

Croatia
GRUNDFOS CROATIA d.o.o.
Cebini 37, Buzin
HR-10010 Zagreb
Phone: +385 1 6595 400
Telefax: +385 1 6595 499
www.grundfos.hr

Czech Republic
GRUNDFOS s.r.o.
Čapkovského 21
779 00 Olomouc
Phone: +420-585-716 111
Telefax: +420-585-716 299

Denmark
GRUNDFOS DK A/S
Martin Bachs Vej 3
DK-8850 Bjerringbro
Tlf.: +45-87 50 50 50
Telefax: +45-87 50 51 51
E-mail: info_GDK@grundfos.com
www.grundfos.com/DK

Estonia
GRUNDFOS Pumps Eesti OÜ
Peterburi tee 92G
11415 Tallinn
Tel: + 372 606 1690
Fax: + 372 606 1691

Finland
OY GRUNDFOS Pumput AB
Mestarintie 11
FIN-01730 Vantaa
Phone: +358-3066 5650
Telefax: +358-3066 56550

France
Pompes GRUNDFOS Distribution S.A.
Parc d'Activités de Chesnes
57, rue de Malacombe
F-38290 St. Quentin Fallavier (Lyon)
Tél.: +33-4 74 82 15 15
Télécopie: +33-4 74 94 10 51

Germany
GRUNDFOS Water Treatment GmbH
Reetzstraße 85
D-76327 Pfinztal (Söllingen)
Tel.: +49 7240 61-0
Telefax: +49 7240 61-177
E-mail: gwt@grundfos.com

Germany
GRUNDFOS GMBH
Schlüterstr. 33
40699 Erkrath
Tel.: +49-(0) 211 929 69-0
Telefax: +49-(0) 211 929 69-3799
E-mail: infoservice@grundfos.de
Service in Deutschland:
E-mail: kundendienst@grundfos.de

Greece
GRUNDFOS Hellas A.E.B.E.
20th km. Athinon-Markopoulou Av.
P.O. Box 71
GR-19002 Peania
Phone: +0030-210-66 83 400
Telefax: +0030-210-66 46 273

Hong Kong
GRUNDFOS Pumps (Hong Kong) Ltd.
Unit 1, Ground floor
Siu Wai Industrial Centre
29-33 Wing Hong Street &
68 King Lam Street, Cheung Sha Wan
Kowloon
Phone: +852-27861706 / 27861741
Telefax: +852-27858664

Hungary
GRUNDFOS Hungária Kft.
Park u. 8
H-2045 Törökbálint,
Phone: +36-23 511 110
Telefax: +36-23 511 111

India
GRUNDFOS Pumps India Private Limited
118 Old Mahabalipuram Road
Thoraipakkam
Chennai 600 097
Phone: +91-44 4596 6800

Indonesia
PT GRUNDFOS Pompa
Jl. Rawa Sumur III, Blok III / CC-1
Kawasan Industri, Pulogadung
Jakarta 13930
Phone: +62-21-460 6909
Telefax: +62-21-460 6910 / 460 6901

Ireland
GRUNDFOS (Ireland) Ltd.
Unit A, Merrywell Business Park
Ballymount Road Lower
Dublin 12
Phone: +353-1-4089 800
Telefax: +353-1-4089 830

Italy
GRUNDFOS Pompe Italia S.r.l.
Via Gran Sasso 4
I-20060 Truccazzano (Milano)
Tel.: +39-02-95838112
Telefax: +39-02-95309290 / 95838461

Japan
GRUNDFOS Pumps K.K.
Gotanda Metalion Bldg. 5F,
5-21-15, Higashi-gotanda
Shiagawa-ku, Tokyo,
141-0022 Japan
Phone: +81 35 448 1391
Telefax: +81 35 448 9619

Korea
GRUNDFOS Pumps Korea Ltd.
6th Floor, Aju Building 679-5
Yeoksam-dong, Kangnam-ku, 135-916
Seoul, Korea
Phone: +82-2-5317 600
Telefax: +82-2-5633 725

Latvia
SIA GRUNDFOS Pumps Latvia
Deglava biznesa centrs
Augusta Deglava ielā 60, LV-1035, Rīga,
Tālr.: + 371 714 9640, 7 149 641
Fakss: + 371 914 9646

Lithuania
GRUNDFOS Pumps UAB
Smolensko g. 6
LT-03201 Vilnius
Tel: + 370 52 395 430
Fax: + 370 52 395 431

Malaysia
GRUNDFOS Pumps Sdn. Bhd.
7 Jalan Peguam U1/25
Glenmarie Industrial Park
40150 Shah Alam
Selangor
Phone: +60-3-5569 2922
Telefax: +60-3-5569 2866

Mexico
Bombas GRUNDFOS de México S.A. de C.V.
Boulevard TLC No. 15
Parque Industrial Stiva Aeropuerto
Apodaca, N.L. 66600
Phone: +52-81-8144 4000
Telefax: +52-81-8144 4010

Netherlands
GRUNDFOS Netherlands
Veluwezoom 35
1326 AE Almere
Postbus 22015
1302 CA ALMERE
Tel.: +31-88-478 6336
Telefax: +31-88-478 6332
E-mail: info_gnl@grundfos.com

New Zealand
GRUNDFOS Pumps NZ Ltd.
17 Beatrice Tinsley Crescent
North Harbour Industrial Estate
Albany, Auckland
Phone: +64-9-415 3240
Telefax: +64-9-415 3250

Norway
GRUNDFOS Pumper A/S
Strømsveien 344
Postboks 235, Leirdal
N-1011 Oslo
Tlf.: +47-22 90 47 00
Telefax: +47-22 32 21 50

Poland
GRUNDFOS Pompy Sp. z o.o.
ul. Klonowa 23
Baranowo k. Poznania
PL-62-081 Przeźmierowo
Tel: (+48-61) 650 13 00
Fax: (+48-61) 650 13 50

Portugal
Bombas GRUNDFOS Portugal, S.A.
Rua Calvet de Magalhães, 241
Apartado 1079
P-2770-153 Paço de Arcos
Tel.: +351-21-440 76 00
Telefax: +351-21-440 76 90

Romania
GRUNDFOS Pompe România SRL
Bd. Biruintei, nr 103
Pantelimon county Ilfov
Phone: +40 21 200 4100
Telefax: +40 21 200 4101
E-mail: romania@grundfos.ro

Russia
ООО Грундфос
Россия, 109544 Москва, ул. Школьная 39
Тел. (+7) 495 737 30 00, 564 88 00
Факс (+7) 495 737 75 36, 564 88 11
E-mail grundfos.moscow@grundfos.com

Serbia
GRUNDFOS Predstavništvo Beograd
Dr. Milutina Ivkovića 2a/29
YU-11000 Beograd
Phone: +381 11 26 47 877 / 11 26 47 496
Telefax: +381 11 26 48 340

Singapore
GRUNDFOS (Singapore) Pte. Ltd.
24 Tuas West Road
Jurong Town
Singapore 638381
Phone: +65-6865 1222
Telefax: +65-6861 8402

Slovenia
GRUNDFOS d.o.o.
Šlandrova 8b, SI-1231 Ljubljana-Črnuče
Phone: +386 1 568 0610
Telefax: +386 1 568 0619
E-mail: slovenia@grundfos.si

South Africa
Grundfos (PTY) Ltd.
Corner Mountjoy and George Allen Roads
Wilbart Ext. 2
Bedfordview 2008
Phone: (+27) 11 579 4800
Fax: (+27) 11 455 6066
E-mail: lsmart@grundfos.com

Spain
Bombas GRUNDFOS España S.A.
Camino de la Fuentecilla, s/n
E-28110 Algete (Madrid)
Tel.: +34-91-848 8800
Telefax: +34-91-628 0465

Sweden
GRUNDFOS AB
(Box 333) Lunnagårdsgatan 6
431 24 Mölndal
Tel.: +46 31 332 23 000
Telefax: +46 31-331 94 60

Switzerland
GRUNDFOS ALLDOS International AG
Schönmattstraße 4
CH-4153 Reinach
Tel.: +41-61-717 5555
Telefax: +41-61-717 5500
E-mail: grundfosalldos-CH@grund-fos.com

Switzerland
GRUNDFOS Pumpen AG
Bruggacherstrasse 10
CH-8117 Fällanden/ZH
Tel.: +41-1-806 8111
Telefax: +41-1-806 8115

Taiwan
GRUNDFOS Pumps (Taiwan) Ltd.
7 Floor, 219 Min-Chuan Road
Taichung, Taiwan, R.O.C.
Phone: +886-4-2305 0868
Telefax: +886-4-2305 0878

Thailand
GRUNDFOS (Thailand) Ltd.
92 Chaloem Phrakiat Rama 9 Road,
Dokmai, Pravej, Bangkok 10250
Phone: +66-2-725 8999
Telefax: +66-2-725 8998

Turkey
GRUNDFOS POMPA San. ve Tic. Ltd. Sti.
Gebze Organize Sanayi Bölgesi
Ihsan dede Caddesi,
2. yol 200. Sokak No. 204
41490 Gebze/ Kocaeli
Phone: +90 - 262-679 7979
Telefax: +90 - 262-679 7905
E-mail: satis@grundfos.com

Ukraine
ТОВ ГРУНДФОС УКРАЇНА
01010 Київ, Вул. Московська 8б,
Тел.:(+38 044) 390 40 50
Фах.: (+38 044) 390 40 59
E-mail: ukraine@grundfos.com

United Arab Emirates
GRUNDFOS Gulf Distribution
P.O. Box 16768
Jebel Ali Free Zone
Dubai
Phone: +971-4- 8815 166
Telefax: +971-4-8815 136

United Kingdom
GRUNDFOS Pumps Ltd.
Grovebury Road
Leighton Buzzard/Beds. LU7 8TL
Phone: +44-1525-850000
Telefax: +44-1525-850011

U.S.A.
GRUNDFOS Pumps Corporation
17100 West 118th Terrace
Olathe, Kansas 66061
Phone: +1-913-227-3400
Telefax: +1-913-227-3500

Uzbekistan
Представительство ГРУНДФОС в Ташкенте
700000 Ташкент ул.Усмана Носира 1-й тупик 5
Телефон: (3712) 55-68-15
Факс: (3712) 53-36-35

Addresses revised 27.04.2012

91834769 0812
ECM: 1097823

The name Grundfos, the Grundfos logo, and the payoff Be–Think–Innovate are registrated trademarks owned by Grundfos Management A/S or Grundfos A/S, Denmark. All rights reserved worldwide.